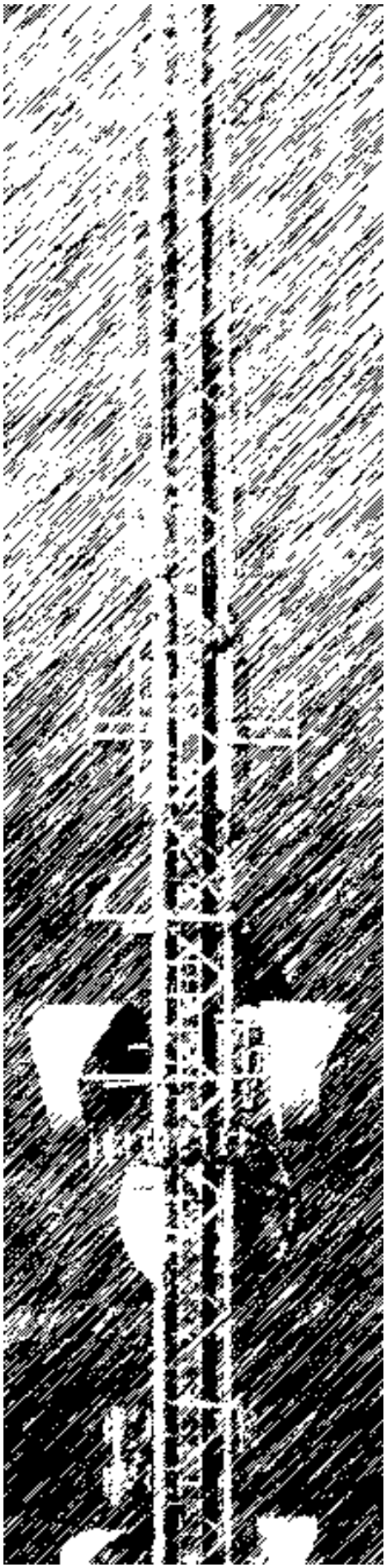

Antennas

Masts

Components

Design

Measurement

Testing

Installation

Aerial Oy reserves all rights to do product modifications due to constant R&D.

Aerial Oy

Box 22
04401 Järvenpää
Finland

Tel. +358 9 2790 120
Fax +358 9 2910 210

http://www.aerial.fi
aerial@aerial.fi

Introduction

You are now holding a collection of datasheets of telecommunication antenna, mast and cable products designed and produced or represented by Aerial Oy. The products listed here do form a backbone of the company's sales but a great number of the items are so unique, made only for one customer, that a datasheet does not exist. So if you do not find here what you are looking for, we would like to search for the best solution for you, or if needed - make a whole new design from scratch.

For datasheet updates please take a look at our web site at www.aerial.fi.

Aerial Oy in brief:

- Aerial Oy is a Finnish company which designs and produces professional telecommunication antenna and mast products in Järvenpää, Finland.
- Headquarters in Järvenpää, around 40 km from Helsinki city centre and 25 km from Helsinki-Vantaa airport. Production facilities cover an area of 3200 m².
- Founded in 1969 to meet the expanding needs of Scandinavian telecommunication industry. Today Aerial Oy has customers and partnership projects all over the world, for instance production of Finnish antenna design under licence in Pune, India. However the main market is still Northern Europe.
- Aerial Oy is specialized in making customer specific solutions within a reasonable time scale to ensure that the customer ideas and details are foreseen in full.
- Annual turnover is €10 million (EUR)
- 30 employees of which 15 persons are dedicated to engineering, sales, management and daily routines.
- Customers include: Nokia, Ericsson, Siemens, Sonera, Finnet, Radiolinja, Suomen 2G (dna), Finnish defence forces, Vaisala and Finnish aviation authority.
- Aerial Oy has retail dealers in the following countries: Sweden, Norway, Denmark, Russia, Estonia, Germany, Portugal and Greece.
- Aerial Oy represents Acome Hypercell ® cables and accessories in Finland.

Aerial Oy

Box 22
04401 Järvenpää
Finland

Tel. +358 9 2790 120
Fax +358 9 2910 210

http://www.aerial.fi
aerial@aerial.fi

Contact persons

- Commercial and general issues:

  Kari Tiihonen +358-9-27901227, Fax: +358-9-2910210
  Kristian Tiihonen +358-9-27901223, Fax: +358-9-2910210

- Technical sales and design (Antennas and antenna products):

  Kristian Tiihonen +358-9-27901223, Fax: +358-9-2910210
  Hannu Huhtamaa +358-9-27901250, Fax: +358-9-27901270

- Technical sales and design (Masts, masts products, steel structures and mounting accessories):

  Arno Tiihonen +358-9-27901224, Fax: +358-9-2910210
  Timo Friman +358-9-27901231, Fax: +358-9-27901260

- Mast and steel structure building/installations:

  Timo Friman +358-9-27901231, Fax: +358-9-27901260
  Veikko Niskanen +358-9-27901226, Fax: +358-50-80461968

- Deliveries and supervision of work:

  Yrjö Koski +358-9-27901241, Fax: +358-9-27901260

- Production measurements:

  Erkki Paavolainen +358-9-27901255, Fax: +358-9-27901270

- Office:

  Merja Lastuvuori +358-9-27901220, Fax: +358-9-2910210
  Pirjo Kavander +358-9-27901222, Fax: +358-9-2910210

- E-mail addresses and homepage:

  firstname.surname@aerial.fi

  www.aerial.fi

Yhteyshenkilöt

- Kaupalliset ja hallinnolliset asiat:

  Kari Tiihonen 09-27901227, Fax: 09-2910210
  Kristian Tiihonen 09-27901223, Fax: 09-2910210

- Tekninen myynti ja suunnittelu (Antennit ja antennitarvikkeet):

  Kristian Tiihonen 09-27901223, Fax: 09-2910210
  Hannu Huhtamaa 09-27901250, Fax: 09-27901270

- Tekninen myynti ja suunnittelu (Mastot, mastotarvikkeet, teräsrakenteet ja asennustarvikkeet):

  Arno Tiihonen 09-27901224, Fax: 09-2910210
  Timo Friman 09-27901231, Fax: 09-27901260

- Masto- ja terästyöt sekä asennukset:

  Timo Friman 09-27901231, Fax: 09-27901260
  Veikko Niskanen 09-27901226, Fax: 050-80461968

- Toimitukset ja työnjohto:

  Yrjö Koski 09-27901241, Fax: 09-27901260

- Tuotantomittaukset:

  Erkki Paavolainen 09-27901255, Fax: 09-27901270

- Toimisto:

  Merja Lastuvuori 09-27901220, Fax: 09-2910210
  Pirjo Kavander 09-27901222, Fax: 09-2910210

- Sähköpostit ja kotisivu:

  etunimi.sukunimi@aerial.fi

  www.aerial.fi

ANTENNA PRODUCT INQUIRY FORM

If among the products you have received infomation on are no antenna products that suit your application, please fill in the following inquiry form and let our R&D department find the best solutions for your needs.

1.Contact information	
Name	
Company/Country	
Telephone	
Fax	
E-mail	

2. General description of the problem / product and notes:

3. Product specifications:	Please fill in only if applicable (Aerial Oy will specify when left blank):
Frequency/frequencies (Hz)	
Bandwidth (Hz)	
Impedance (Ω)	
DC grounding (Yes/No)	
VSWR/Return loss (-/dB)	
Polarisation	
Single pol.:Polarisation discrimination (dB) Multi pol.: Port isolation (dB) Hybrids, Dividers,... etc: Isolation between ports (dB)	
Number of input/output ports	
Gain (dBi)	
E-plane 3 dB beamwidth/10 dB beamwidth (°)	
H-plane 3 dB beamwidth/10 dB beamwidth (°)	
Front to back ratio (dB)	
Max. Continuous power (W)	
RF-connector/connectors	
Wind area (m^2)	
Wind speed, operational (m/s)	
Wind speed, survival (m/s)	
Max. Dimensions (H x W x D) or (∅ x H)	
Weight (kg)	
Mounting diameter (mm) (35-115 mm default)	
Materials	
Options	

PLEASE USE THE CONTACT INFORMATION ON THE BOTTOM OF THE PAGE WHEN SENDING!

Aerial Oy

Box 22
04401 Järvenpää
Finland

Tel. +358 9 2790 120
Fax +358 9 2910 210

http://www.aerial.fi
aerial@aerial.fi

ANTENNITUOTEKYSELYLOMAKE

Mikäli vastaanottamissanne esitteissä ei ollut teidän sovellukseenne sopivaa tuotetta, täyttäkää tämä lomake. Vastaanotettuamme kyselynne otamme teihin yhteyttä.

1.YHTEYSTIEDOT	
Nimi	
Yritys	
Puhelin	
Faksi	
Sähköposti	

2. Yleinen kuvaus ongelmasta/tuotteesta ja muita huomioita:

3. Tuotespesifikaatiot:	**Täyttäkää soveltuvin osin:**
Taajuus/Taajuudet(Hz)	
Kaistanleveys (Hz)	
Impedanssi (Ω)	
DC oikosulku (Kyllä/Ei)	
VSWR/Paluu vaimennus (-/dB)	
Polarisaatio	
Single pol.:Polarisaatio erottelu (dB) Multi pol.:Polarisaatiovaimennus (dB) Hybridit, tehonjakajat,... yms: Porttien välinen isolaatio (dB)	
Sisäänmeno- ja ulostuloporttien lukumäärä	
Vahvistus (dBi)	
E-taso, 3 dB keilanleveys/10 dB keilanleveys (°)	
H-taso, 3 dB keilanleveys /10 dB keilanleveys (°)	
Etu-taka-suhde (dB)	
Maksimi tehonkesto (jatkuva/pulssi) (W)	
RF-liitin/liittimet	
Tehollinen tuulipinta-ala (m^2)	
Maksimi tuulennopeus, käytössä (m/s)	
Maksimi tuulennopeus, rakenteellinen (m/s)	
Maksimi mitat (H x W x D) tai (∅ x H)	
Paino (kg)	
Asennusputken mitat (mm) (35-115 mm oletus)	
Materiaalit	
Lisävarusteet/Optiot	

PALAUTTAESSANNE LOMAKETTA KÄYTTÄKÄÄ SIVUN ALAOSAN YHTEYSTIETOJA!

Aerial Oy

Box 22
04401 Järvenpää
Finland

Tel. +358 9 2790 120
Fax +358 9 2910 210

http://www.aerial.fi
aerial@aerial.fi

MAST PRODUCT INQUIRY FORM

If among the products you have received infomation on are no mast products that suit your application, please fill in the following inquiry form and let our R&D department find the best solutions for your needs.

1.Contact information	
Name	
Company/Country	
Telephone	
Fax	
E-mail	

2. General description of the site/mast:	
Location (coordinates or other location information)	

3. Product specifications:	**Please fill in only if applicable (Aerial Oy will specify when left blank):**
Mast height from ground (m)	
Ground height from sea level (m)	
Areatype (Inland, coast,other (*))	
Design wind speed (m/s)	
Maximum wind speed (m/s)	
Icelayer thickness (mm) (if icing conditions)	
Maximum tilt (±°)	
Maximum twist (±°)	
Thge basic structure of the mast (guyed tai self supporting)	
Mast cross section (square, triangle, tube, other (*))	
Mast type (M400, M440, M500, M700, (**))	
Ladder (no ladder, inside mast or outside mast)	
Cables (no cables, inside mast or outside mast/quantity)	
Safety equipment (no safety equipment, safety ladder with safety rail or safety rail, other (*))	
Obstruction lightning (amount and height)	
Surface treatment (hot dip galvanising, painting, obstruction painting)	
Foundation type (no information, concrete foundation or rock foundation)	

***)Please specify.**
****)Please see Aerial Oy mast cataloque for reference. If optimisation is needed please leave blank.**

Aerial Oy
Box 22
04401 Järvenpää
Finland
Tel. +358 9 2790 120
Fax +358 9 2910 210
http://www.aerial.fi
aerial@aerial.fi

4.Antenna loading Amount	Size/ Area	Height	Direction	Cabling	Reserve
(pcs)	(m^2)	(m)	(°)	(pcs, diameter (mm)	(pcs)

Please note: If loading otherwise not known please state maximum top load in m^2.

5. Additional information

PLEASE USE THE CONTACT INFORMATION ON THE BOTTOM OF THE PAGE WHEN SENDING!

Aerial Oy

Box 22
04401 Järvenpää
Finland

Tel. +358 9 2790 120
Fax +358 9 2910 210

http://www.aerial.fi
aerial@aerial.fi

MASTOTUOTEKYSELYLOMAKE

Mikäli vastaanottamissanne esitteissä ei ollut teidän sovellukseenne sopivaa tuotetta, täyttäkää tämä lomake. Vastaanotettuamme kyselynne otamme teihin yhteyttä.

1.YHTEYSTIEDOT	
Nimi	
Yritys	
Puhelin	
Faksi	
Sähköposti	

2. Yleinen kuvaus kohteesta/mastosta:	
Sijainti (koordinaatit tai muu paikkatieto)	

3. Tuotespesifikaatiot:	**Täyttäkää soveltuvin osin:**
Maston korkeus maanpinnasta (m)	
Maanpinnan korkeus merenpinnasta (m)	
Aluetyyppi (sisämaa, rannikko)	
Suunnittelutuulennopeus (m/s)	
Maksimi tuulennopeus (m/s)	
Jääkerroksen paksuus (mm) (Lappi)	
Maksimi taipuma (±°)	
Maksimi kiertymä (±°)	
Maston perusrakenne (harustettu tai vapaastiseisova)	
Maston poikkileikkaus (neliö, kolmio, putki, muu (mikä?))	
Mastotyyppi (M400, M440, M500, M700...)	
Tikkaat (ei tikasta, maston sisä- tai ulkopuolella)	
Kaapelit (ei kaapeleita, maston sisä tai ulkopuolella/määrä)	
Turvalaitteet (ei turvalaitteita, turvatikas, muu (mikä?))	
Lentoestevalaistus (määrä ja korkeudet)	
Pintakäsittely (sinkki, maalaus, lentoestemaalaus)	
Perustustyyppi (ei tietoa, maaperustus tai kallioperustus)	

Aerial Oy
Box 22
04401 Järvenpää
Finland
Tel. +358 9 2790 120
Fax +358 9 2910 210
http://www.aerial.fi
aerial@aerial.fi

4.Antennikuorma Määrä (kpl)	Koko/ Pinta-ala (m^2)	Korkeus (m)	Suunta (°)	Kaapelointi (kpl, halkaisija (mm)	Tilavaraukset (kpl)

Huom! Vaihtoehtoisesti voidaan ilmoittaa maksimi huippukuorma!

5. Muita lisätietoja

PALAUTTAESSANNE LOMAKETTA KÄYTTÄKÄÄ SIVUN ALAOSAN YHTEYSTIETOJA!

Aerial Oy

Box 22
04401 Järvenpää
Finland

Tel. +358 9 2790 120
Fax +358 9 2910 210

http://www.aerial.fi
aerial@aerial.fi

ORDER FORM

Aerial Oy

Pietolankatu 9 A
04400 Järvenpää
FINLAND

Orderer:

Tel:
Fax:

Date:
Payment term:
Delivery method:
Reference:
Seller:
Mark:
Order number:
Delivery term:
Delivery time:

Invoicing address:

Tel:
Fax:

Delivery address:

Tel:
Fax:

Pos	Code	Article description	Qty	Unit	á-price	Discount%	Sum
1							
2							
3							
4							
5							
6							
7							
8							
9							
10							

Notes:

Aerial Oy
Box 22
04401 Järvenpää
FINLAND

Tel. +358 9 2790 120
Fax.+358 9 2910 210
www.aerial.fi
aerial@aerial.fi

Sampo 800010-927963 Swift: PSPBIHH
USD - Acc. Nordea 106452-214 Swift MRITFIHF
VAT: FI01263910
Y-0126391-0

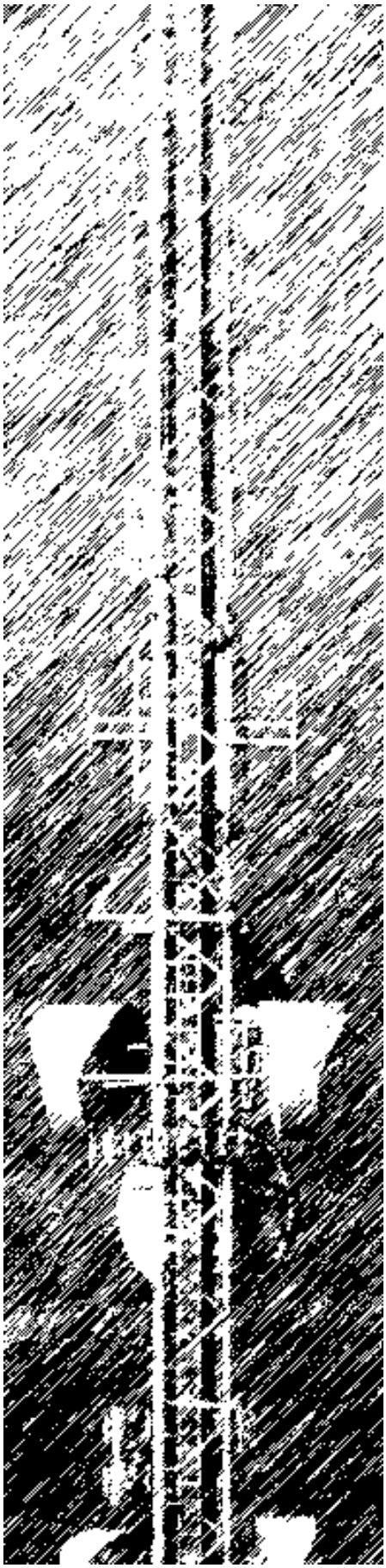

Antennas

Masts

Components

Design

Measurement

Testing

Installation

Aerial Oy

Box 22
04401 Järvenpää
Finland

Tel. +358 9 2790 120
Fax +358 9 2910 210

http://www.aerial.fi
aerial@aerial.fi

HF ANTENNA HFD2-30

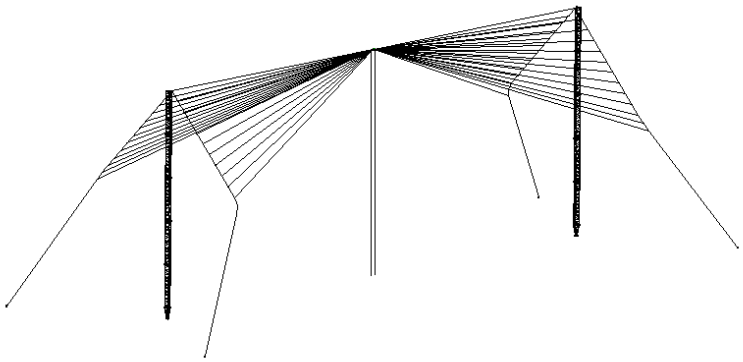

HFD2-30 GENERAL OVERVIEW, WHEN MOUNTED TO TWO 500/30-30 MASTS.

Type	HFD2-30
Frequency	2-30 MHz
Bandwidth	28 MHz
Impedance	50 Ω
VSWR	2,5 max (depending on ground properties)
Polarisation	Horisontal
Gain	6...8 dBi,(depending on ground properties).
Max. Continuous power	10 kW with EIA1 5/8”
RF-connector	EIA1 5/8”
Operational windspeed	40 m/s (default)
Survival windspeed	40 m/s (default)
Dimensions	H=29 m or as requested Distance betweeen masts 85...120 m. Catenary wire distance from mast can be as requested (default values 120 degrees from top wire to both directions R=29 m).
Weight	450 kg (antenna) 2x1470 kg (2 x M500/30-30 masts)
Materials	Hot dip galvanized steelwires Aluminium
Options	Connector type. Other frequency ranges on request. Masts/other supporting structures.

Aerial Oy
Box 22
04401 Järvenpää
Finland
Tel. +358 9 2790 120
Fax +358 9 2910 210
http://www.aerial.fi
aerial@aerial.fi

HF ANTENNA HFD3-30

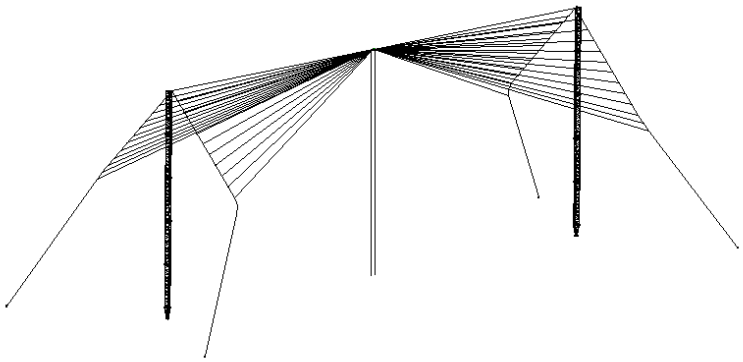

HFD3-30 GENERAL OVERVIEW, WHEN MOUNTED TO TWO 500/30-20 MASTS.

Type	HFD3-30
Frequency	3-30 MHz
Bandwidth	28 MHz
Impedance	50 Ω
VSWR	Typical 2,0 and 3,0 max
Polarisation	Horisontal
Gain	3...5 dBi, depending on ground properties.
Max. Continuous power	0,5 kW, 1 kW or as requested
RF-connector	N-female, 7/16-female or EIA flange
Operational windspeed	40 m/s (default)
Survival windspeed	55 m/s (default)
Dimensions	H=20 m or as requested Distance betweeen masts 50 m. Catenary wire distance from mast can be as requested (default values 120 degrees from top wire to both directions R=15 m).
Weight	190 kg (antenna) 2x980 kg (2 x M500/30-20 masts)
Materials	Hot dip galvanized steelwires Aluminium
Options	Other frequency ranges on request Masts/other supporting structures

Aerial Oy
Box 22
04401 Järvenpää
Finland
Tel. +358 9 2790 120
Fax +358 9 2910 210
http://www.aerial.fi
aerial@aerial.fi

TACTICAL WIDEBAND HF-DIPOLE ANTENNA HFDL2-30

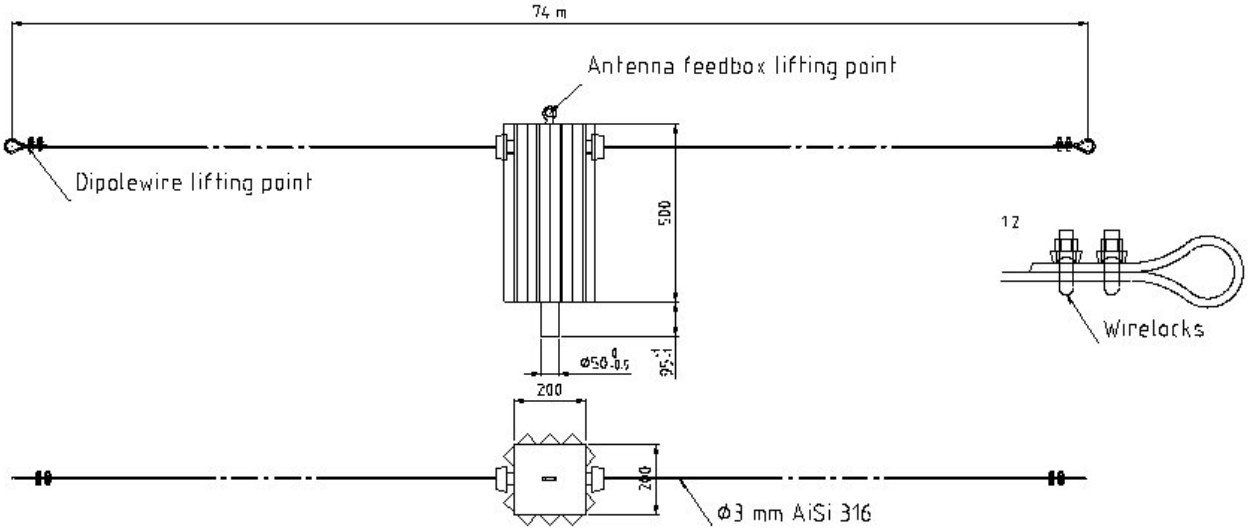

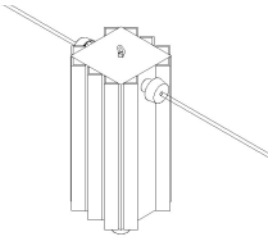

HFDL2-30 is a tactical field antenna for 2...30 MHz frequency range. The antenna consists of feeb box, dipole wires and a set of throwing ropes and weights. The feed box includes a transformer and artificial loads.

Type	HFDL2-30
Frequency	2…30 MHz
Bandwidth	28 MHz
Impedance	50 Ω DC grounded
VSWR	3,0 max with 5...60% efficiency, over medium ground.
Polarisation	Horisontal
Gain	-5...5 dBi with 5...60% efficiency taken into account, over medium ground.
E-plane 3 dB beamwidth	Depending on frequency and ground properties.
H-plane 3 dB beamwidth	Depending on frequency and ground properties
Electrical downtilt	-
Front to back ratio	-
Max. Continuous power	0,4 kW
RF-connector	N-female panel
Operational windspeed	40 m/s (default)
Survival windspeed	55 m/s (default)
Wind area	0,33 m²
Dimensions (H x W x D) (∅ x H)	500 x 74 000 x 200 mm
Weight	6 kg
Mounting	Feed box bottom socket D=50 mm, feed box equipped with top lifting eye for hanging from trees.
Materials	Aluminium. Stainless steel wires. Glass reinforced PE insulators.
Options	Transport bag. Throwing ropes and weights.

Aerial Oy
Box 22
04401 Järvenpää
Finland
Tel. +358 9 2790 120
Fax +358 9 2910 210
http://www.aerial.fi
aerial@aerial.fi

HF ANTENNA HFV2-30

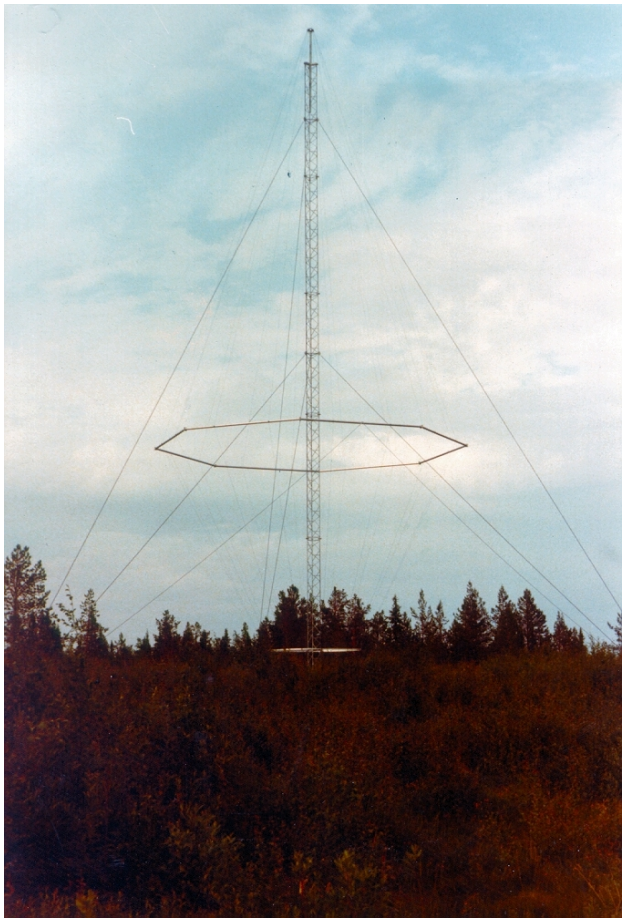

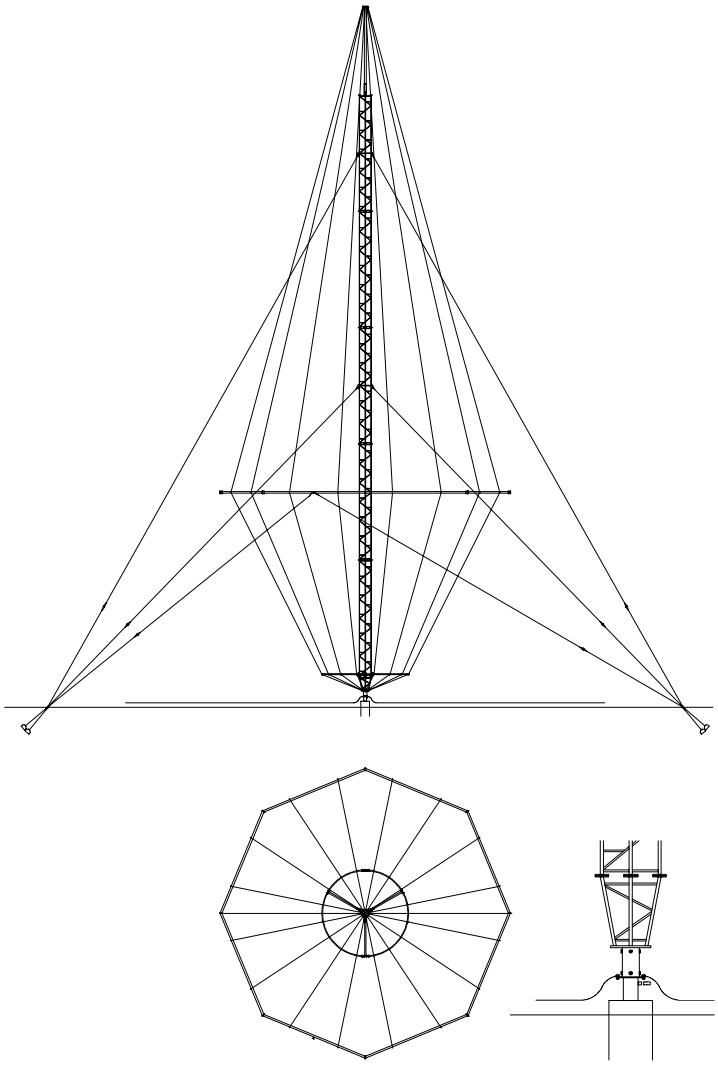

Type	HFV2-30
Frequency	2...30 MHz
Bandwidth	28 MHz
Impedance	50 Ω
VSWR	3,0 max
Polarisation	Vertical
Gain	3...5 dBi
Max. Continuous power	0,5 kW or as requested
RF-connector	N or EIA flange
Operational windspeed	40 m/s (default)
Survival windspeed	55 m/s (default)
Height	35 m
Weight	900 kg
Materials	Hot dip galvanized steel
Options	Other frequency ranges on request

Aerial Oy
Box 22
04401 Järvenpää
Finland
Tel. +358 9 2790 120
Fax +358 9 2910 210
http://www.aerial.fi
aerial@aerial.fi

HF ANTENNA HFV3-30

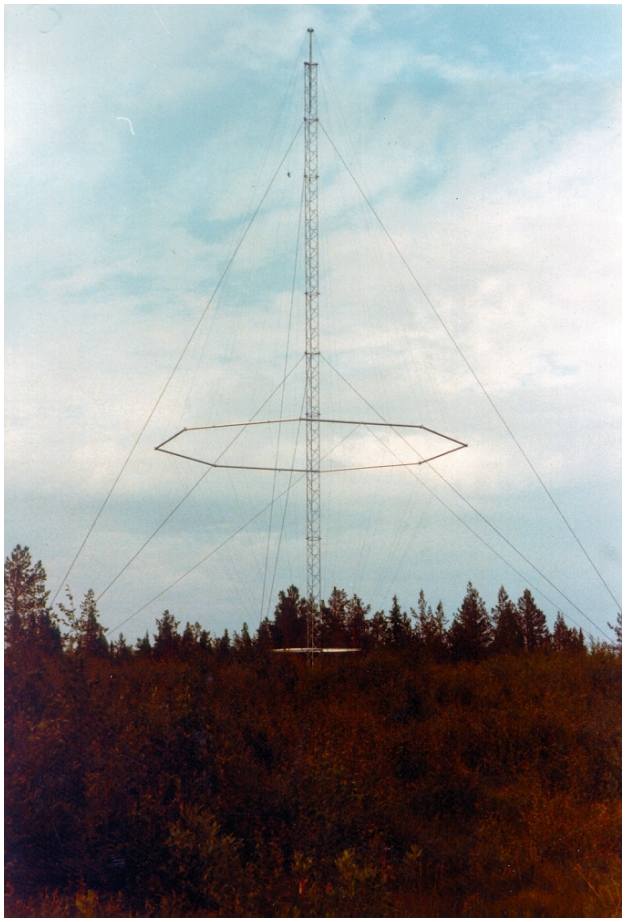

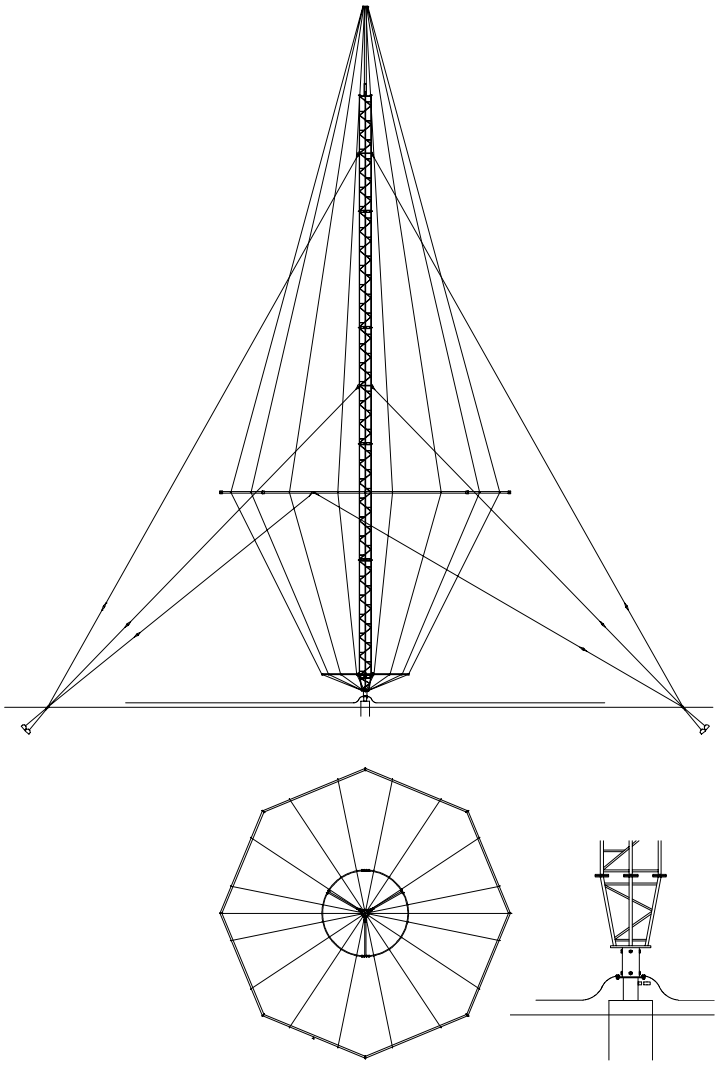

Type	HFV3-30
Frequency	3…30 MHz
Bandwidth	27 MHz
Impedance	50 Ω
VSWR	3,0 max
Polarisation	Vertical
Gain	3…5 dBi
Max. Continuous power	0,5 kW or as requested
RF-connector	N or EIA flange
Operational windspeed	40 m/s (default)
Survival windspeed	55 m/s (default)
Height	22 m
Weight	400 kg
Materials	Hot dip galvanized steel
Options	Other frequency ranges on request

Aerial Oy
Box 22
04401 Järvenpää
Finland
Tel. +358 9 2790 120
Fax +358 9 2910 210
http://www.aerial.fi
aerial@aerial.fi

HF YAGI ANTENNA HFY1462

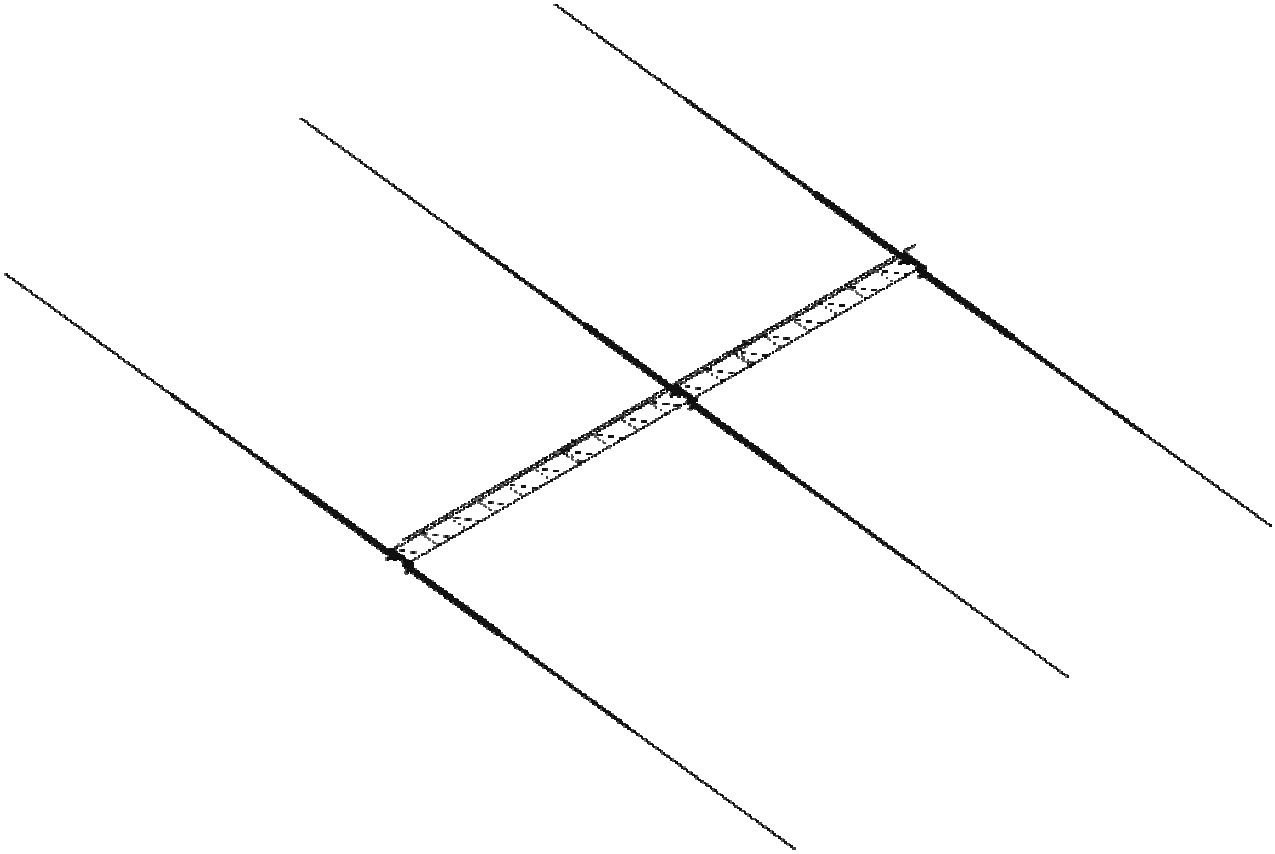

Type	HFY1462-8,75	HFY1462-13,15
Frequency	8,75 MHz	13,15 MHz
Bandwidth	2%	2%
Impedance	50 Ω DC grounded	50 Ω DC grounded
VSWR	1,3 max	1,3 max
Polarisation	Horizontal	Horizontal
Gain	8 dBi	8 dBi
E-plane 3 dB beamwidth	64º	64º
H-plane 3 dB beamwidth	100º	100º
Electrical downtilt	None	None
Front to back ratio	20 dB	20 dB
Max. Continuous power	5 kW	5 kW
RF-connector	7/8" EIA	7/8" EIA
Operational windspeed	40 m/s (default)	40 m/s (default)
Survival windspeed	55 m/s (default)	55 m/s (default)
Wind area	3,25 m²	2,15 m²
Dimensions Longest element length Boom length	 18,4 m 12,0 m	 12,3 m 8,0 m
Weight	260 kg	175 kg
Mounting	As required	As required
Materials	Aluminium Hot dip galvanized steel	Aluminium Hot dip galvanized steel
Options	-	-

Aerial Oy
Box 22
04401 Järvenpää
Finland
Tel. +358 9 2790 120
Fax +358 9 2910 210
http://www.aerial.fi
aerial@aerial.fi

HF YAGI ANTENNA HFY1463

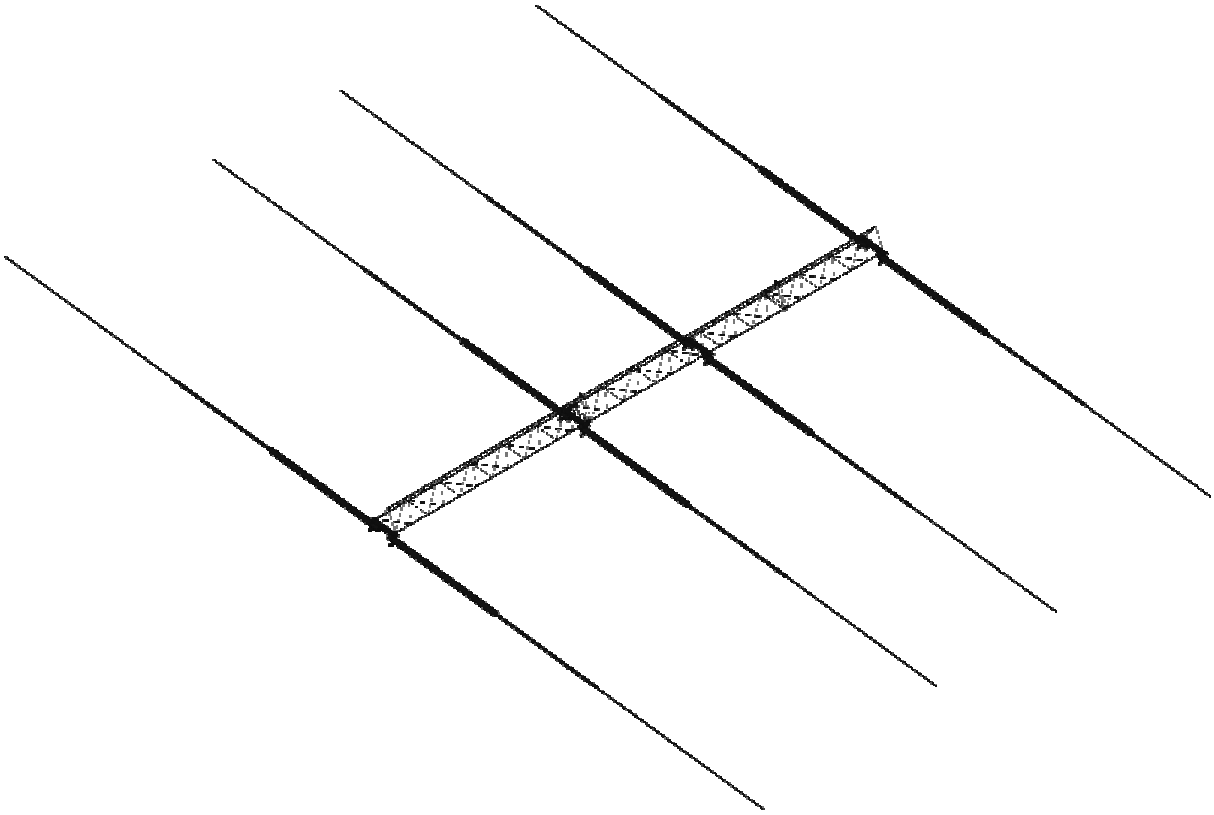

Type	HFY1463-17,3	HFY1463-22,8
Frequency	17,3 MHz	22,8 MHz
Bandwidth	2%	2%
Impedance	50 Ω DC grounded	50 Ω DC grounded
VSWR	1,3 max	1,3 max
Polarisation	Horizontal	Horizontal
Gain	9 dBi	9 dBi
E-plane 3 dB beamwidth	60º	60º
H-plane 3 dB beamwidth	90º	90º
Electrical downtilt	None	None
Front to back ratio	15 dB	15 dB
Max. Continuous power	5 kW	5 kW
RF-connector	7/8" EIA	7/8" EIA
Operational windspeed	40 m/s (default)	40 m/s (default)
Survival windspeed	55 m/s (default)	55 m/s (default)
Wind area	2,25 m²	1,70 m²
Dimensions Longest element length Boom length	 9,4 m 10,0 m	 7,1 m 6,0 m
Weight	205 kg	135 kg
Mounting	As required	As required
Materials	Aluminium Hot dip galvanized steel	Aluminium Hot dip galvanized steel
Options	-	-

Aerial Oy
Box 22
04401 Järvenpää
Finland
Tel. +358 9 2790 120
Fax +358 9 2910 210
http://www.aerial.fi
aerial@aerial.fi

LOG PERIODIC DIPOLE ARRAY LPD10-30

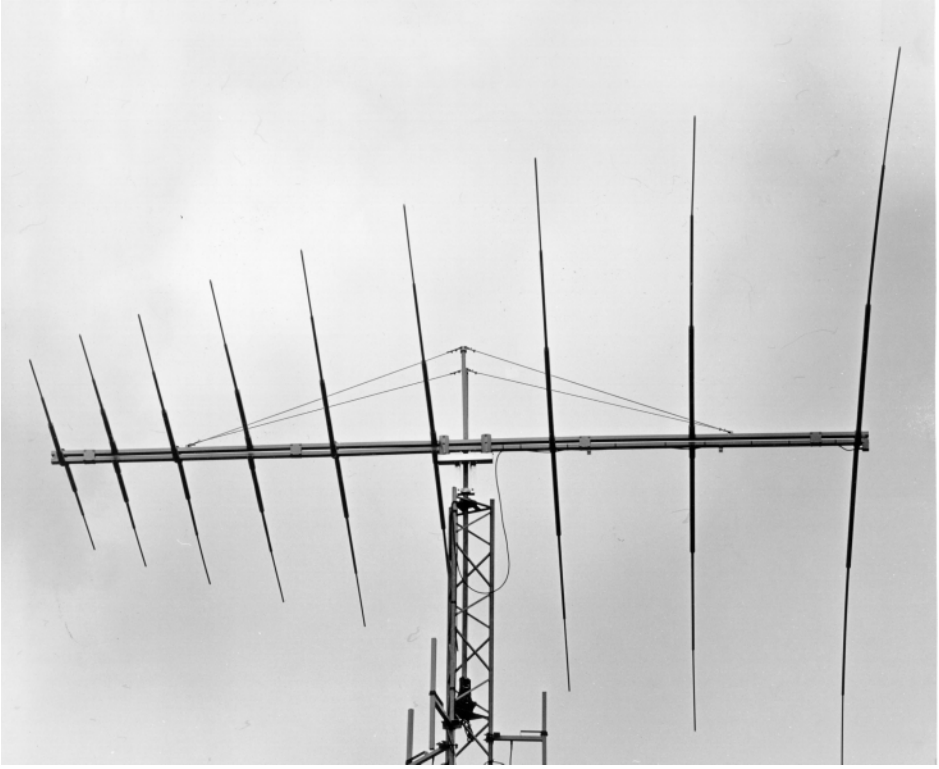

Type	LPD10-30
Frequency	10...30 MHz
Bandwidth	20 MHz
Impedance	50 Ω DC grounded
VSWR	2,0 max
Polarisation	Horisontal
Gain	5,0 dBi, free space
E-plane 3 dB beamwidth	65°
H-plane 3 dB beamwidth	110° typical
Front to back ratio	5...15 dB
Max. Continuous power	0,5 kW
RF-connector	N or 7/16 female
Operational windspeed	40 m/s (default)
Survival windspeed	55 m/s (default)
Wind area	2,5 m²
Dimensions (H x W x D)	200 x 7500 x 15000 mm
Weight	60 kg
Mounting diameter	Pipe (customer specified)
Materials	Aluminium
Options	Mounting Max. power handling

Aerial Oy

Box 22
04401 Järvenpää
Finland

Tel. +358 9 2790 120
Fax +358 9 2910 210

http://www.aerial.fi
aerial@aerial.fi

LOG PERIODIC DIPOLE ARRAY LPD4-24

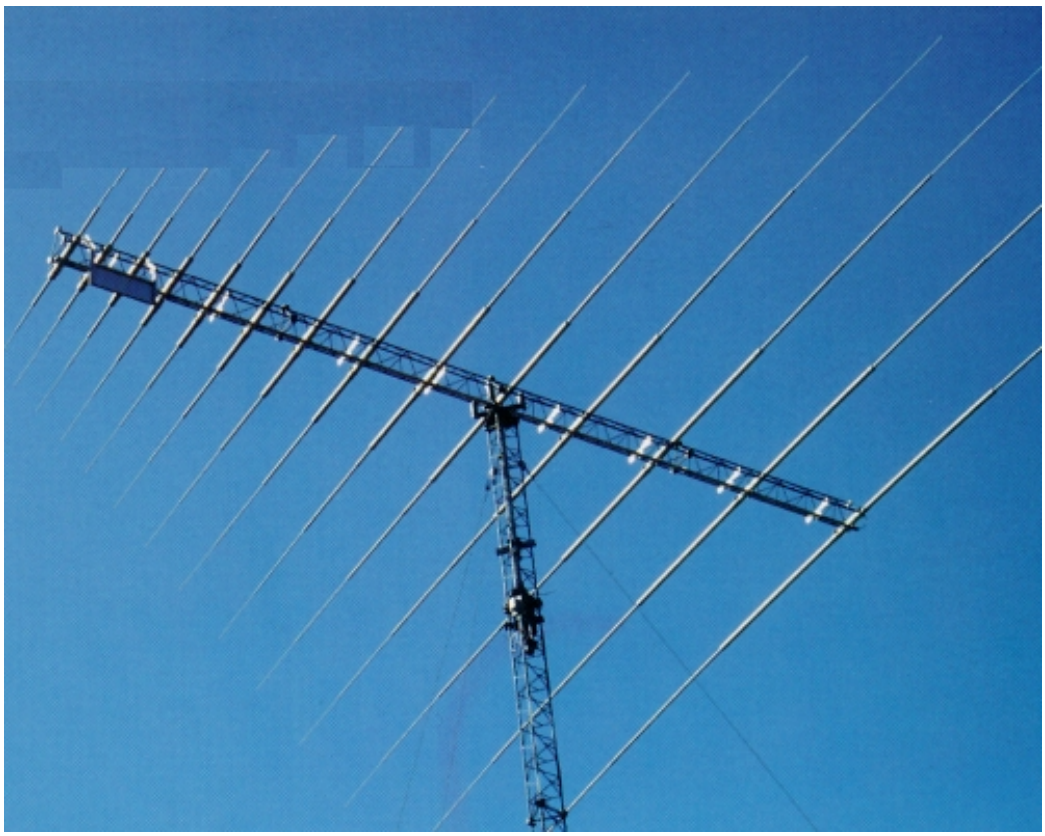

Type	LPD4-24
Frequency	4 MHz…24 MHz
Bandwidth	20 MHz
Impedance	50 Ω DC grounded
VSWR	1,5 typical, 2,5 max
Polarisation	Horisontal
Gain	8-11 dBi through frequency range over average soil conditions
E-plane 3 dB beamwidth	Nominal 65°
H-plane 3 dB beamwidth	Depending on frequency, mast height and boom tilt angle.
Electrical downtilt	None
Front to back ratio	10-18 dB through frequency range
Max. Continuous power	1 kW,5 kW or 10 kW
RF-connector	N, 7/16 female or EIA 7/8"
Operational windspeed	40 m/s (default)
Survival windspeed	55 m/s (default)
Wind area	7 m²
Dimensions (H x W x D)	500 x 30 000 x 25 000 mm
Weight	1400 kg
Mounting diameter	Customer specified
Materials	Aluminium Hot dip galvanised steel
Options	Power rating Mounting

Aerial Oy
Box 22
04401 Järvenpää
Finland
Tel. +358 9 2790 120
Fax +358 9 2910 210
http://www.aerial.fi
aerial@aerial.fi

LOG PERIODIC DIPOLE ARRAY LPD4-30

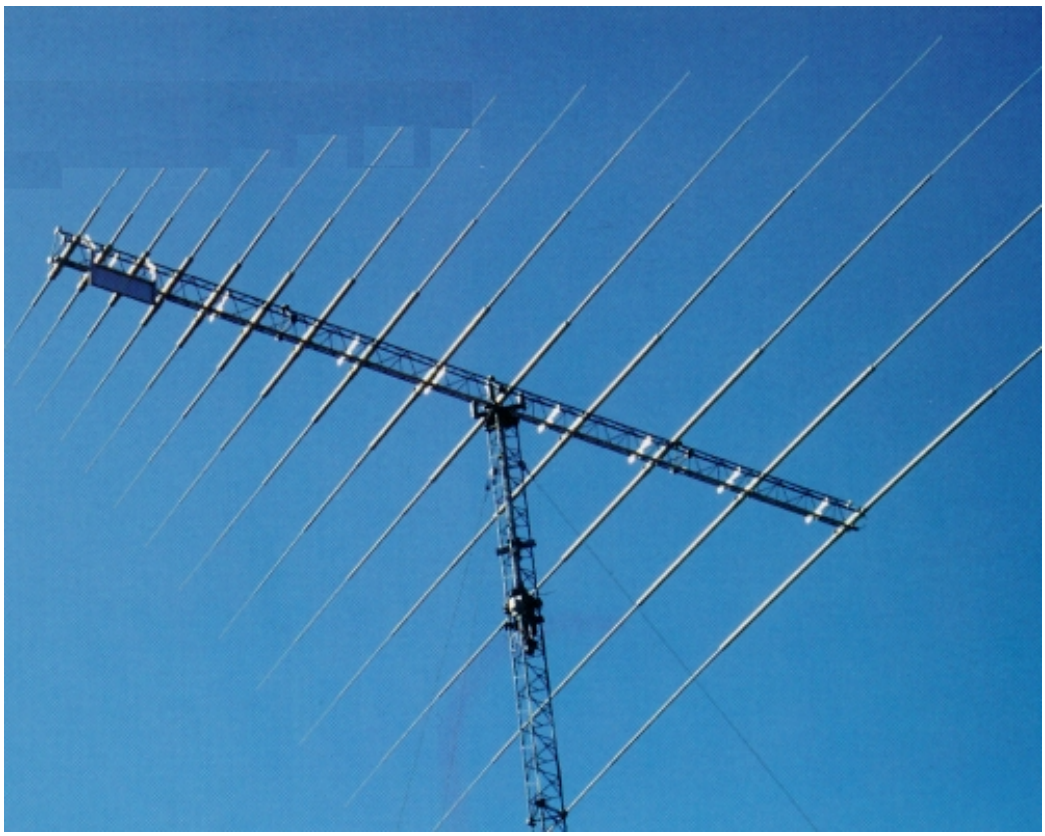

Type	LPD4-30
Frequency	4 MHz…30 MHz
Bandwidth	26 MHz
Impedance	50 Ω DC grounded
VSWR	1,5 typical, 2,5 max
Polarisation	Horisontal
Gain	8-11 dBi through frequency range over average soil conditions
E-plane 3 dB beamwidth	Nominal 65°
H-plane 3 dB beamwidth	Depending on frequency, mast height and boom tilt angle.
Electrical downtilt	None
Front to back ratio	10-18 dB through frequency range
Max. Continuous power	1 kW,5 kW or 10 kW
RF-connector	N, 7/16 female or EIA 7/8"
Operational windspeed	40 m/s (default)
Survival windspeed	55 m/s (default)
Wind area	7 m²
Dimensions (H x W x D)	500 x 30 000 x 25 000 mm
Weight	1400 kg
Mounting diameter	Customer specified
Materials	Aluminium Hot dip galvanised steel
Options	Power rating Mounting

Aerial Oy
Box 22
04401 Järvenpää
Finland
Tel. +358 9 2790 120
Fax +358 9 2910 210
http://www.aerial.fi
aerial@aerial.fi

LOG-PERIODIC DIPOLE ARRAY LPD6,5-30

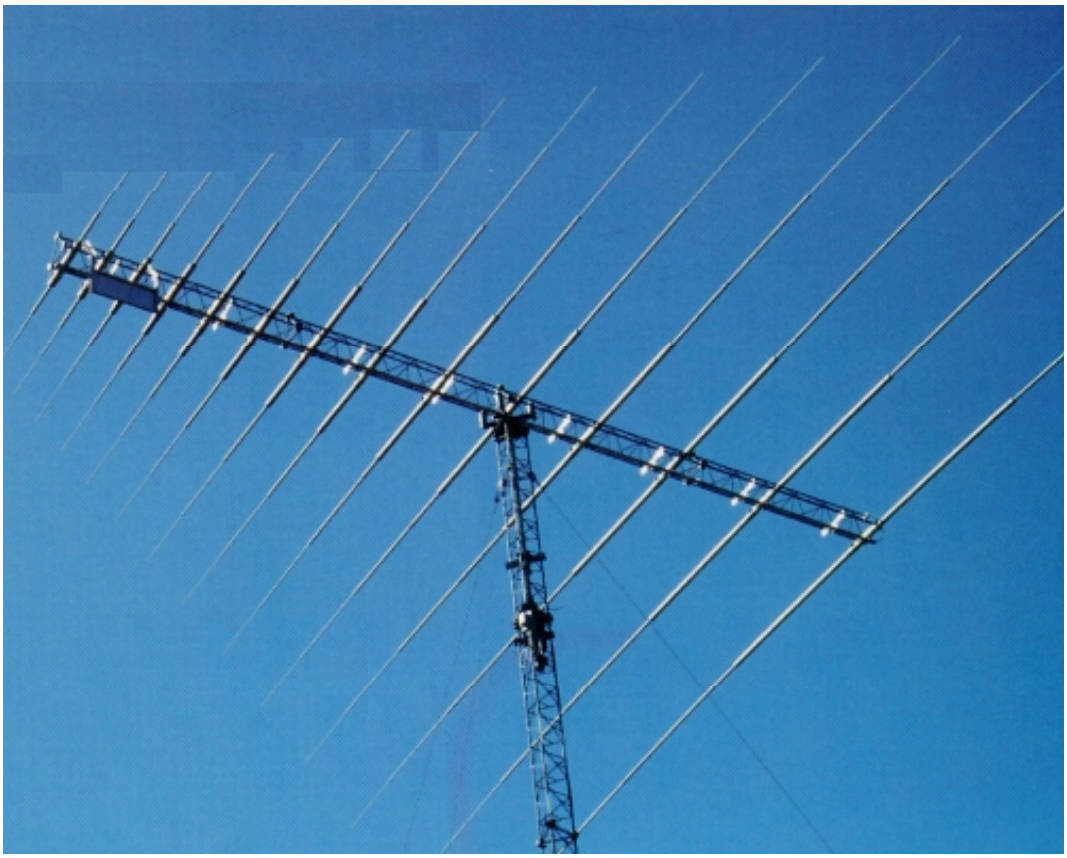

Type	LPD6,5-30
Frequency	6,5 MHz…30 MHz
Bandwidth	23,5 MHz
Impedance	50 Ω DC grounded
VSWR	1,5 typical, 2,0 max
Polarisation	Horisontal
Gain	8-11 dBi through frequency range over average soil conditions
E-plane 3 dB beamwidth	Nominal 65°
H-plane 3 dB beamwidth	Depending on frequency, mast height and boom tilt angle.
Electrical downtilt	None
Front to back ratio	10-18 dB through frequency range
Max. Continuous power	1 kW,5 kW or 10 kW
RF-connector	N, 7/16 female or EIA 7/8"
Operational windspeed	40 m/s (default)
Survival windspeed	55 m/s (default)
Wind area	7 m²
Dimensions (H x W x D)	200 x 26 500 x 16 000 mm
Weight	800 kg
Mounting diameter	Customer specified
Materials	Aluminium (EN-AW 6063 T6)
Options	Power rating Mounting

Aerial Oy
Box 22
04401 Järvenpää
Finland
Tel. +358 9 2790 120
Fax +358 9 2910 210
http://www.aerial.fi
aerial@aerial.fi

MULTIDIPOLE HF ANTENNA MDHF3-30

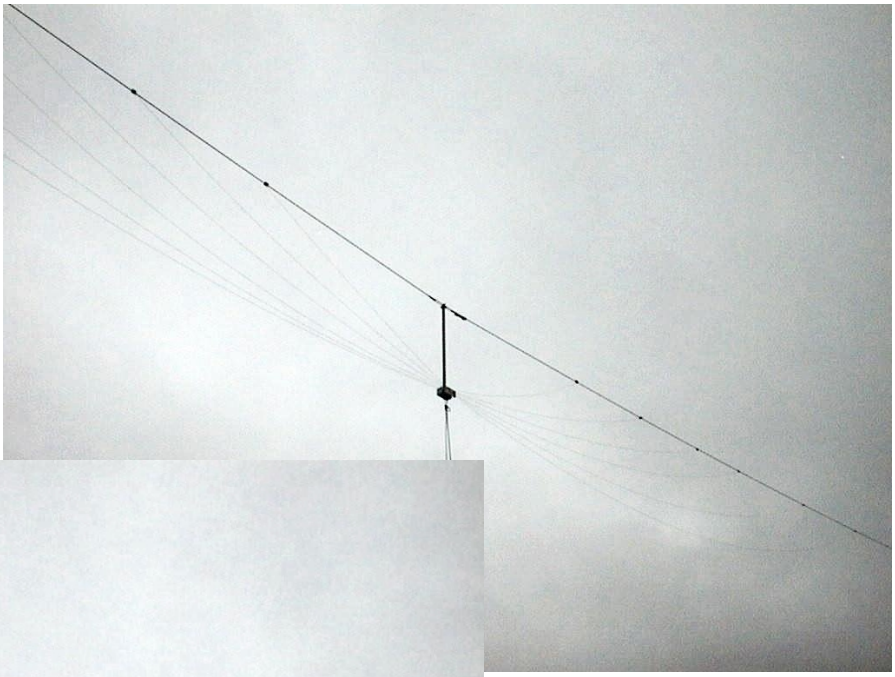

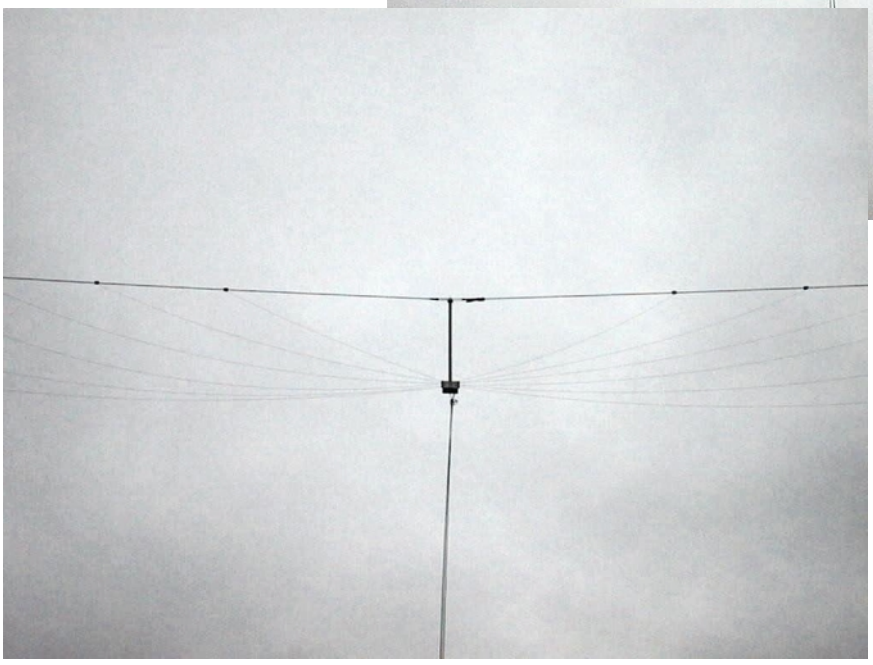

HFD3-30 GENERAL OVERVIEWS

Type	MDHF3-30
Frequency	3-30 MHz, max. 6 frequencies within this range.
Bandwidth	1% at any discrete frequency
Impedance	50 Ω
VSWR	Typical 1,5
Polarisation	Horisontal
Gain	3...5 dBi, depending on ground properties.
Max. Continuous power	1 kW max.
RF-connector	7/16-female or EIA flange
Operational windspeed	40 m/s (default)
Survival windspeed	55 m/s (default)
Dimensions	H=15 m or as requested Distance betweeen masts 44 m min. (depending on frequencies).
Weight	Antenna with balun box: 35 kg (typically, depending on amount of frequencies).
Materials	Hot dip galvanized steel wire dipoles. Parafil Supporting wires. Aluminium.
Options	Other frequency ranges on request. Diifferent power level versions. Masts/other supporting structures.

Aerial Oy
Box 22
04401 Järvenpää
Finland
Tel. +358 9 2790 120
Fax +358 9 2910 210
http://www.aerial.fi
aerial@aerial.fi

LOW GAIN BASE STATION ANTENNA AV1311

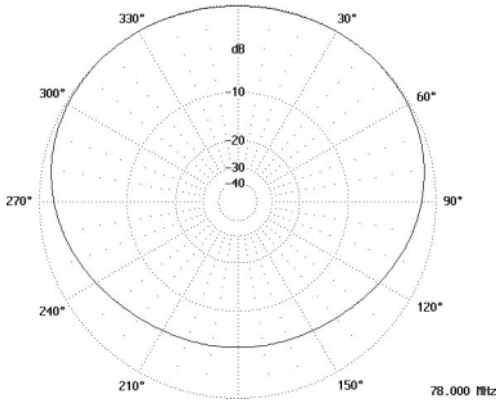

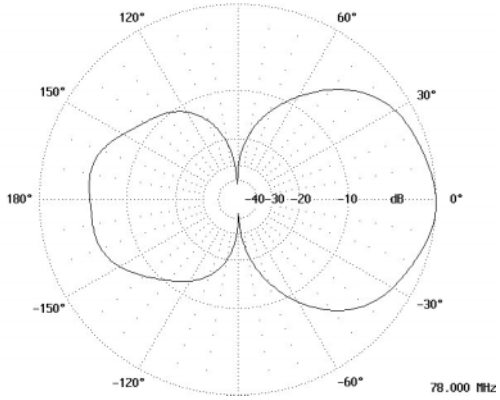

Type	AV1311
Frequency	68...88 MHz
Bandwidth	20 MHz
Impedance	50 Ω DC grounded
VSWR	1,8 max
Polarisation	Vertical
Gain	2 dBi
E-plane 3 dB beamwidth	70°
H-plane 3 dB beamwidth	200°/depending on mounting
Electrical downtilt	None
Front to back ratio	6 dB/depending on mounting
Max. Continuous power	0,5 kW
RF-connector	N or 7/16 female
Operational windspeed	40 m/s (default)
Survival windspeed	55 m/s (default)
Wind area	0,15 m²
Dimensions (H x W x D) (∅ x H)	1780 x 990 x 160 mm
Weight	6 kg
Mounting diameter	∅ 30...115 mm pipe
Materials	Aluminium Glass reinforced PE
Options	Steel version

Aerial Oy

Box 22
04401 Järvenpää
Finland

Tel. +358 9 2790 120
Fax +358 9 2910 210

http://www.aerial.fi
aerial@aerial.fi

LOW GAIN BASE STATION ANTENNA AV1312-1

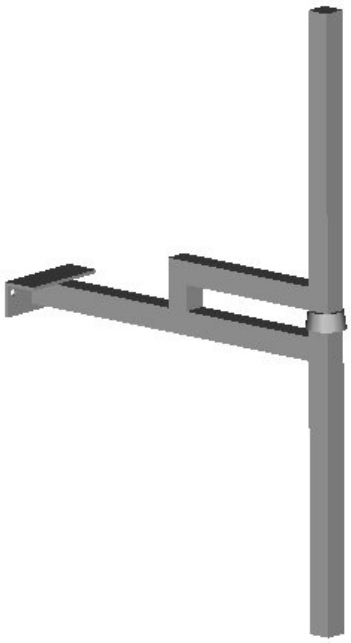

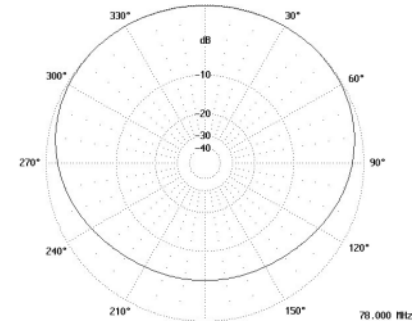

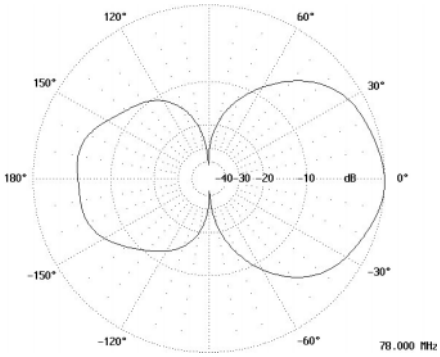

Type	AV1312-1
Frequency	118…136 MHz / 118…144 MHz
Bandwidth	18 MHz / 26 MHz
Impedance	50 Ω DC grounded
VSWR	1,5 max / 1,8 max
Polarisation	Vertical
Gain	2 dBi
E-plane 3 dB beamwidth	70°
H-plane 3 dB beamwidth	200°/depending on mounting
Electrical downtilt	None
Front to back ratio	6 dB/depending on mounting
Max. Continuous power	0,5 kW
RF-connector	N or 7/16 female
Operational windspeed	40 m/s (default)
Survival windspeed	55 m/s (default)
Wind area	0,04 m²
Dimensions (H x W x D) (∅ x H)	1060 x 160 x 646 mm
Weight	3 kg
Mounting diameter	∅ 30…115 mm pipe
Materials	Aluminium Glass reinforced PE
Options	-

Aerial Oy
Box 22
04401 Järvenpää
Finland
Tel. +358 9 2790 120
Fax +358 9 2910 210
http://www.aerial.fi
aerial@aerial.fi

LOW GAIN BASE STATION ANTENNA AV1312-2

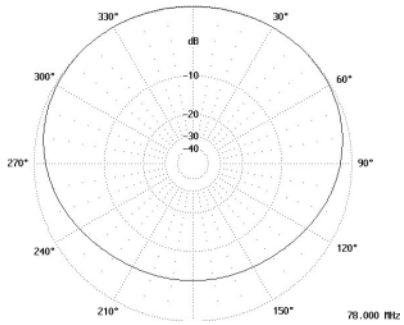

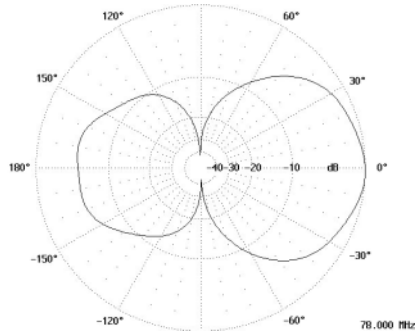

Type	AV1312-2
Frequency	146...174 MHz
Bandwidth	28 MHz
Impedance	50 Ω DC grounded
VSWR	1,5 max
Polarisation	Vertical
Gain	2 dBi
E-plane 3 dB beamwidth	70°
H-plane 3 dB beamwidth	200°/depending on mounting
Electrical downtilt	None
Front to back ratio	6 dB/depending on mounting
Max. Continuous power	0,5 kW
RF-connector	N or 7/16 female
Operational windspeed	40 m/s (default)
Survival windspeed	55 m/s (default)
Wind area	0,05 m²
Dimensions (H x W x D) (∅ x H)	824 x 520 x 160 mm
Weight	3 kg
Mounting diameter	∅ 30...115 mm pipe
Materials	Aluminium Glass reinforced PE
Options	-

Aerial Oy

Box 22
04401 Järvenpää
Finland

Tel. +358 9 2790 120
Fax +358 9 2910 210

http://www.aerial.fi
aerial@aerial.fi

LOW GAIN BASE STATION DOUBLE UNIT ANTENNA 2xAV1312-2

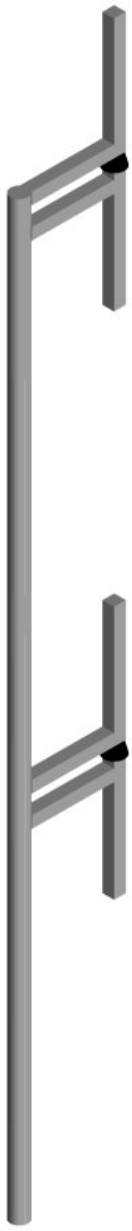

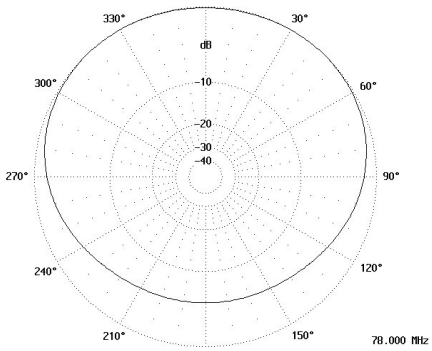

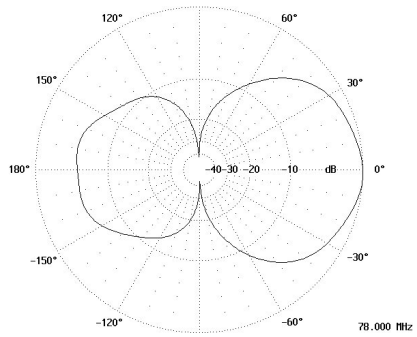

Type	2xAV1312-2
Frequency	146...174 MHz
Bandwidth	28 MHz
Impedance	50 Ω DC grounded
VSWR	1,5 typical
Polarisation	Vertical
Isolation	35 dB typical
Gain	4 dBi/unit
E-plane 3 dB beamwidth	80°
H-plane 3 dB beamwidth	200°/depending on mounting
Electrical downtilt	None
Front to back ratio	6 dB/depending on mounting
Max. Continuous power	0,5 kW
RF-connector	N or 7/16 female
Operational windspeed	40 m/s (default)
Survival windspeed	55 m/s (default)
Wind area	0,25 m²
Dimensions (H x W x D) (∅ x H)	3800 x 400 x 61 mm
Weight	7 kg
Mounting diameter	∅ 30…115 mm pipe
Materials	Aluminium Glass reinforced PE
Options	-

Aerial Oy
Box 22
04401 Järvenpää
Finland
Tel. +358 9 2790 120
Fax +358 9 2910 210
http://www.aerial.fi
aerial@aerial.fi

LOW GAIN BASE STATION TRIPLE UNIT ANTENNA 3xAV1312-2

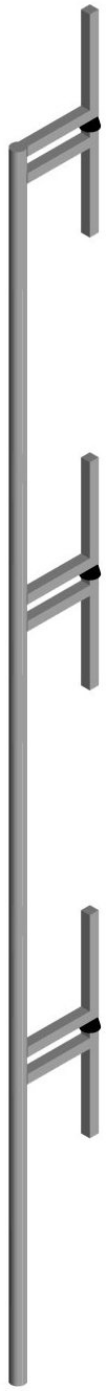

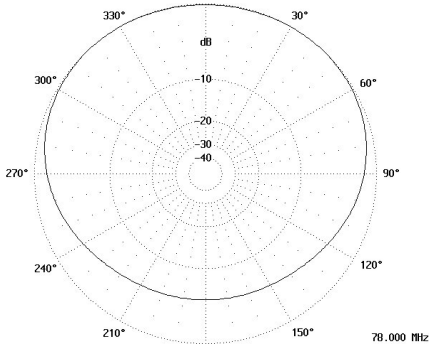

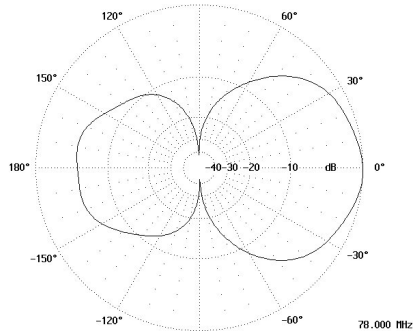

Type	3xAV1312-2
Frequency	146...174 MHz
Bandwidth	28 MHz
Impedance	50 Ω DC grounded
VSWR	1,5 typical
Polarisation	Vertical
Isolation	30 dB typical
Gain	4 dBi/unit
E-plane 3 dB beamwidth	80°
H-plane 3 dB beamwidth	200°/depending on mounting
Electrical downtilt	None
Front to back ratio	6 dB/depending on mounting
Max. Continuous power	0,5 kW
RF-connector	N or 7/16 female
Operational windspeed	40 m/s (default)
Survival windspeed	55 m/s (default)
Wind area	0,6 m²
Dimensions (H x W x D) (∅ x H)	5600 x 400 x 61 mm
Weight	18 kg
Mounting diameter	∅ 30…115 mm pipe
Materials	Aluminium Glass reinforced PE
Options	-

Aerial Oy
Box 22
04401 Järvenpää
Finland
Tel. +358 9 2790 120
Fax +358 9 2910 210
http://www.aerial.fi
aerial@aerial.fi

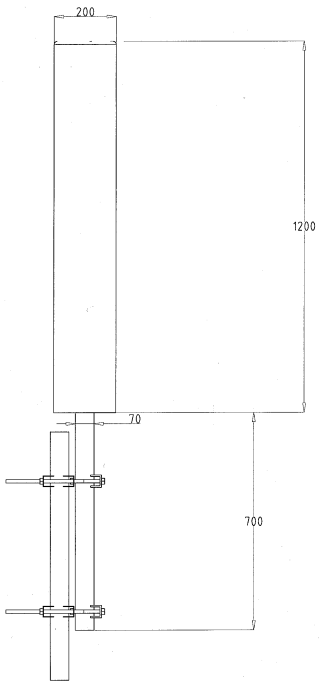

COAXIAL DIPOLE AV1419

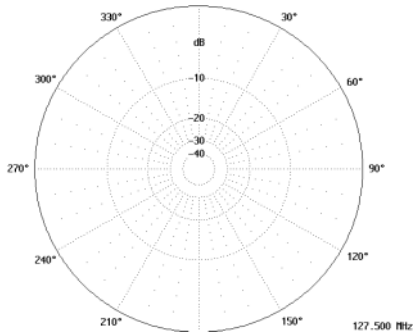

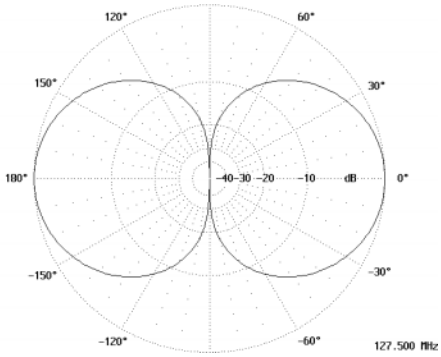

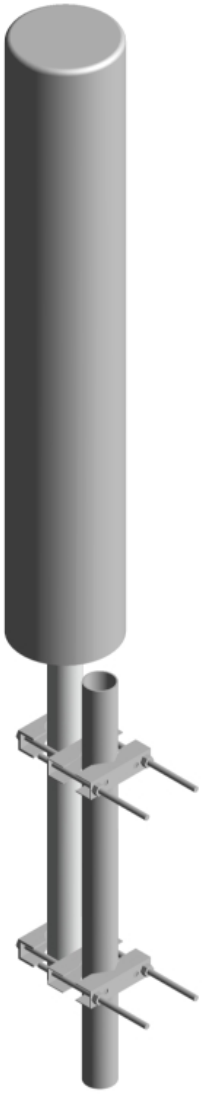

Type	AV1419
Frequency	118...137 MHz
Bandwidth	19 MHz
Impedance	50 Ω
VSWR	1,5 max
Polarisation	Vertical
Gain	0 dBi
E-plane 3 dB beamwidth	70°
H-plane 3 dB beamwidth	360°
Electrical downtilt	None
Front to back ratio	- dB
Max. Continuous power	0,5 kW
RF-connector	N or 7/16 female
Operational windspeed	40 m/s (default)
Survival windspeed	55 m/s (default)
Wind area	0,7 m²
Dimensions (H x W x D) (∅ x H)	1900 x 200 mm
Weight	15 kg
Mounting diameter	∅ 30...115 mm pipe
Materials	Aluminium Hot dip galvanised steel Glassfiber radome
Options	Heavy duty version with max. wind speed 83 m/s with 200 mm ice layer.

Aerial Oy

Box 22
04401 Järvenpää
Finland

Tel. +358 9 2790 120
Fax +358 9 2910 210

http://www.aerial.fi
aerial@aerial.fi

MEDIUM GAIN BASESTATION ANTENNA AV1430

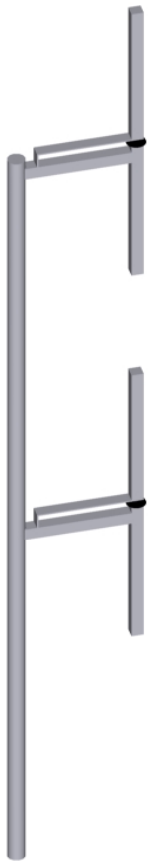

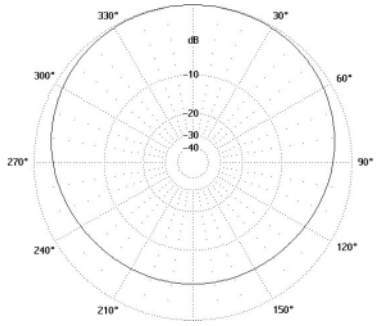

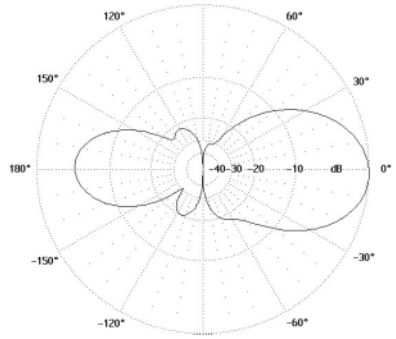

Type	AV1430
Frequency	118…136 MHz / 118…144 MHz
Bandwidth	18 MHz / 26 MHz
Impedance	50 Ω DC grounded
VSWR	1,5 max / 1,8 max
Polarisation	Vertical
Gain	7 dBi
E-plane 3 dB beamwidth	40°
H-plane 3 dB beamwidth	180°/depending on mounting
Electrical downtilt	None
Front to back ratio	6 dB/depending on mounting
Max. Continuous power	0,5 kW
RF-connector	N or 7/16 female
Operational windspeed	40 m/s (default)
Survival windspeed	55 m/s (default)
Wind area	0,3 m²
Dimensions (H x W x D) (∅ x H)	2900 x 440 x 60 mm
Weight	9 kg
Mounting diameter	∅ 30…115 mm pipe
Materials	Aluminium Glass reinforced PE
Options	-

Aerial Oy
Box 22
04401 Järvenpää
Finland
Tel. +358 9 2790 120
Fax +358 9 2910 210
http://www.aerial.fi
aerial@aerial.fi

MEDIUM GAIN BASE STATION ANTENNA AV1431

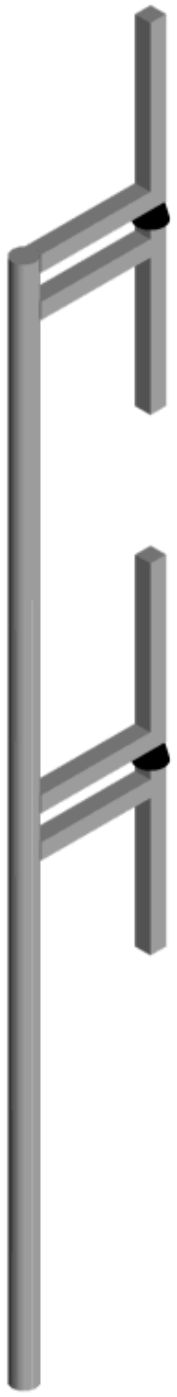

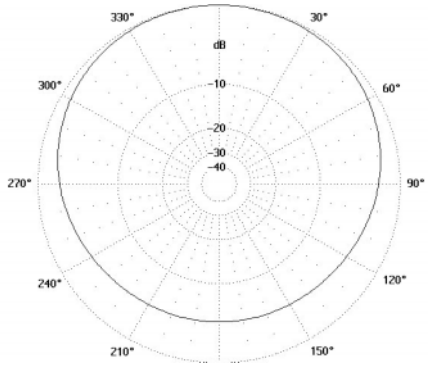

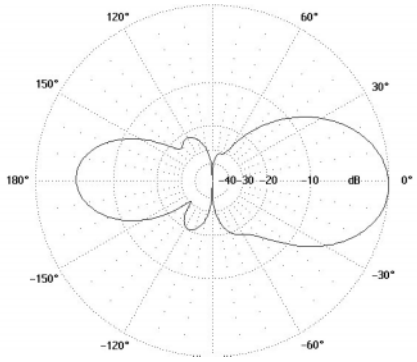

Type	AV1431
Frequency	146...174 MHz
Bandwidth	28 MHz
Impedance	50 Ω DC grounded
VSWR	1,5 max
Polarisation	Vertical
Gain	7 dBi
E-plane 3 dB beamwidth	40°
H-plane 3 dB beamwidth	180°/depending on mounting
Electrical downtilt	None
Front to back ratio	6 dB/depending on mounting
Max. Continuous power	0,5 kW
RF-connector	N or 7/16 female
Operational windspeed	40 m/s (default)
Survival windspeed	55 m/s (default)
Wind area	0,25 m²
Dimensions (H x W x D) (∅ x H)	3000 x 400 x 61 mm
Weight	7 kg
Mounting diameter	∅ 30...115 mm pipe
Materials	Aluminium Glass reinforced PE
Options	AV1431-St (Hot dip galvanised steel) AV1431-100° (100°C specification)

Aerial Oy

Box 22
04401 Järvenpää
Finland

Tel. +358 9 2790 120
Fax +358 9 2910 210

http://www.aerial.fi
aerial@aerial.fi

MEDIUM GAIN BASE STATION DOUBLE UNIT ANTENNA 2xAV1431

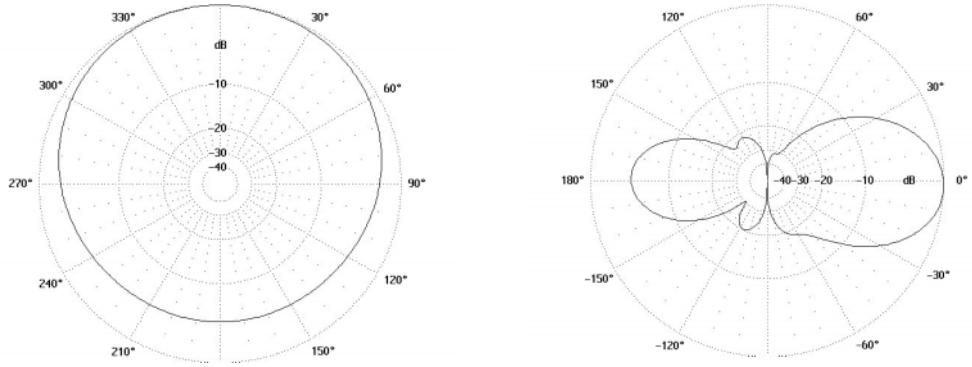

Radiation pattern/unit

Type	2xAV1431
Frequency	146…174 MHz
Bandwidth	28 MHz
Impedance	50 Ω DC grounded
VSWR	1,5 max
Polarisation	Vertical
Isolation	35..40 dB
Gain	7 dBi/unit
E-plane 3 dB beamwidth	40°
H-plane 3 dB beamwidth	180°/depending on mounting
Electrical downtilt	None
Front to back ratio	6 dB/depending on mounting
Max. Continuous power	0,5 kW
RF-connector	N or 7/16 female
Operational windspeed	40 m/s (default)
Survival windspeed	55 m/s (default)
Wind area	0,5 m²
Dimensions (H x W x D) (∅ x H)	6500 x 400 x 60 mm
Weight	22 kg
Mounting diameter	∅ 30…115 mm pipe
Materials	Aluminium Glass reinforced PE
Options	AV1431-St (Hot dip galvanised steel) AV1431-100° (100°C specification)

Aerial Oy

Box 22
04401 Järvenpää
Finland

Tel. +358 9 2790 120
Fax +358 9 2910 210

http://www.aerial.fi
aerial@aerial.fi

DOUBLE UNIT MEDIUM GAIN BASE STATION ANTENNA AV1431/AV1915

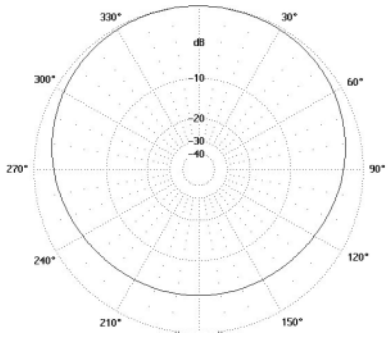

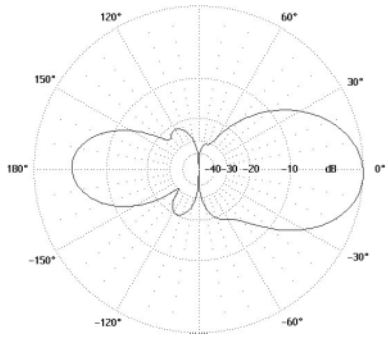

Type	AV1431/AV1915
Frequency	146…174 MHz 360…470 MHz
Bandwidth	28 MHz 90 MHz
Impedance	50 Ω DC grounded
VSWR	1,5 max
Polarisation	Vertical
Gain	7 dBi
E-plane 3 dB beamwidth	40°
H-plane 3 dB beamwidth	180°/depending on mounting
Electrical downtilt	None
Front to back ratio	6 dB/depending on mounting
Max. Continuous power	0,5 kW
RF-connector	N or 7/16 female
Operational windspeed	40 m/s (default)
Survival windspeed	55 m/s (default)
Wind area	0,42 m²
Dimensions (H x W x D) (∅ x H)	4100 x 400 x 60 mm
Weight	13 kg
Mounting diameter	∅ 30…115 mm pipe
Materials	Aluminium Glass reinforced PE
Options	-

Aerial Oy
Box 22
04401 Järvenpää
Finland
Tel. +358 9 2790 120
Fax +358 9 2910 210
http://www.aerial.fi
aerial@aerial.fi

MEDIUM GAIN BASE STATION ANTENNA AV1432

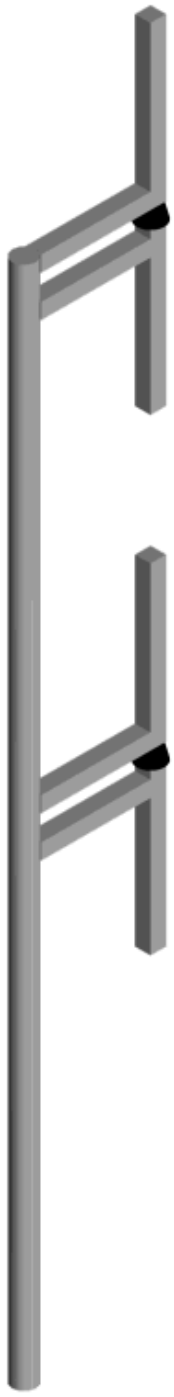

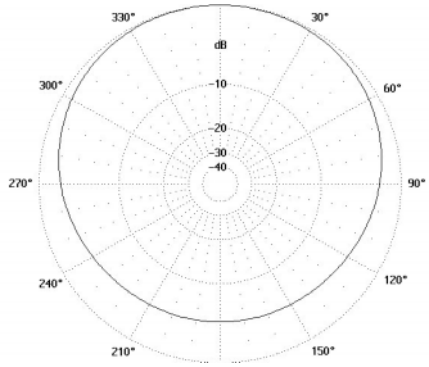

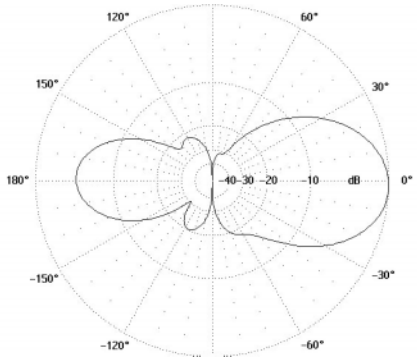

Type	AV1432
Frequency	214...234 MHz
Bandwidth	20 MHz
Impedance	50 Ω DC grounded
VSWR	1,5 max
Polarisation	Vertical
Gain	7 dBi
E-plane 3 dB beamwidth	40°
H-plane 3 dB beamwidth	180°/depending on mounting
Electrical downtilt	None
Front to back ratio	6 dB/depending on mounting
Max. Continuous power	0,5 kW
RF-connector	N or 7/16 female
Operational windspeed	40 m/s (default)
Survival windspeed	55 m/s (default)
Wind area	0,25 m²
Dimensions (H x W x D) (∅ x H)	3000 x 400 x 61 mm
Weight	7 kg
Mounting diameter	∅ 30...115 mm pipe
Materials	Aluminium Glass reinforced PE
Options	-

Aerial Oy

Box 22
04401 Järvenpää
Finland

Tel. +358 9 2790 120
Fax +358 9 2910 210

http://www.aerial.fi
aerial@aerial.fi

MEDIUM GAIN BASESTATION ANTENNA AV1440

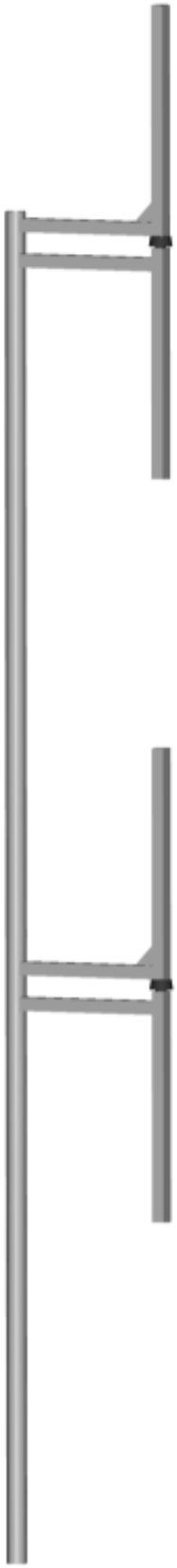

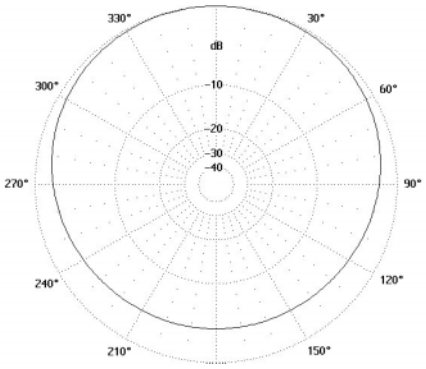

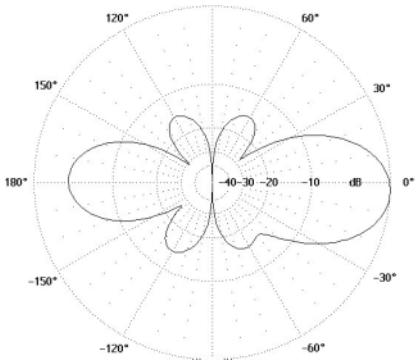

Type	AV1440
Frequency	AV1440-L : 67...75 MHz AV1440-M : 73...82 MHz AV1440-H : 79...89 MHz
Bandwidth	AV1440-L : 8 MHz AV1440-M : 9 MHz AV1440-H : 10 MHz
Impedance	50 Ω DC grounded
VSWR	1,5 max
Polarisation	Vertical
Gain	6 dBi
E-plane 3 dB beamwidth	30°
H-plane 3 dB beamwidth	180°/depending on mounting
Electrical downtilt	None
Front to back ratio	6 dB/depending on mounting
Max. Continuous power	0,5 kW
RF-connector	N or 7/16 female
Operational windspeed	40 m/s (default)
Survival windspeed	55 m/s (default)
Wind area	0,5 m²
Dimensions (H x W x D) (∅ x H)	5000 x 660 x 60 mm
Weight	18 kg
Mounting diameter	∅ 30...115 mm pipe
Materials	Aluminium Glass reinforced PE
Options	Hot dip galvanised steel version. A4-version. Custom frequency ranges.

Aerial Oy

Box 22
04401 Järvenpää
Finland

Tel. +358 9 2790 120
Fax +358 9 2910 210

http://www.aerial.fi
aerial@aerial.fi

GROUND PLANE ANTENNA AV1458

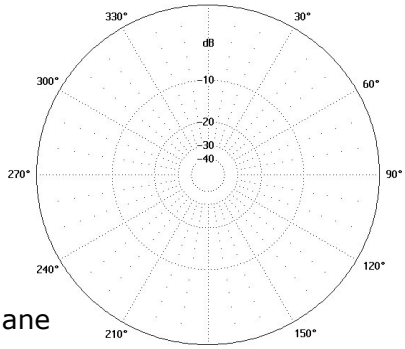

H-plane

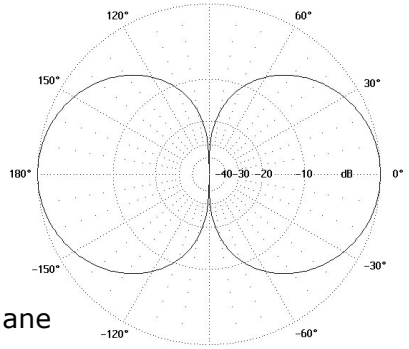

E-plane

The antenna is attached with two M10x20 bolts (material A2). The ground plane elements can be detached for easy transportation.

Type	AV1458
Frequency	AV1458 : 118…136 MHz AV1458-M: 118…136 MHz AV1458-1 : 118…144 MHz
Bandwidth	AV1458 : 18 MHz as in table AV1458-M : 18 MHz as in table AV1458-1 : 26 MHz
Impedance	50 Ω DC grounded
VSWR	1,5 max
Polarisation	Vertical
Gain	2 dBi
E-plane 3 dB beamwidth	80°
H-plane 3 dB beamwidth	360°
Electrical downtilt	None
Front to back ratio	- dB
Max. Continuous power	0,5 kW
RF-connector	N or 7/16 female
Operational windspeed	40 m/s (default)
Survival windspeed	55 m/s (default)
Wind area	0,1 m²
Dimensions (H x W x D) (∅ x H)	858 x 750 x 750 mm
Weight	2 kg
Mounting diameter	∅ 30…115 mm pipe
Materials	Aluminium Glassfiber radome Glass reinforced PE
Options	Wide band version : AV1458-1 Marine version : AV1458-M

Aerial Oy
Box 22
04401 Järvenpää
Finland
Tel. +358 9 2790 120
Fax +358 9 2910 210
http://www.aerial.fi
aerial@aerial.fi

AV1458 GROUND PLANE ELEMENT TUNING

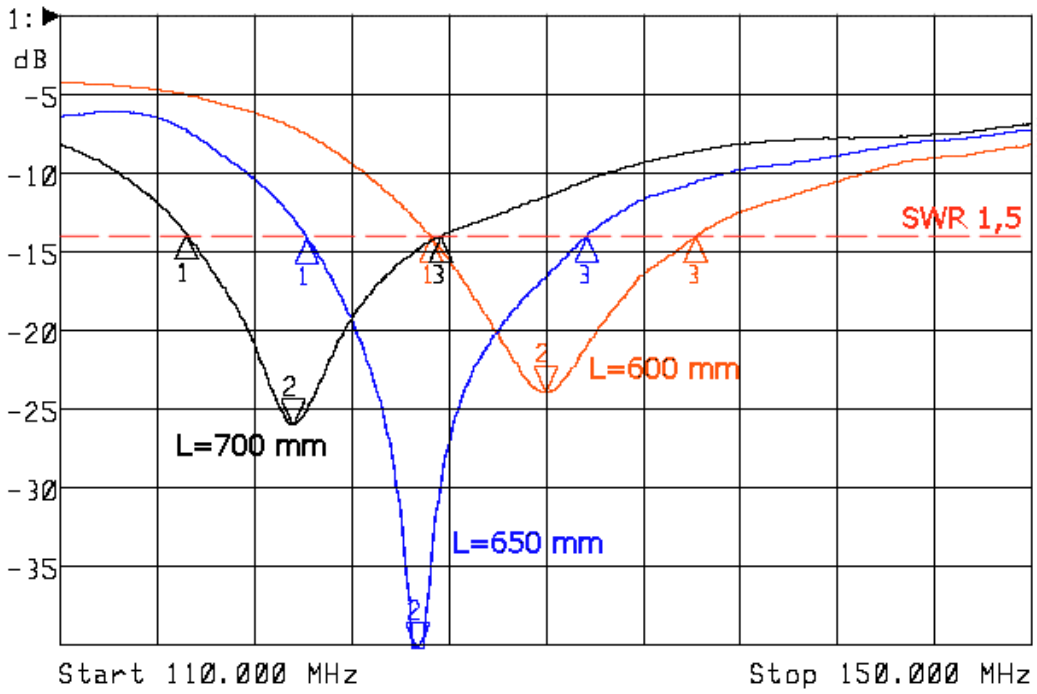

AV1458-M GROUND PLANE ELEMENT TUNING

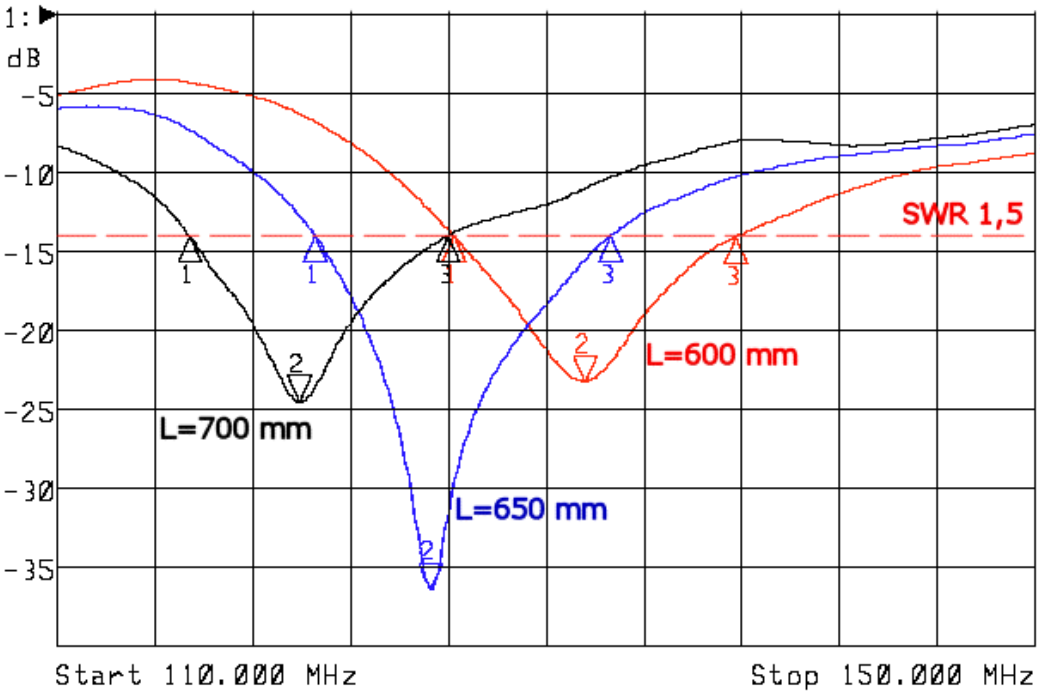

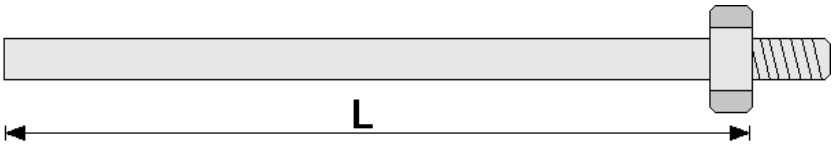

Aerial Oy
Box 22
04401 Järvenpää
Finland
Tel. +358 9 2790 120
Fax +358 9 2910 210
http://www.aerial.fi
aerial@aerial.fi

GROUND PLANE ANTENNA AV1460

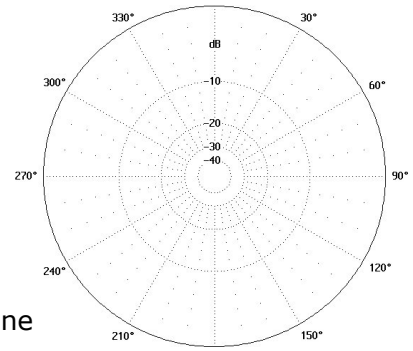

H-plane

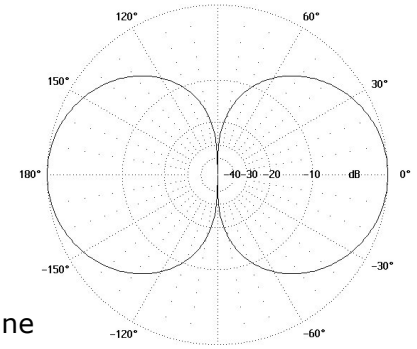

E-plane

The antenna is attached with two M10x20 bolts (material A2). The ground plane elements can be detached for easy transportation.

Type	AV1460
Frequency	68…88 MHz
Bandwidth	20 MHz as in table
Impedance	50 Ω DC grounded
VSWR	1,5 max
Polarisation	Vertical
Gain	2 dBi
E-plane 3 dB beamwidth	80°
H-plane 3 dB beamwidth	N/A
Electrical downtilt	None
Front to back ratio	N/A
Max. Continuous power	0,5 kW
RF-connector	N or 7/16 female
Operational windspeed	40 m/s (default)
Survival windspeed	55 m/s (default)
Wind area	0,1 m²
Dimensions (H x W x D) (∅ x H)	1400 x 1400 x 1400 mm
Weight	3 kg
Mounting diameter	∅ 40…60 mm pipe
Materials	Aluminium Glass reinforced PE
Options	Marine version : AV1460-M

Aerial Oy

Box 22
04401 Järvenpää
Finland

Tel. +358 9 2790 120
Fax +358 9 2910 210

http://www.aerial.fi
aerial@aerial.fi

AV1460 GROUND PLANE ELEMENT TUNING

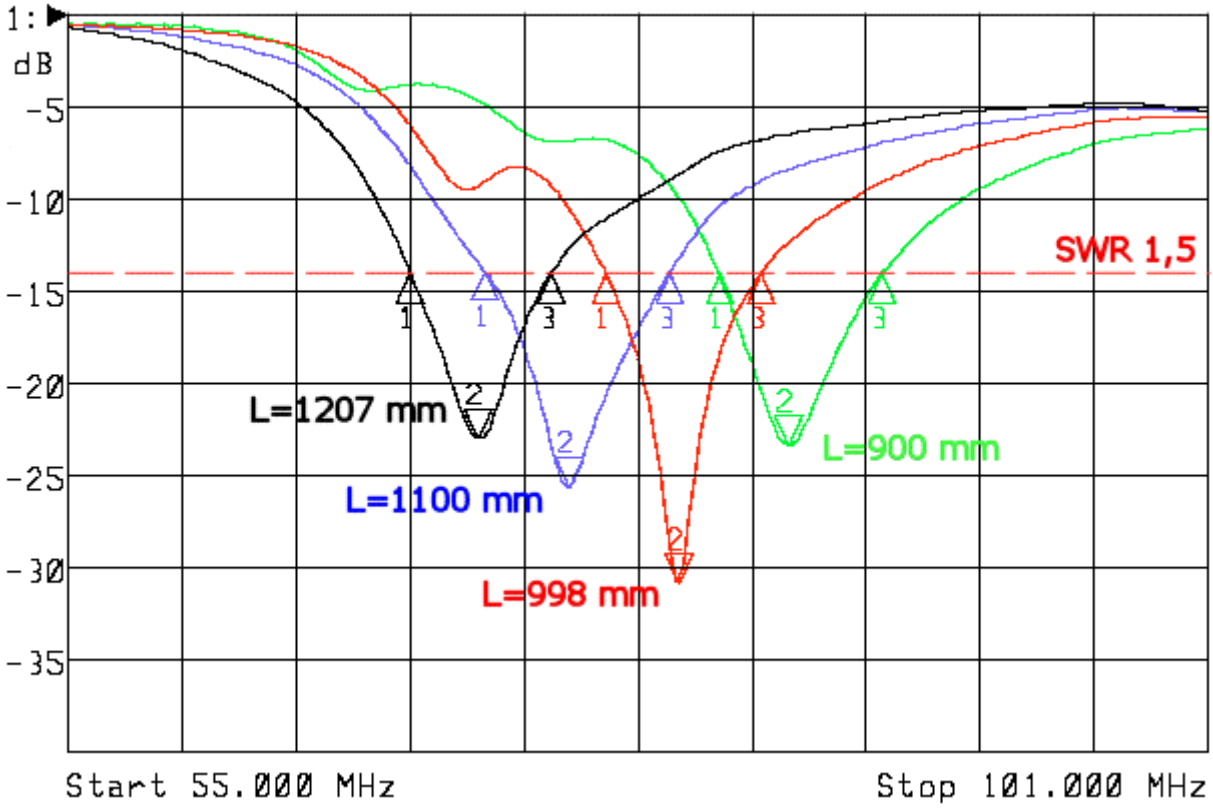

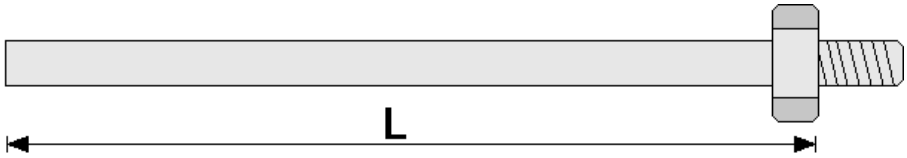

Aerial Oy
Box 22
04401 Järvenpää
Finland
Tel. +358 9 2790 120
Fax +358 9 2910 210
http://www.aerial.fi
aerial@aerial.fi

GROUND PLANE ANTENNA AV1461

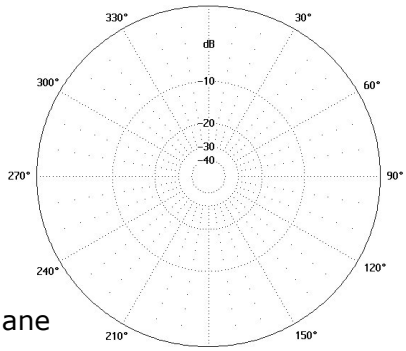

H-plane

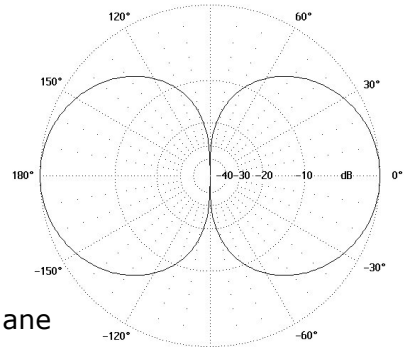

E-plane

The antenna is attached with two M10x20 bolts (material A2). The ground plane elements can be detached for easy transportation.

Type	AV1461
Frequency	146…174 MHz
Bandwidth	28 MHz (see table)
Impedance	50 Ω DC grounded
VSWR	1,5 max
Polarisation	Vertical
Gain	2 dBi
E-plane 3 dB beamwidth	80°
H-plane 3 dB beamwidth	N/A
Electrical downtilt	None
Front to back ratio	N/A
Max. Continuous power	0,5 kW
RF-connector	N or 7/16 female
Operational windspeed	40 m/s (default)
Survival windspeed	55 m/s (default)
Wind area	0,1 m²
Dimensions (H x W x D) (∅ x H)	500 x 700 x 700 mm
Weight	2 kg
Mounting diameter	∅ 40…60 mm pipe
Materials	Aluminium Glass reinforced PE
Options	Marine version : AV1461-M

Aerial Oy
Box 22
04401 Järvenpää
Finland
Tel. +358 9 2790 120
Fax +358 9 2910 210
http://www.aerial.fi
aerial@aerial.fi

AV1461 GROUND PLANE ELEMENT TUNING

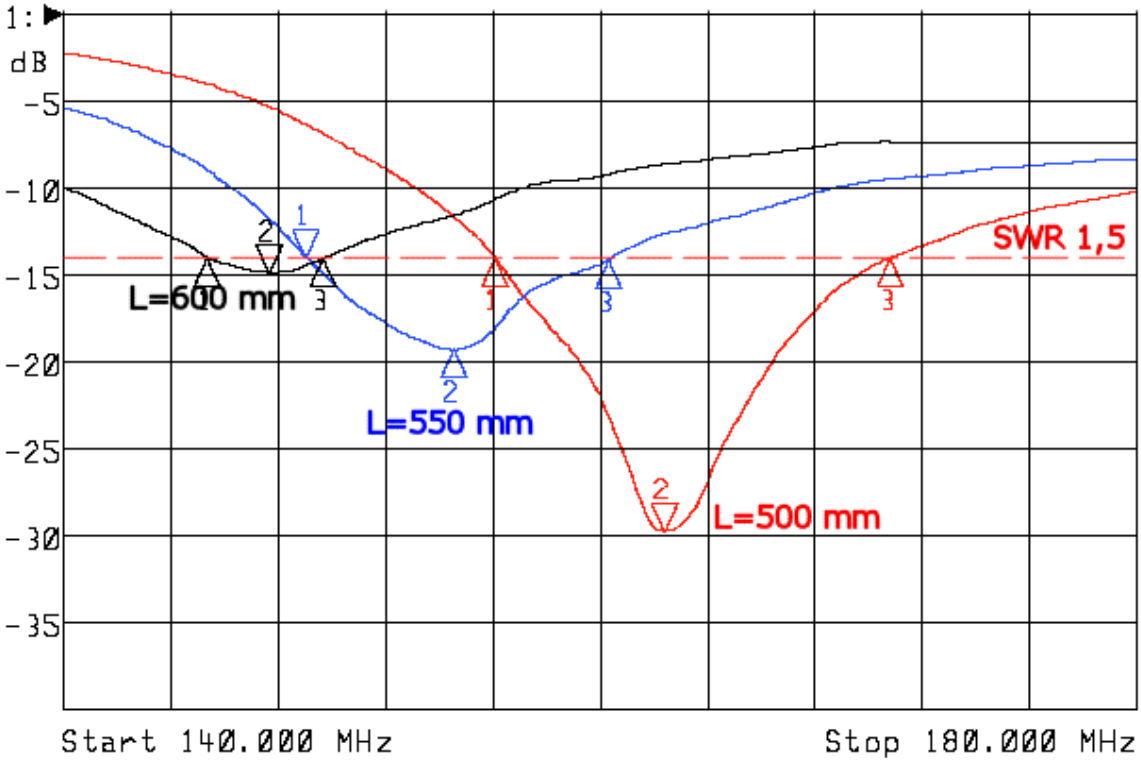

AV1461-M GROUND PLANE ELEMENT TUNING

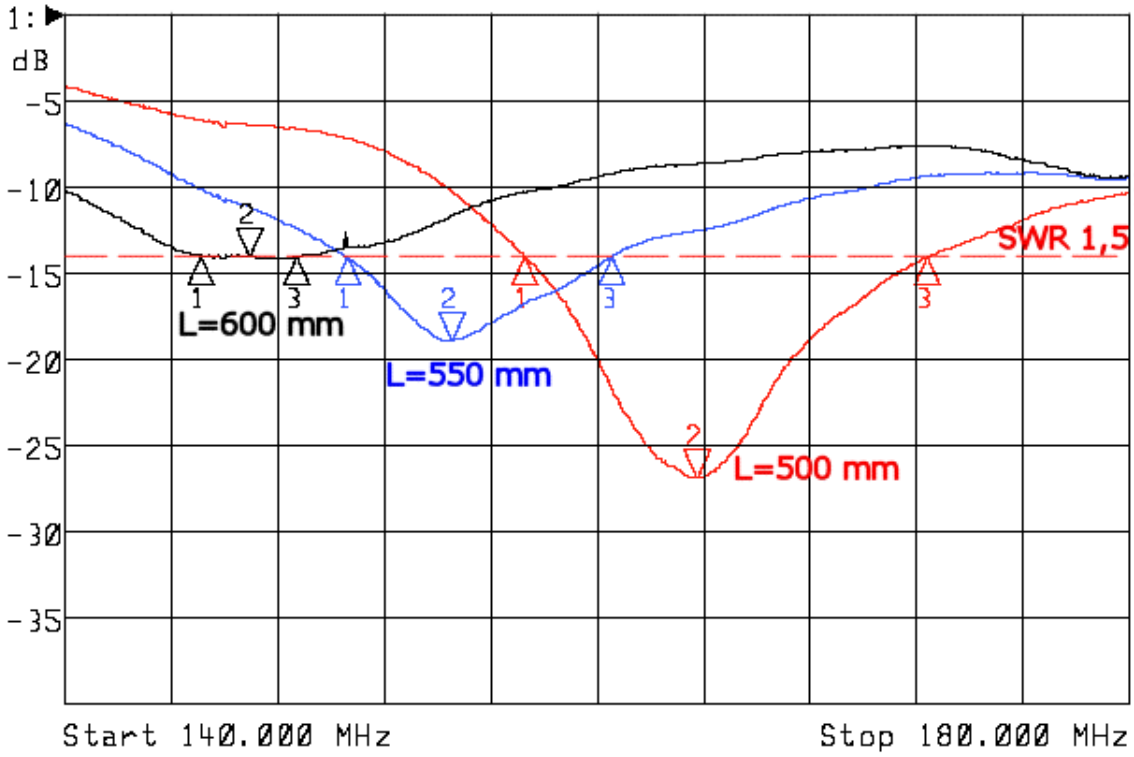

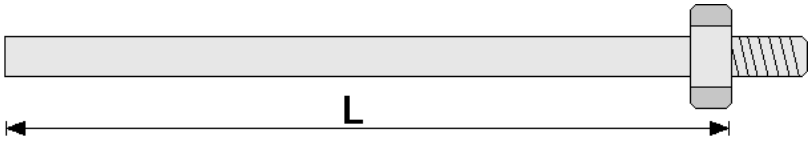

Aerial Oy
Box 22
04401 Järvenpää
Finland
Tel. +358 9 2790 120
Fax +358 9 2910 210
http://www.aerial.fi
aerial@aerial.fi

YAGI ANTENNA AV1462-78

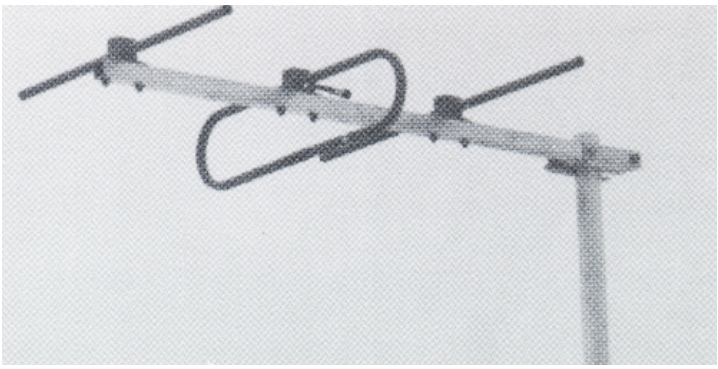

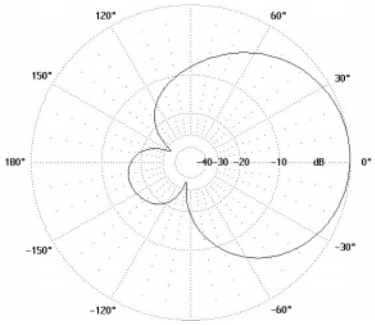

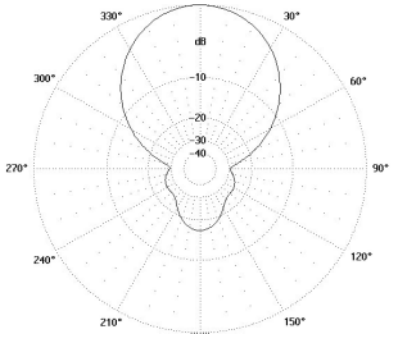

Type	AV1462-78
Frequency	68…88 MHz
Bandwidth	20 MHz in 5 MHz steps
Impedance	50 Ω DC grounded
VSWR	1,5 max
Polarisation	Horisontal or Vertical
Gain	7 dBi
E-plane 3 dB beamwidth	60°
H-plane 3 dB beamwidth	80°
Electrical downtilt	None
Front to back ratio	15 dB
Max. Continuous power	0,5 kW
RF-connector	N or 7/16 female
Operational windspeed	40 m/s (default)
Survival windspeed	55 m/s (default)
Wind area	0,4 m²
Dimensions (H x W x D) (∅ x H)	1740 x 1830 x 200 mm
Weight	7 kg
Mounting diameter	∅ 30…115 mm pipe
Materials	Aluminium Glass reinforced PE
Options	-

Aerial Oy
Box 22
04401 Järvenpää
Finland
Tel. +358 9 2790 120
Fax +358 9 2910 210
http://www.aerial.fi
aerial@aerial.fi

YAGI ANTENNA AV1462-160

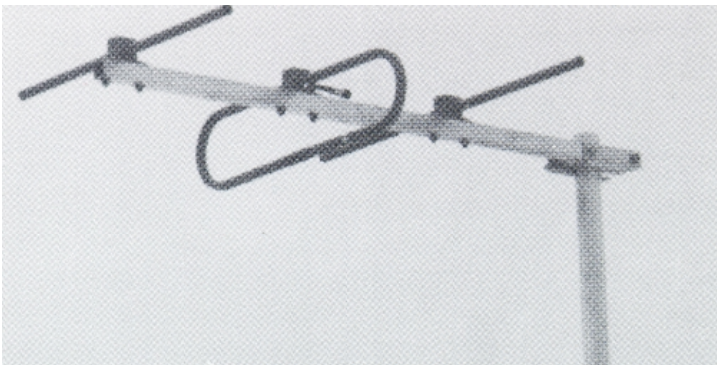

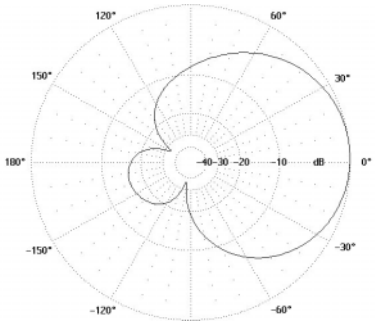

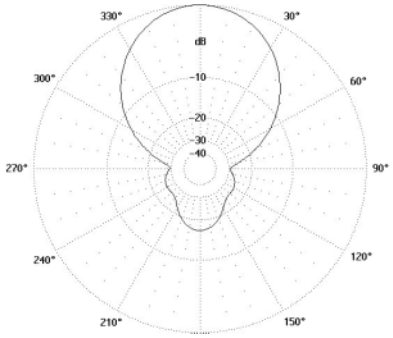

Type	AV1462-160
Frequency	146…174 MHz
Bandwidth	28 MHz in 8 MHz steps
Impedance	50 Ω DC grounded
VSWR	1,5 max
Polarisation	Horisontal or Vertical
Gain	7 dBi
E-plane 3 dB beamwidth	60°
H-plane 3 dB beamwidth	80°
Electrical downtilt	None
Front to back ratio	15 dB
Max. Continuous power	0,5 kW
RF-connector	N or 7/16 female
Operational windspeed	40 m/s (default)
Survival windspeed	55 m/s (default)
Wind area	0,2 m²
Dimensions (H x W x D) (∅ x H)	1400 x 900 x 140 mm
Weight	4 kg
Mounting diameter	∅ 30…115 mm pipe
Materials	Aluminium Glass reinforced PE
Options	-

Aerial Oy
Box 22
04401 Järvenpää
Finland
Tel. +358 9 2790 120
Fax +358 9 2910 210
http://www.aerial.fi
aerial@aerial.fi

YAGI ANTENNA AV1462-280

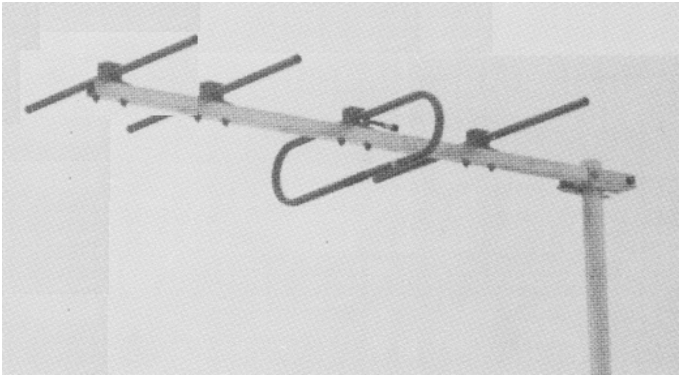

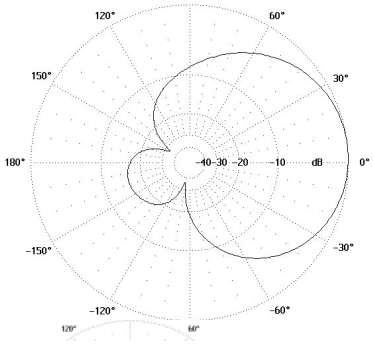

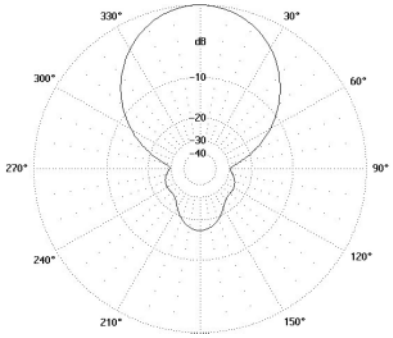

Type	AV1462-280
Frequency	275...285 MHz
Bandwidth	10 MHz
Impedance	50 Ω DC grounded
VSWR	1,5 max
Polarisation	Horisontal or Vertical
Gain	9 dBi
E-plane 3 dB beamwidth	60°
H-plane 3 dB beamwidth	60°
Electrical downtilt	None
Front to back ratio	15 dB
Max. Continuous power	0,5 kW
RF-connector	N or 7/16 female
Operational windspeed	40 m/s (default)
Survival windspeed	55 m/s (default)
Wind area	0,2 m²
Dimensions (H x W x D) (∅ x H)	1100 x 500 x 140 mm
Weight	3 kg
Mounting diameter	∅ 30...115 mm pipe
Materials	Aluminium Glass reinforced PE
Options	-

Aerial Oy
Box 22
04401 Järvenpää
Finland
Tel. +358 9 2790 120
Fax +358 9 2910 210
http://www.aerial.fi
aerial@aerial.fi

VEHICLE ANTENNA AV1469

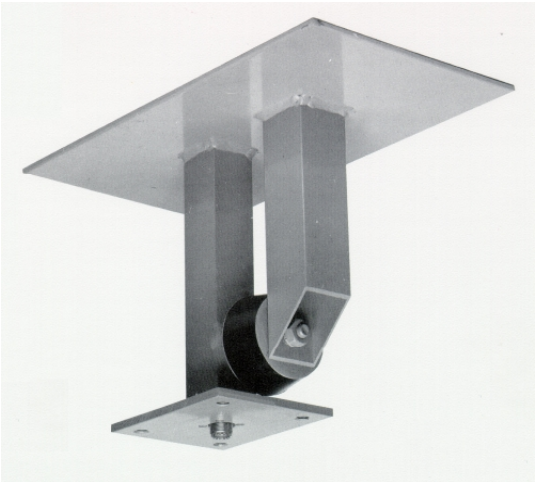

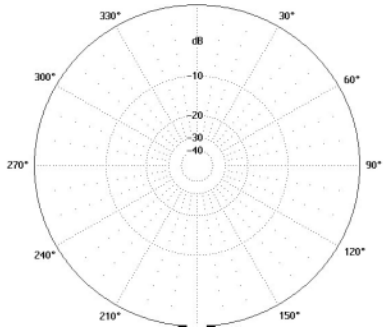

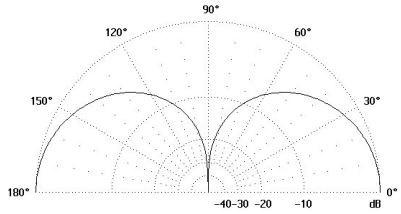

Elevation

Type	AV1469
Frequency	146...174 MHz
Bandwidth	7 MHz (5% of center frequency)
Impedance	50 Ω DC grounded
VSWR	1,5 max
Polarisation	Vertical
Gain	2 dBi
E-plane 3 dB beamwidth	70°
H-plane 3 dB beamwidth	360°
Electrical downtilt	None
Front to back ratio	- dB
Max. Continuous power	0,5 kW
RF-connector	N or UHF female
Operational windspeed	40 m/s (default)
Survival windspeed	55 m/s (default)
Wind area	0,1 m²
Dimensions (H x W x D) (∅ x H)	200 x 270 x 200 mm
Weight	1,4 kg
Mounting diameter	Minimum 1 m² metal plate ground plane. 4 pcs M10 screws.
Materials	Aluminium Glass reinforced PE
Options	-

Aerial Oy

Box 22
04401 Järvenpää
Finland

Tel. +358 9 2790 120
Fax +358 9 2910 210

http://www.aerial.fi
aerial@aerial.fi

BIDIRECTIONAL ANTENNA AV1481

In H-plane the nulls are towards the axis formed by the dipoles.

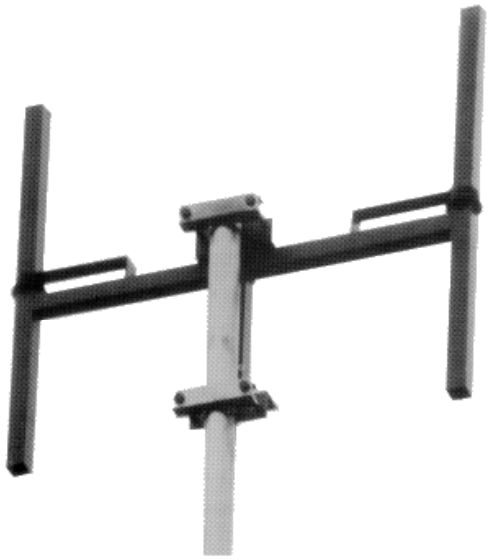

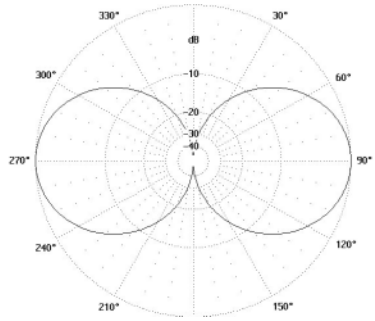

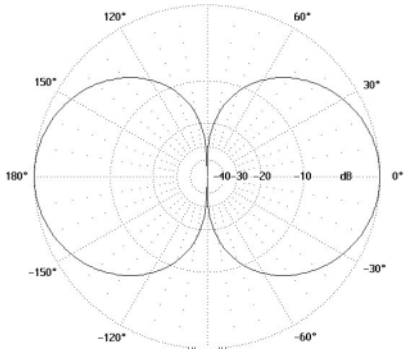

Type	AV1481
Frequency	AV1481-73 : 68…78 MHz AV1481-83 : 78…88 MHz
Bandwidth	10 MHz
Impedance	50 Ω DC grounded
VSWR	1,5 max
Polarisation	Vertical
Gain	5 dBi
E-plane 3 dB beamwidth	70 °
H-plane 3 dB beamwidth	60°
Electrical downtilt	None
Front to back ratio	DB
Max. Continuous power	0,5 kW
RF-connector	N or 7/16 female
Operational windspeed	40 m/s (default)
Survival windspeed	55 m/s (default)
Wind area	0,4 m²
Dimensions (H x W x D) (∅ x H)	1680 x 1800 x 100 mm
Weight	9 kg
Mounting diameter	∅ 30…115 mm pipe
Materials	Aluminium Glass reinforced PE
Options	-

Aerial Oy
Box 22
04401 Järvenpää
Finland
Tel. +358 9 2790 120
Fax +358 9 2910 210
http://www.aerial.fi
aerial@aerial.fi

BIDIRECTIONAL ANTENNA AV1482

In H-plane the nulls are towards the axis formed by the dipoles.

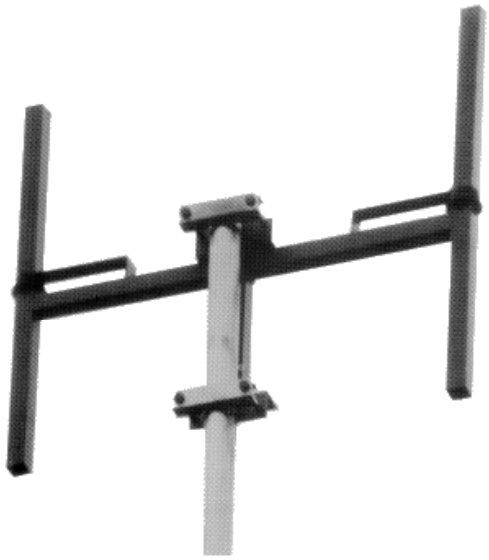

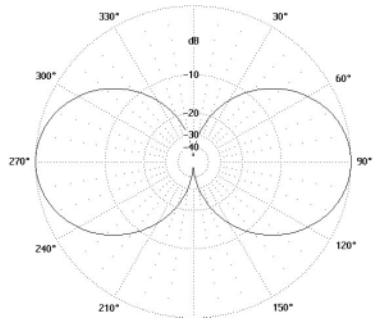

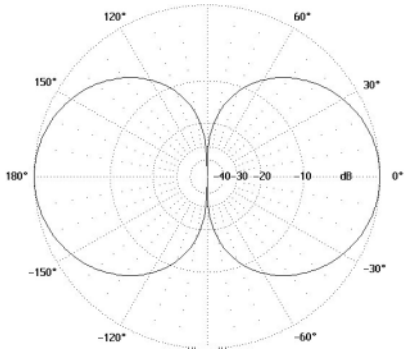

Type	AV1482
Frequency	146…174 MHz
Bandwidth	28 MHz
Impedance	50 Ω DC grounded
VSWR	1,5 max
Polarisation	Vertical
Gain	5 dBi
E-plane 3 dB beamwidth	70 °
H-plane 3 dB beamwidth	60°
Electrical downtilt	None
Front to back ratio	Db
Max. Continuous power	0,5 kW
RF-connector	N or 7/16 female
Operational windspeed	40 m/s (default)
Survival windspeed	55 m/s (default)
Wind area	0,2 m²
Dimensions (H x W x D) (∅ x H)	990 x 940 x 100 mm
Weight	5 kg
Mounting diameter	∅ 30…115 mm pipe
Materials	Aluminium Glass reinforced PE
Options	-

Aerial Oy
Box 22
04401 Järvenpää
Finland
Tel. +358 9 2790 120
Fax +358 9 2910 210
http://www.aerial.fi
aerial@aerial.fi

DIRECTIONAL BASE STATION ANTENNA AV1523-1

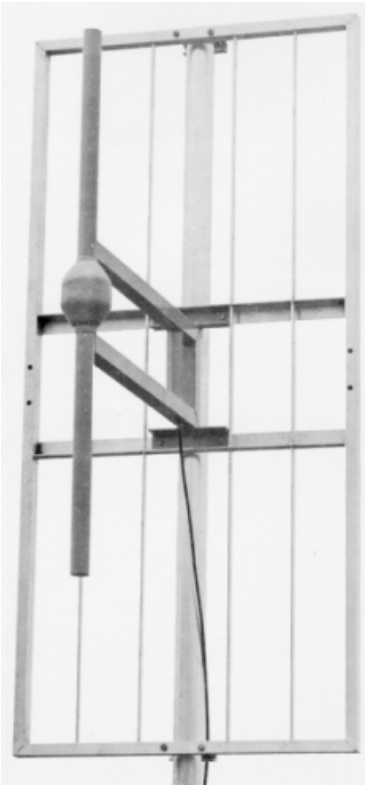

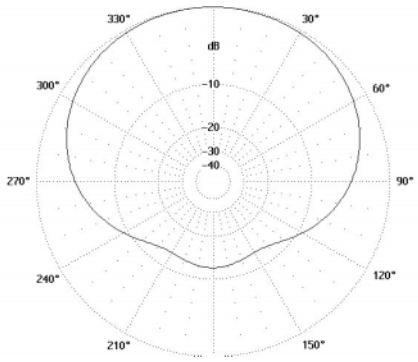

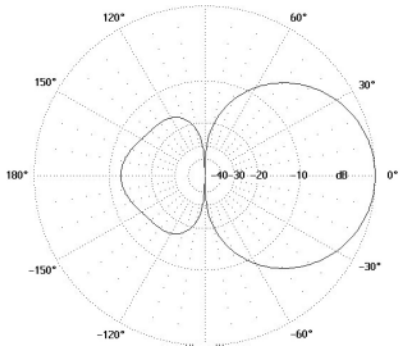

Type	AV1523-1
Frequency	118...144 MHz
Bandwidth	26 MHz
Impedance	50 Ω DC grounded
VSWR	1,5 max
Polarisation	Vertical
Gain	6 dBi
E-plane 3 dB beamwidth	70°
H-plane 3 dB beamwidth	160°
Electrical downtilt	None
Front to back ratio	12 dB
Max. Continuous power	0,5 kW
RF-connector	N or 7/16 female
Operational windspeed	40 m/s (default)
Survival windspeed	55 m/s (default)
Wind area	0,4 m²
Dimensions (H x W x D) (∅ x H)	2000 x 1000 x 1000 mm
Weight	15 kg
Mounting diameter	∅ 30...115 mm pipe
Materials	Aluminium Glass reinforced PE Hot dip galvanised steel
Options	-

Aerial Oy

Box 22
04401 Järvenpää
Finland

Tel. +358 9 2790 120
Fax +358 9 2910 210

http://www.aerial.fi
aerial@aerial.fi

DIRECTIONAL ANTENNA AV1523-2

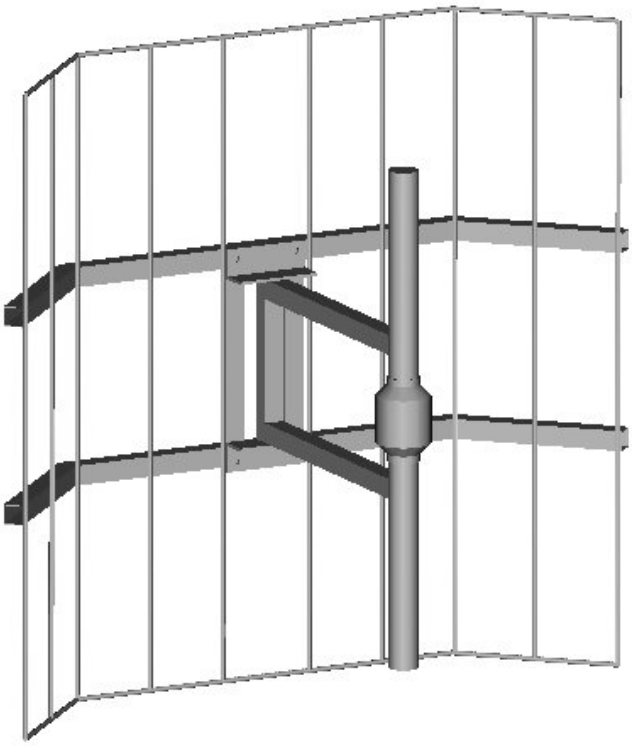

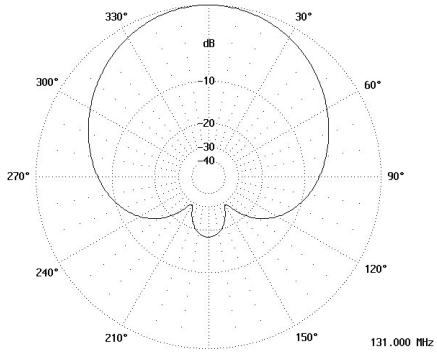

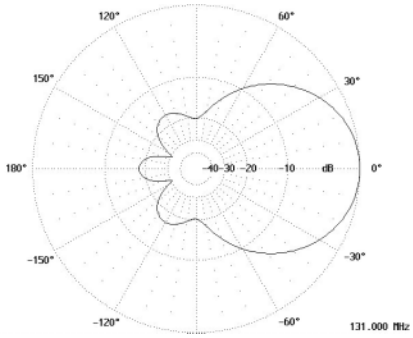

Type	AV1523-2
Frequency	118...144 MHz
Bandwidth	26 MHz
Impedance	50 Ω DC grounded
VSWR	1,5 max
Polarisation	Vertical
Gain	7 dBi
E-plane 3 dB beamwidth	70°
H-plane 3 dB beamwidth	90°
Electrical downtilt	None
Front to back ratio	15 dB
Max. Continuous power	0,5 kW
RF-connector	N or 7/16 female
Operational windspeed	40 m/s (default)
Survival windspeed	55 m/s (default)
Wind area	0,5 m²
Dimensions (H x W x D) (∅ x H)	2000 x 1580 x 640 mm
Weight	30 kg
Mounting diameter	∅ 30...115 mm pipe
Materials	Aluminium Glassfiber radome Hot dip galvanised steel
Options	-

Aerial Oy
Box 22
04401 Järvenpää
Finland
Tel. +358 9 2790 120
Fax +358 9 2910 210
http://www.aerial.fi
aerial@aerial.fi

DIRECTIONAL BASE STATION ANTENNA AV1523-3

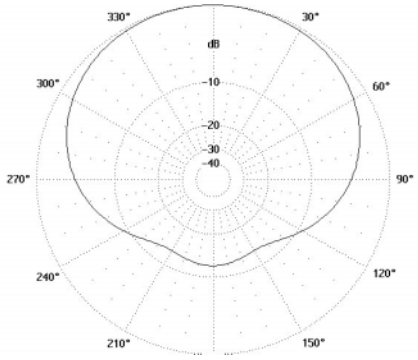

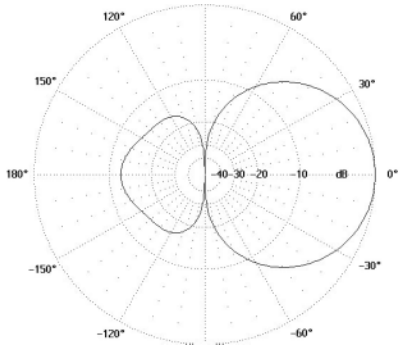

Type	AV1523-3
Frequency	146...174 MHz
Bandwidth	28 MHz
Impedance	50 Ω DC grounded
VSWR	1,5 max
Polarisation	Vertical
Gain	6 dBi
E-plane 3 dB beamwidth	70°
H-plane 3 dB beamwidth	160°
Electrical downtilt	None
Front to back ratio	12 dB
Max. Continuous power	0,5 kW
RF-connector	N or 7/16 female
Operational windspeed	40 m/s (default)
Survival windspeed	55 m/s (default)
Wind area	0,13 m²
Dimensions (H x W x D) (∅ x H)	1250 x 600 x 620 mm
Weight	8 kg
Mounting diameter	∅ 30...115 mm pipe
Materials	Aluminium Glass reinforced PE Hot dip galvanised steel
Options	-

Aerial Oy

Box 22
04401 Järvenpää
Finland

Tel. +358 9 2790 120
Fax +358 9 2910 210

http://www.aerial.fi
aerial@aerial.fi

DIRECTIONAL BASE STATION ANTENNA AV1523-3-2

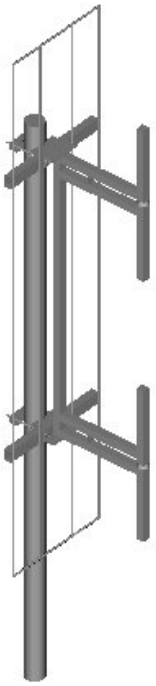

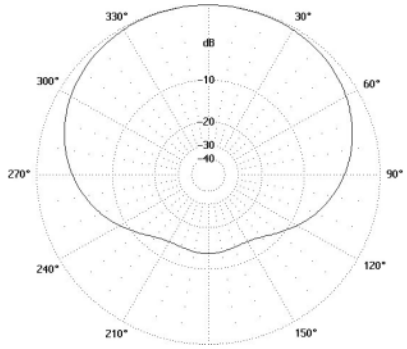

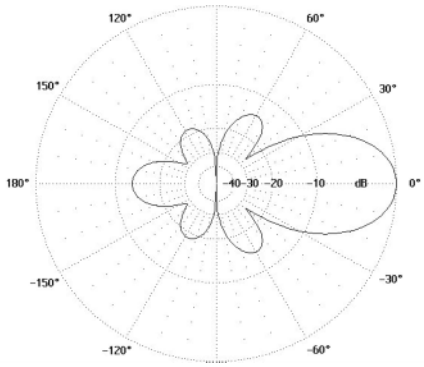

Type	AV1523-3-2
Frequency	146...174 MHz
Bandwidth	28 MHz
Impedance	50 Ω DC grounded
VSWR	1,5 max
Polarisation	Vertical
Gain	9 dBi
E-plane 3 dB beamwidth	35°
H-plane 3 dB beamwidth	160°
Electrical downtilt	None
Front to back ratio	12 dB
Max. Continuous power	0,5 kW
RF-connector	N or 7/16 female
Operational windspeed	40 m/s (default)
Survival windspeed	55 m/s (default)
Wind area	0,26 m²
Dimensions (H x W x D) (∅ x H)	2765 x 600 x 520 mm
Weight	17 kg
Mounting diameter	∅ 30...115 mm pipe
Materials	Aluminium Glass reinforced PE Hot dip galvanised steel
Options	-

Aerial Oy
Box 22
04401 Järvenpää
Finland
Tel. +358 9 2790 120
Fax +358 9 2910 210
http://www.aerial.fi
aerial@aerial.fi

DIRECTIONAL ANTENNA AV1523-4

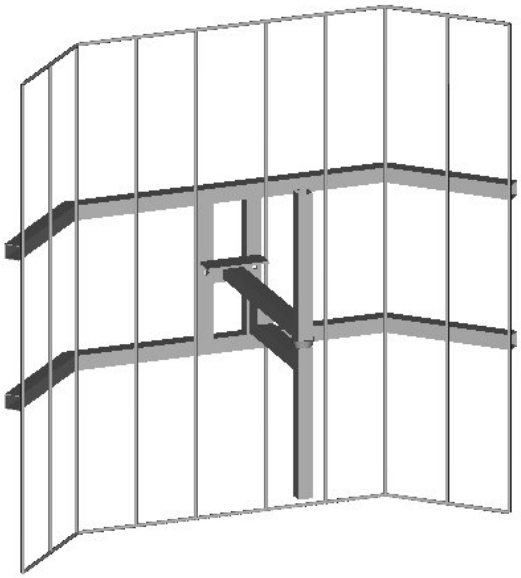

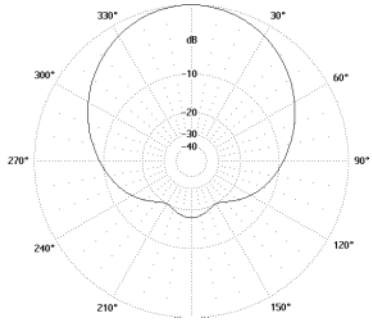

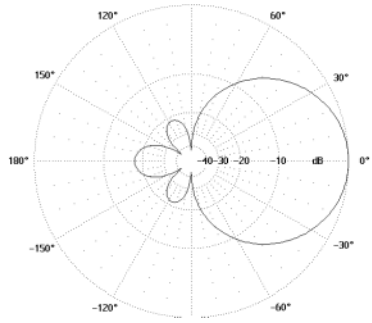

Type	AV1523-4
Frequency	146...174 MHz
Bandwidth	28 MHz
Impedance	50 Ω DC grounded
VSWR	1,5 max
Polarisation	Vertical
Gain	7 dBi
E-plane 3 dB beamwidth	70°
H-plane 3 dB beamwidth	90°
Electrical downtilt	None
Front to back ratio	15 dB
Max. Continuous power	0,5 kW
RF-connector	N or 7/16 female
Operational windspeed	40 m/s (default)
Survival windspeed	55 m/s (default)
Wind area	0,4 m²
Dimensions (H x W x D) (∅ x H)	1300x1350x630mm
Weight	20kg
Mounting diameter	∅ 30...115 mm pipe
Materials	Aluminium Hot dip galvanised steel Glass reinforced PE
Options	-

Aerial Oy
Box 22
04401 Järvenpää
Finland
Tel. +358 9 2790 120
Fax +358 9 2910 210
http://www.aerial.fi
aerial@aerial.fi

DIRECTIONAL BASE STATION ANTENNA AV1526

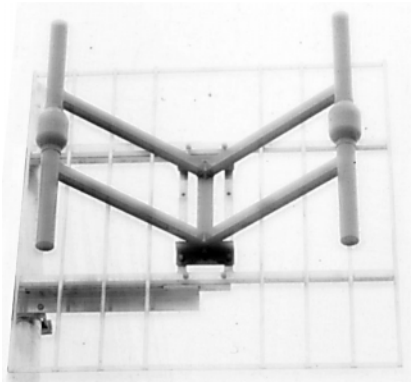

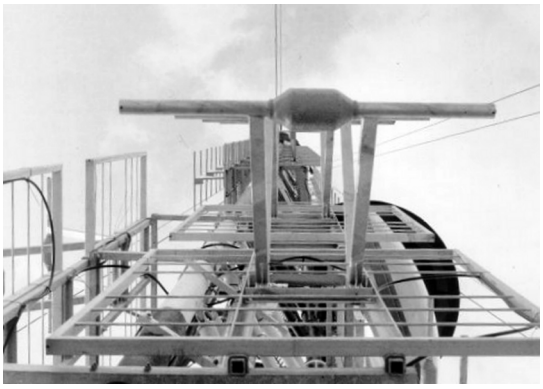

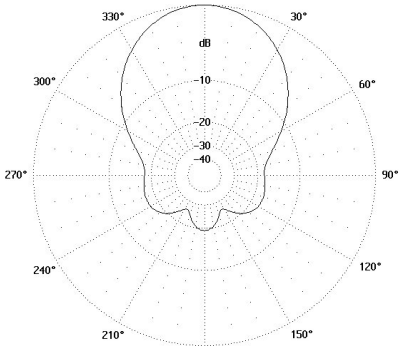

H-plane

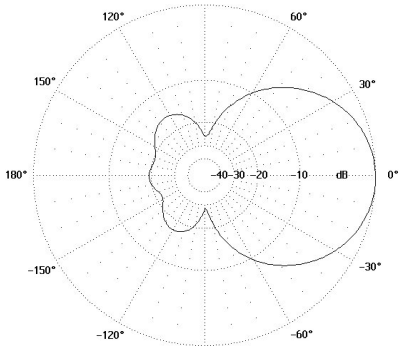

E-plane

Type	AVAV1526
Frequency	146…174 MHz
Bandwidth	28 MHz
Impedance	50 Ω DC grounded
VSWR	1,5 max
Polarisation	Horizontal or Vertical
Gain	9 dBi
E-plane 3 dB beamwidth	60°
H-plane 3 dB beamwidth	60°
Electrical downtilt	None
Front to back ratio	20 dB
Max. Continuous power	0,5 kW
RF-connector	N or 7/16 female
Operational windspeed	40 m/s (default)
Survival windspeed	55 m/s (default)
Wind area	0,8 m²
Dimensions (H x W x D) (∅ x H)	1300 x 1300 x 490 mm
Weight	20 kg
Mounting diameter	∅ 30…115 mm pipe
Materials	Aluminium Glassfiber radome Glass reinforced PE
Options	-

Aerial Oy
Box 22
04401 Järvenpää
Finland
Tel. +358 9 2790 120
Fax +358 9 2910 210
http://www.aerial.fi
aerial@aerial.fi

DIRECTIONAL BASE STATION ANTENNA AV1528

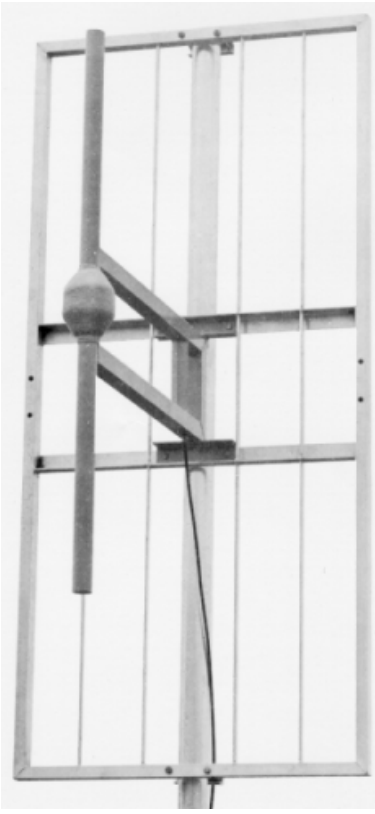

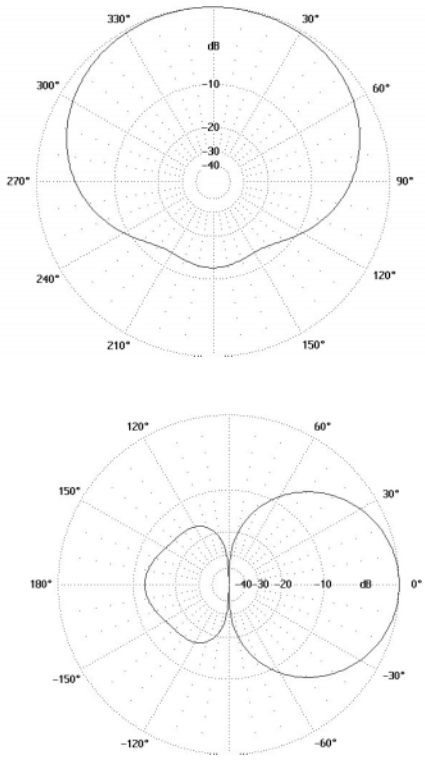

Type	AV1528
Frequency	68...88 MHz
Bandwidth	20 MHz
Impedance	50 Ω DC grounded
VSWR	1,5 max
Polarisation	Vertical
Gain	6 dBi
E-plane 3 dB beamwidth	70°
H-plane 3 dB beamwidth	160°
Electrical downtilt	None
Front to back ratio	12 dB
Max. Continuous power	0,5 kW
RF-connector	N or 7/16 female
Operational windspeed	40 m/s (default)
Survival windspeed	55 m/s (default)
Wind area	0,7 m²
Dimensions (H x W x D) (∅ x H)	2600 x 1200 x 1300 mm
Weight	20 kg
Mounting diameter	∅ 30...115 mm pipe
Materials	Aluminium Glass reinforced PE Hot dip galvanised steel
Options	-

Aerial Oy
Box 22
04401 Järvenpää
Finland
Tel. +358 9 2790 120
Fax +358 9 2910 210
http://www.aerial.fi
aerial@aerial.fi

DIRECTIONAL BASE STATION ANTENNA AV1543

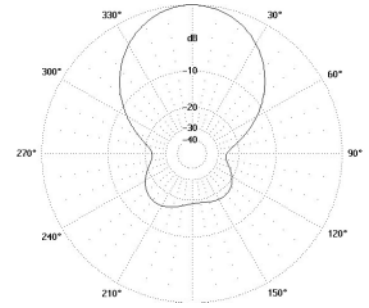

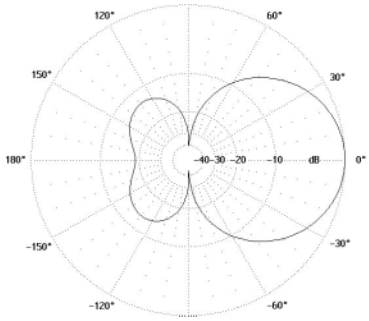

Type	AV1543
Frequency	118...144 MHz
Bandwidth	26 MHz
Impedance	50 Ω DC grounded
VSWR	1,3 typical 1,5 max
Polarisation	Vertical
Gain	9 dBi
E-plane 3 dB beamwidth	75°
H-plane 3 dB beamwidth	60°
Electrical downtilt	None
Front to back ratio	18 dB
Max. Continuous power	0,5 kW
RF-connector	N or 7/16 female
Operational windspeed	40 m/s (default)
Survival windspeed	55 m/s (default)
Wind area	0,7 m²
Dimensions (H x W x D) (∅ x H)	1480 x 1940 x 660 mm
Weight	50 kg
Mounting diameter	∅ 30...115 mm pipe
Materials	Aluminium Hot dip galvanised steel Glassfiber radome Glass reinforced PE
Options	-

Aerial Oy

Box 22
04401 Järvenpää
Finland

Tel. +358 9 2790 120
Fax +358 9 2910 210

http://www.aerial.fi
aerial@aerial.fi

DIRECTIONAL BASE STATION ANTENNA AV1543-145

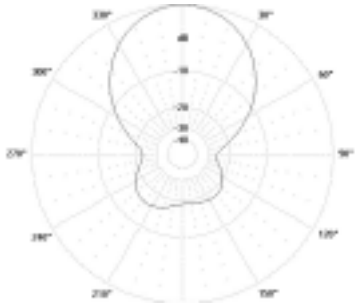

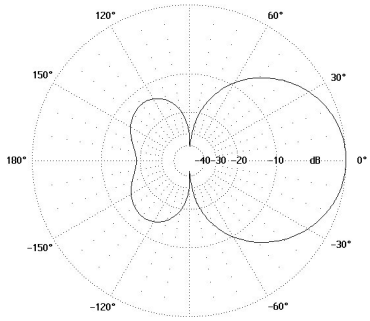

Type	AV1543-145
Frequency	130...160 MHz
Bandwidth	30 MHz
Impedance	50 Ω DC grounded
VSWR	1,3 typical 1,5 max
Polarisation	Vertical
Gain	9 dBi
E-plane 3 dB beamwidth	75°
H-plane 3 dB beamwidth	60°
Electrical downtilt	None
Front to back ratio	18 dB
Max. Continuous power	0,5 kW
RF-connector	N or 7/16 female
Operational windspeed	40 m/s (default)
Survival windspeed	55 m/s (default)
Wind area	0,7 m²
Dimensions (H x W x D) (∅ x H)	1480 x 1940 x 660 mm
Weight	50/20 kg (St-/Al-version)
Mounting diameter	∅ 30...115 mm pipe
Materials	Aluminium Hot dip galvanised steel Glassfiber radome Glass reinforced PE
Options	-

Aerial Oy

Box 22
04401 Järvenpää
Finland

Tel. +358 9 2790 120
Fax +358 9 2910 210

http://www.aerial.fi
aerial@aerial.fi

OMNIDIRECTIONAL BASE STATION ANTENNA FOR 1...4 CHANNELS AV1705

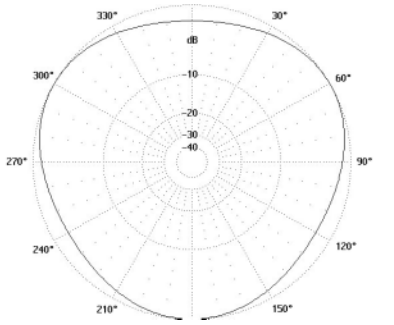

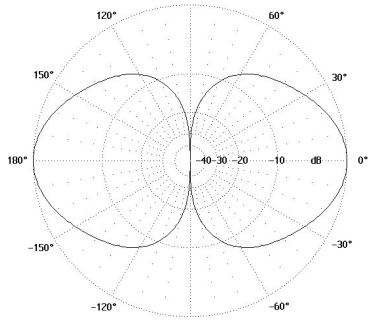

Type	AV1705
Frequency	146...174 MHz
Bandwidth	28 MHz
Impedance	50 Ω DC grounded
VSWR	1,5 max
Polarisation	Vertical
Gain	2 dBi
E-plane 3 dB beamwidth	60°
H-plane 3 dB beamwidth	360° within ±1,5 dB
Electrical downtilt	None
Front to back ratio	- dB
Max. Continuous power	0,5 kW
RF-connector	N or 7/16 female
Operational windspeed	40 m/s (default)
Survival windspeed	55 m/s (default)
Wind area	0,8 m²
Dimensions (H x W x D) (∅ x H)	824 x 1000 mm
Weight	53 kg
Mounting diameter	∅ 30...115 mm pipe
Materials	Aluminium Glass reinforced PE
Options	Multitier antennas with 1...8 tiers.

Aerial Oy

Box 22
04401 Järvenpää
Finland

Tel. +358 9 2790 120
Fax +358 9 2910 210

http://www.aerial.fi
aerial@aerial.fi

HIGH GAIN BASE STATION ANTENNA AV1910

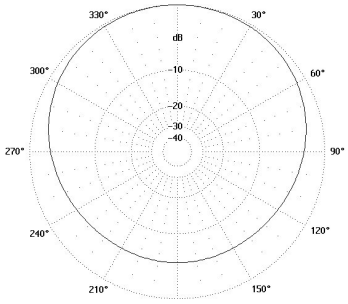

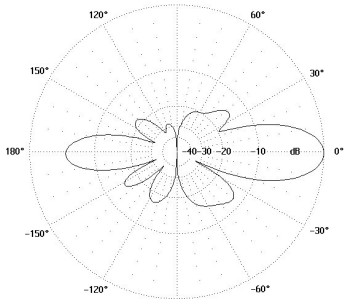

Type	AV1910
Frequency	118…144 MHz
Bandwidth	26 MHz
Impedance	50 Ω DC grounded
VSWR	1,5 max
Polarisation	Vertical
Gain	10 dBi
E-plane 3 dB beamwidth	14°
H-plane 3 dB beamwidth	180°/dependent on mounting
Electrical downtilt	None
Front to back ratio	6 dB/dependent on mounting
Max. Continuous power	0,5 kW
RF-connector	N or 7/16 female
Operational windspeed	40 m/s (default)
Survival windspeed	55 m/s (default)
Wind area	0,8 m²
Dimensions (H x W x D) (∅ x H)	6000 x 450 x 75 mm
Weight	25 kg
Mounting diameter	∅ 30…115 mm pipe
Materials	Aluminium Glassfiber radome Glass reinforced PE
Options	Available with different electrical tilt angles.

Aerial Oy

Box 22
04401 Järvenpää
Finland

Tel. +358 9 2790 120
Fax +358 9 2910 210

http://www.aerial.fi
aerial@aerial.fi

OMNIDIRECTIONAL BASE STATION ANTENNA AV1911

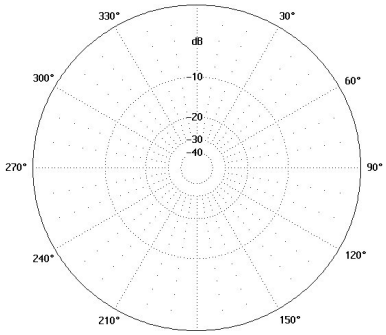

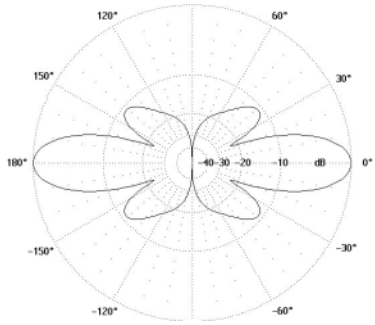

Type	AV1911
Frequency	146...174 MHz
Bandwidth	7 MHz (5% of center frequency)
Impedance	50 Ω DC grounded
VSWR	1,5 max
Polarisation	Vertical
Gain	7 dBi
E-plane 3 dB beamwidth	20°
H-plane 3 dB beamwidth	360° within ±1,5 dB
Electrical downtilt	None
Front to back ratio	-dB
Max. Continuous power	0,5 kW
RF-connector	N or 7/16 female
Operational windspeed	40 m/s (default)
Survival windspeed	55 m/s (default)
Wind area	0,6 m²
Dimensions (H x W x D) (∅ x H)	6000 x 100 (top 70) mm
Weight	12 kg
Mounting diameter	∅ 30...115 mm pipe
Materials	Aluminium Glassfiber radome Glass reinforced PE
Options	Center frequency

Aerial Oy

Box 22
04401 Järvenpää
Finland

Tel. +358 9 2790 120
Fax +358 9 2910 210

http://www.aerial.fi
aerial@aerial.fi

HIGH GAIN BASE STATION ANTENNA AV1912

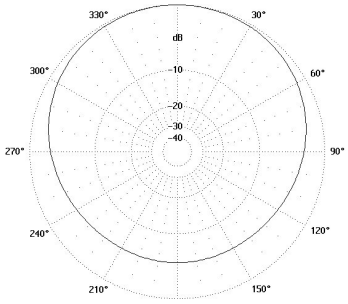

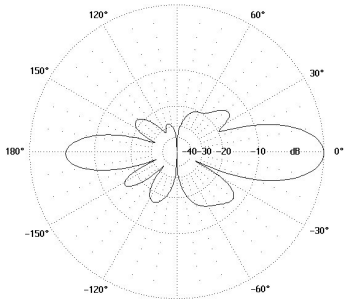

Type	AV1912
Frequency	146...174 MHz
Bandwidth	28 MHz
Impedance	50 Ω DC grounded
VSWR	1,5 max
Polarisation	Vertical
Gain	10 dBi
E-plane 3 dB beamwidth	14°
H-plane 3 dB beamwidth	180°/dependent on mounting
Electrical downtilt	None
Front to back ratio	6 dB/dependent on mounting
Max. Continuous power	0,5 kW
RF-connector	N or 7/16 female
Operational windspeed	40 m/s (default)
Survival windspeed	55 m/s (default)
Wind area	0,65 m²
Dimensions (H x W x D) (∅ x H)	5000 x 400 x 75 mm
Weight	20 kg
Mounting diameter	∅ 30...115 mm pipe
Materials	Aluminium Glass reinforced PE
Options	-

Aerial Oy

Box 22
04401 Järvenpää
Finland

Tel. +358 9 2790 120
Fax +358 9 2910 210

http://www.aerial.fi
aerial@aerial.fi

HIGH GAIN BASE STATION ANTENNA AV1913

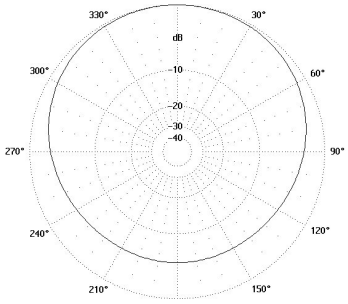

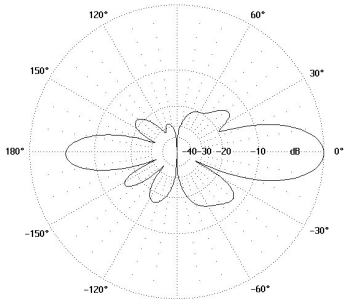

Type	AV1913
Frequency	214...234 MHz
Bandwidth	20 MHz
Impedance	50 Ω DC grounded
VSWR	1,5 max
Polarisation	Vertical
Gain	10 dBi
E-plane 3 dB beamwidth	14°
H-plane 3 dB beamwidth	180°/dependent on mounting
Electrical downtilt	None
Front to back ratio	6 dB/dependent on mounting
Max. Continuous power	0,5 kW
RF-connector	N or 7/16 female
Operational windspeed	40 m/s (default)
Survival windspeed	55 m/s (default)
Wind area	0,50 m²
Dimensions (H x W x D) (∅ x H)	3900 x 350 x 75 mm
Weight	18 kg
Mounting diameter	∅ 30...115 mm pipe
Materials	Aluminium Glass reinforced PE
Options	-

Aerial Oy
Box 22
04401 Järvenpää
Finland
Tel. +358 9 2790 120
Fax +358 9 2910 210
http://www.aerial.fi
aerial@aerial.fi

OMNIDIRECTIONAL BASE STATION ANTENNA AV1919

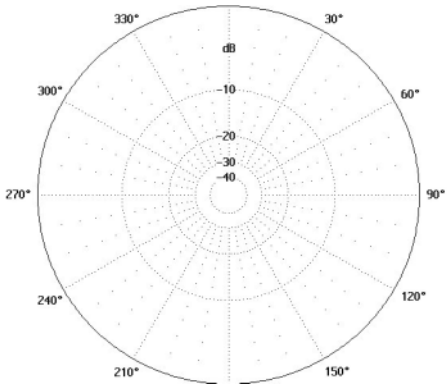

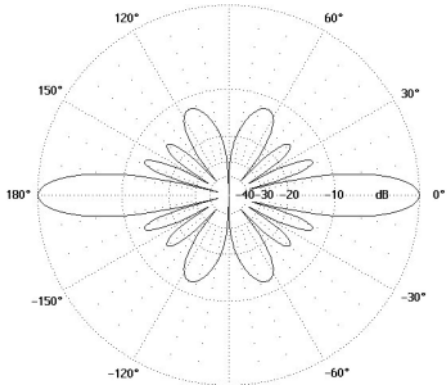

Type	AV1919
Frequency	223...230 MHz
Bandwidth	7 MHz
Impedance	50 Ω DC grounded
VSWR	1,5 max
Polarisation	Vertical
Gain	8 dBi
E-plane 3 dB beamwidth	13°
H-plane 3 dB beamwidth	360° within ±1,5 dB
Electrical downtilt	None
Front to back ratio	- dB
Max. Continuous power	0,5 kW
RF-connector	N or 7/16 female
Operational windspeed	40 m/s (default)
Survival windspeed	55 m/s (default)
Wind area	0,52 m²
Dimensions (H x W x D) (∅ x H)	5900 x 100 mm
Weight	20 kg
Mounting diameter	∅ 30...115 mm pipe
Materials	Aluminium Glassfiber radome Glass reinforced PE
Options	High power version with EIA 7/8'' Flange and 1 kW max. power

Aerial Oy

Box 22
04401 Järvenpää
Finland

Tel. +358 9 2790 120
Fax +358 9 2910 210

http://www.aerial.fi
aerial@aerial.fi

LOW GAIN FM ANTENNA AV1311-95

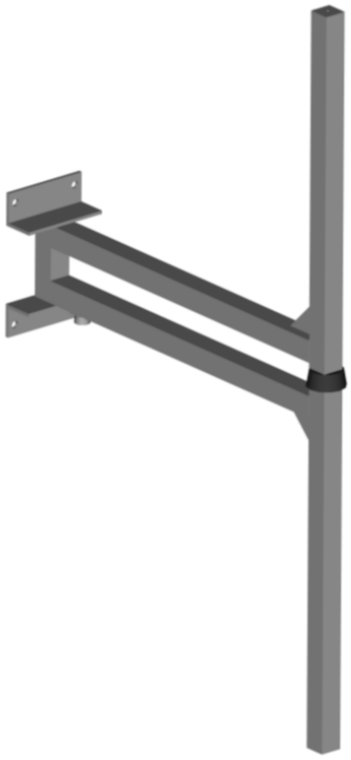

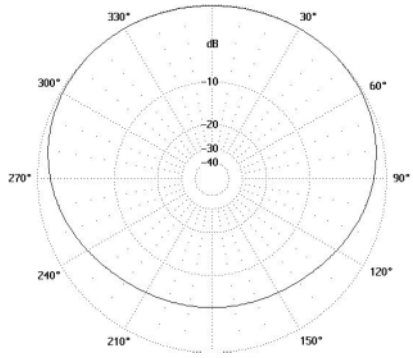

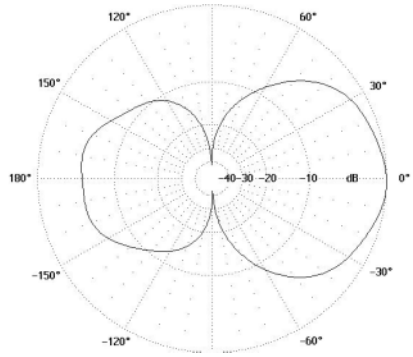

Type	AV1311-95
Frequency	88...108 MHz
Bandwidth	20 MHz
Impedance	50 Ω DC grounded
VSWR	1,5 max
Polarisation	Vertical
Gain	2 dBi
E-plane 3 dB beamwidth	70°
H-plane 3 dB beamwidth	200°/depending on mounting
Electrical downtilt	None
Front to back ratio	6 dB/depending on mounting
Max. Continuous power	0,5 kW
RF-connector	N or 7/16 female
Operational windspeed	40 m/s (default)
Survival windspeed	55 m/s (default)
Wind area	0,1 m²
Dimensions (H x W x D) (∅ x H)	1345 x 760 x 160 mm
Weight	6 kg
Mounting diameter	∅ 30...115 mm pipe
Materials	Aluminium Glass reinforced PE
Options	Hot dip galvanised version.

Aerial Oy

Box 22
04401 Järvenpää
Finland

Tel. +358 9 2790 120
Fax +358 9 2910 210

http://www.aerial.fi
aerial@aerial.fi

LOW GAIN FM ANTENNA AV1311-95-2kW

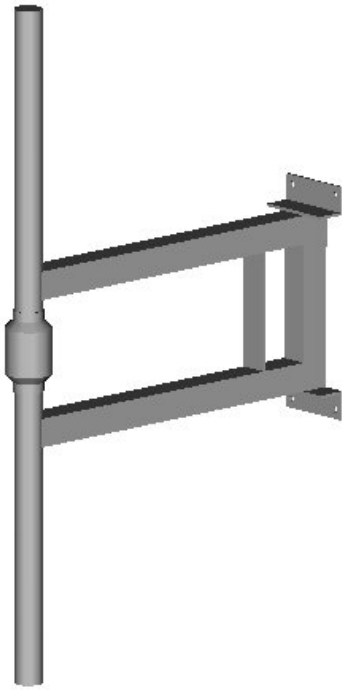

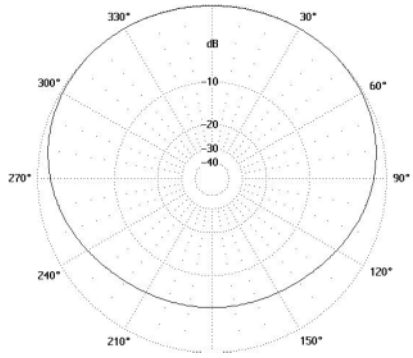

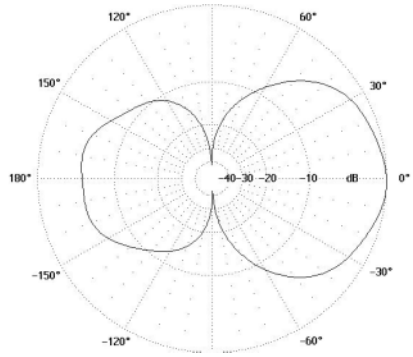

Type	AV1311-95-2kW
Frequency	88...108 MHz
Bandwidth	20 MHz
Impedance	50 Ω DC grounded
VSWR	1,3 max
Polarisation	Vertical
Gain	2 dBi
E-plane 3 dB beamwidth	70°
H-plane 3 dB beamwidth	200°/depending on mounting
Electrical downtilt	None
Front to back ratio	6 dB/depending on mounting
Max. Continuous power	2 kW or 6 kW
RF-connector	7/16 female or 7/8'' EIA
Operational windspeed	40 m/s (default)
Survival windspeed	55 m/s (default)
Wind area	0,1 m²
Dimensions (H x W x D) (∅ x H)	1410 x 850 x 160 mm
Weight	8 kg
Mounting diameter	∅ 30...115 mm pipe
Materials	Aluminium Glass reinforced PE Glassfiber radome
Options	Hot dip galvanised version.

Aerial Oy
Box 22
04401 Järvenpää
Finland
Tel. +358 9 2790 120
Fax +358 9 2910 210
http://www.aerial.fi
aerial@aerial.fi

FULL WAVE DIPOLE AV1317

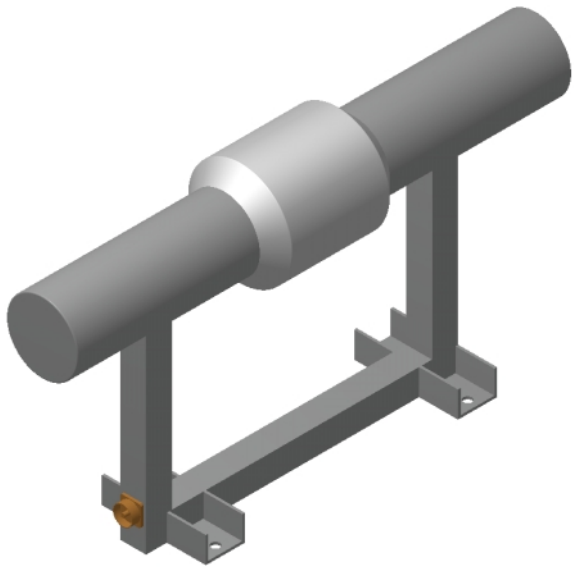

Type	AV1317
Frequency	174...240 MHz
Bandwidth	66 MHz
Impedance	50 Ω DC grounded
VSWR	1,3 max
Polarisation	Vertical
Gain	3,5 dBi
E-plane 3 dB beamwidth	45°
H-plane 3 dB beamwidth	200°/depending on mounting
Electrical downtilt	None
Front to back ratio	3 dB/depending on mounting
Max. Continuous power	2 kW
RF-connector	7/16 female
Operational windspeed	40 m/s (default)
Survival windspeed	55 m/s (default)
Wind area	0,2 m²
Dimensions (H x W x D) (∅ x H)	1000 x 450 x 160 mm
Weight	8 kg
Mounting diameter	∅ 30...115 mm pipe
Materials	Aluminium Glassfiber radome Glass reinforced PE
Options	Connector type

Aerial Oy
Box 22
04401 Järvenpää
Finland
Tel. +358 9 2790 120
Fax +358 9 2910 210
http://www.aerial.fi
aerial@aerial.fi

MEDIUM GAIN FM ANTENNA AV1440-95

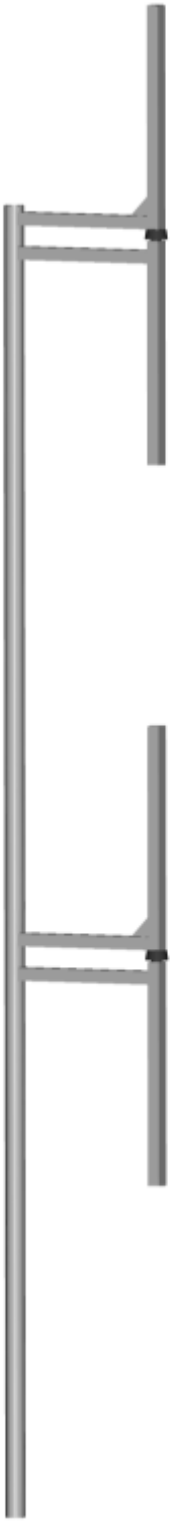

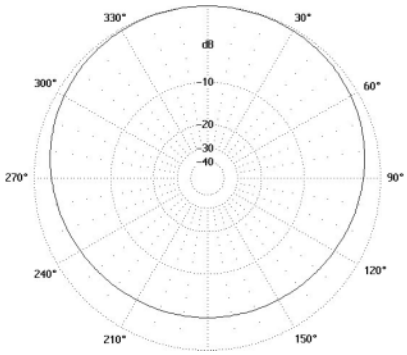

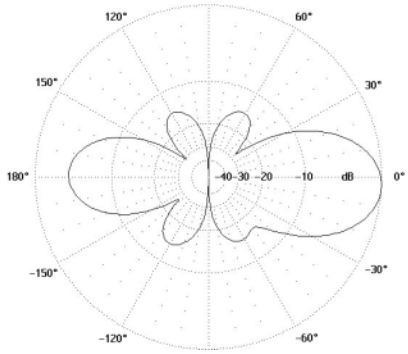

Type	AV1440-95
Frequency	3 kW: 88…108 MHz (Av1440-95-3kW) 2 kW: 88…108 MHz (Av1440-95-2kW) 1 kW: 88…108 MHz (Av1440-95-1kW) 0,5 kW: 88…108 MHz (Av1440-95)
Bandwidth	3 kW: 20 MHz (Av1440-95-3kW) 2 kW: 20 MHz (Av1440-95-2kW) 1 kW: 20 MHz (Av1440-95-1kW) 0,5 kW: 20 MHz (Av1440-95)
Impedance	50 Ω DC grounded
VSWR	1,4 max
Polarisation	Vertical
Gain	6 dBi
E-plane 3 dB beamwidth	30°
H-plane 3 dB beamwidth	180°/depending on mounting
Electrical downtilt	None
Front to back ratio	6 dB/depending on mounting
Max. Continuous power	0,5 or 3 kW
RF-connector	N ,7/16 female or 7/8'' EIA
Operational windspeed	40 m/s (default)
Survival windspeed	55 m/s (default)
Wind area	0,4 m²
Dimensions (H x W x D)	4600 x 570 x 60 mm
Weight	14 kg
Mounting diameter	∅ 30…115 mm pipe
Materials	Aluminium Glass reinforced PE
Options	Hot dip galvanised steel version. Low SWR version. High power version.

Aerial Oy

Box 22
04401 Järvenpää
Finland

Tel. +358 9 2790 120
Fax +358 9 2910 210

http://www.aerial.fi
aerial@aerial.fi

GROUND PLANE ANTENNA AV1460-95

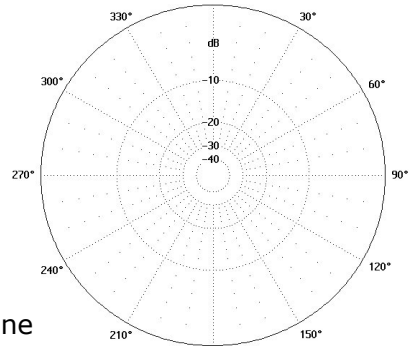

H-plane

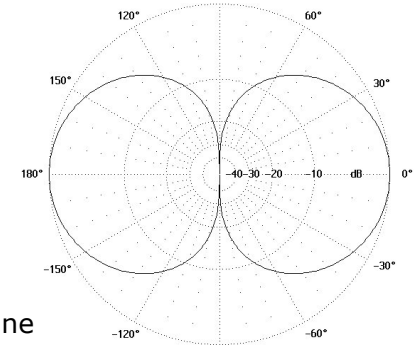

E-plane

The antenna is attached with two M10x20 bolts (material A2). The ground plane elements can be detached for easy transportation.

Type	AV1460-95
Frequency	88…108 MHz
Bandwidth	5%
Impedance	50 Ω DC grounded
VSWR	1,5 max
Polarisation	Vertical
Gain	2 dBi
E-plane 3 dB beamwidth	80°
H-plane 3 dB beamwidth	N/A
Electrical downtilt	None
Front to back ratio	N/A
Max. Continuous power	0,5 kW
RF-connector	N or 7/16 female
Operational windspeed	40 m/s (default)
Survival windspeed	55 m/s (default)
Wind area	0,1 m²
Dimensions (H x W x D) (∅ x H)	1100 x 1100 x 1100 mm
Weight	3 kg
Mounting diameter	∅ 40…60 mm pipe
Materials	Aluminium Glass reinforced PE
Options	-

Aerial Oy
Box 22
04401 Järvenpää
Finland
Tel. +358 9 2790 120
Fax +358 9 2910 210
http://www.aerial.fi
aerial@aerial.fi

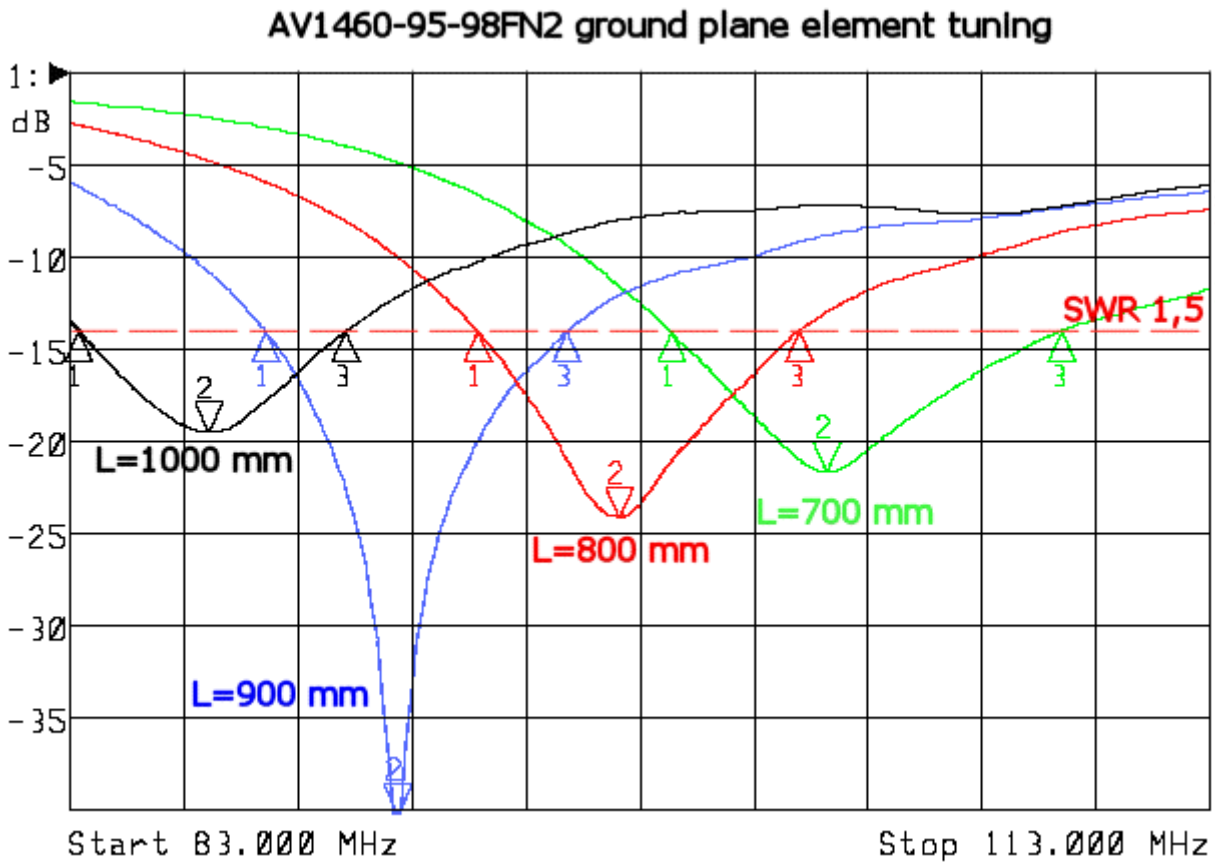

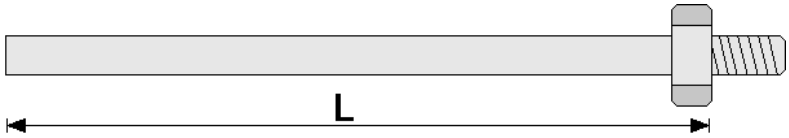

Aerial Oy
Box 22
04401 Järvenpää
Finland
Tel. +358 9 2790 120
Fax +358 9 2910 210
http://www.aerial.fi
aerial@aerial.fi

2-ELEMENT FM YAGI ANTENNA AV1486-A4

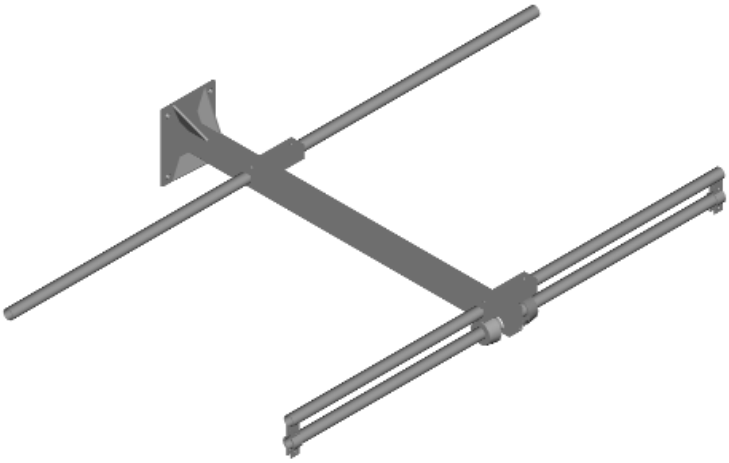

All elements are detachable
for easy transportation!

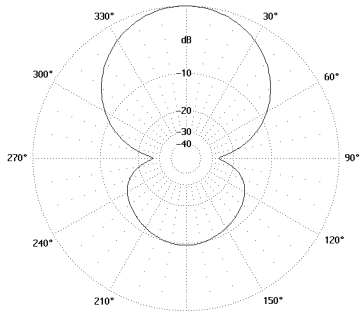

E-PLANE

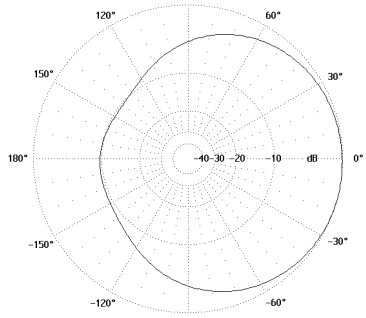

H-PLANE

Type	AV1486-A4
Frequency	88...108 MHz
Bandwidth	20 MHz
Impedance	50 Ω DC grounded
VSWR	1,5 max
Polarisation	Horisontal or vertical
Gain	6 dBi
E-plane 3 dB beamwidth	70°
H-plane 3 dB beamwidth	150°
Electrical downtilt	None
Front to back ratio	12 dB
Max. Continuous power	0,5 kW
RF-connector	N or 7/16 female
Operational windspeed	40 m/s (default)
Survival windspeed	55 m/s (default)
Wind area	0,2 m²
Dimensions (H x W x D)	200 x 1700 x 900 mm
Weight	12 kg
Mounting diameter	∅ 60...115 mm pipe
Materials	Stainless steel A4 Glass reinforced PE
Options	Also available as lighter Aluminium version

Aerial Oy

Box 22
04401 Järvenpää
Finland

Tel. +358 9 2790 120
Fax +358 9 2910 210

http://www.aerial.fi
aerial@aerial.fi

3-ELEMENT FM YAGI ANTENNA AV1487-A4

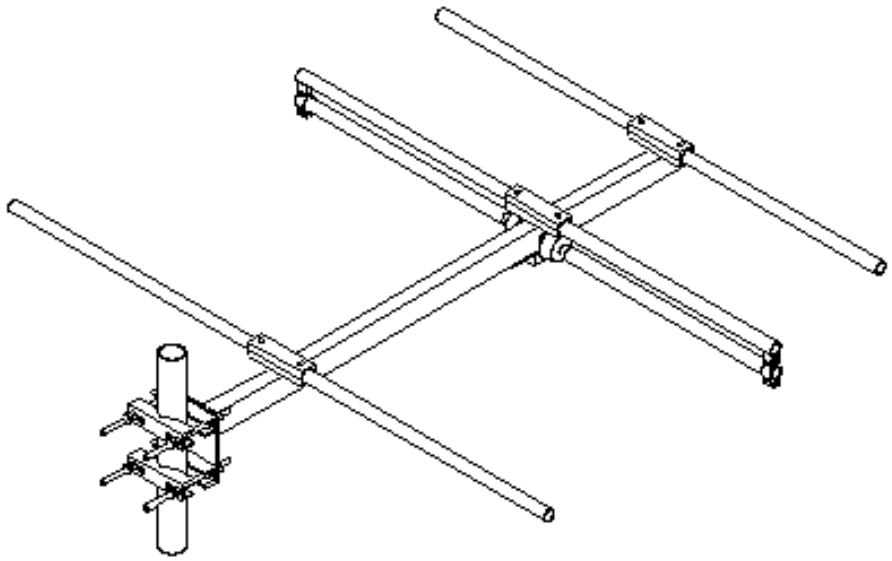

All elements are detachable
for easy transportation!

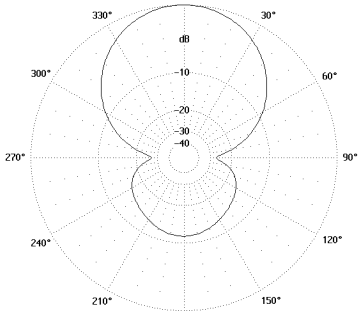

E-PLANE

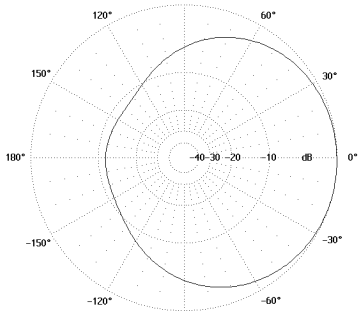

H-PLANE

Type	AV1487-A4
Frequency	88 ...108 MHz
Bandwidth	20 MHz
Impedance	50 Ω DC grounded
VSWR	1,5 max
Polarisation	Horisontal or vertical
Gain	7 dBi
E-plane 3 dB beamwidth	65°
H-plane 3 dB beamwidth	140°
Electrical downtilt	None
Front to back ratio	12 dB
Max. Continuous power	0,5 kW
RF-connector	N or 7/16 female
Operational windspeed	40 m/s (default)
Survival windspeed	55 m/s (default)
Wind area	0,25 m²
Dimensions (H x W x D)	200 x 1700 x 1600 mm
Weight	19 kg
Mounting diameter	∅ 60...115 mm pipe
Materials	Stainless steel A4 Glass reinforced PE
Options	Also available as lighter Aluminium version

Aerial Oy

Box 22
04401 Järvenpää
Finland

Tel. +358 9 2790 120
Fax +358 9 2910 210

http://www.aerial.fi
aerial@aerial.fi

4-ELEMENT FM YAGI ANTENNA AV1488-A4

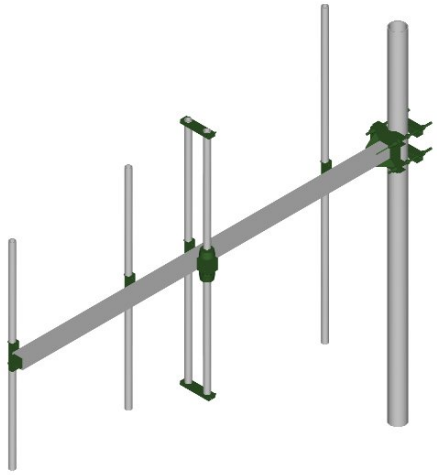

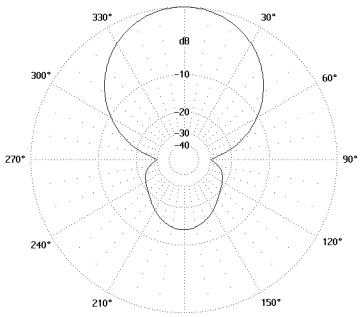

E-PLANE

All elements are detachable
for easy transportation!

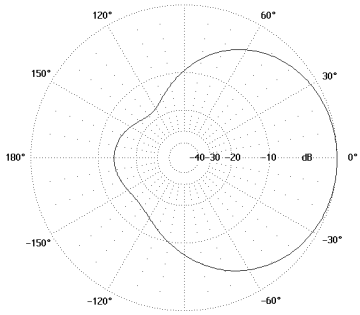

H-PLANE

Type	AV1488-A4
Frequency	88 ...108 MHz
Bandwidth	20 MHz
Impedance	50 Ω DC grounded
VSWR	1,5 max
Polarisation	Horisontal or vertical
Gain	8 dBi
E-plane 3 dB beamwidth	60°
H-plane 3 dB beamwidth	110°
Electrical downtilt	None
Front to back ratio	14 dB
Max. Continuous power	0,5 kW
RF-connector	N or 7/16 female
Operational windspeed	40 m/s (default)
Survival windspeed	55 m/s (default)
Wind area	0,3 m²
Dimensions (H x W x D)	200 x 1700 x 2130 mm
Weight	27 kg
Mounting diameter	∅ 60...115 mm pipe
Materials	A4 Steel Glass reinforced PE
Options	Also available as lghter aluminium version.

Aerial Oy

Box 22
04401 Järvenpää
Finland

Tel. +358 9 2790 120
Fax +358 9 2910 210

http://www.aerial.fi
aerial@aerial.fi

DIRECTIONAL ANTENNA AV1527

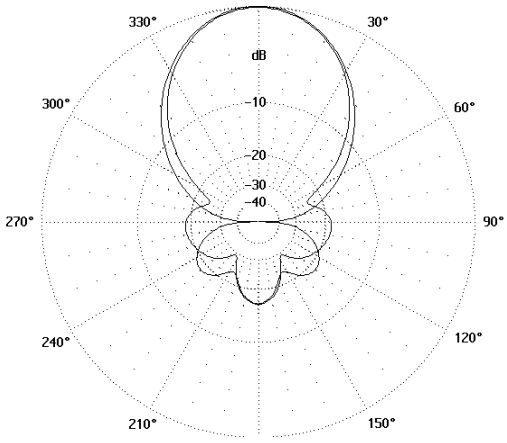

Type	AV1527
Frequency	175...230 MHz
Bandwidth	55 MHz
Impedance	50 Ω DC grounded
VSWR	1,2 max
Polarisation	Horisontal or vertical
Gain	10 dBi
E-plane 3 dB beamwidth	55°
H-plane 3 dB beamwidth	55°
Electrical downtilt	None
Front to back ratio	16 dB
Max. Continuous power	1 kW
RF-connector	7/16 female or 7/8'' EIA
Operational windspeed	40 m/s (default)
Survival windspeed	55 m/s (default)
Wind area	0,3 m²
Dimensions (H x W x D)	1300 x 1300 x 500 mm
Weight	57 kg
Mounting diameter	∅ 30...115 mm pipe
Materials	Hot dip galvanised steel Glassfiber radome Glass reinforced PE
Options	Aluminium version Different power ratings

Aerial Oy

Box 22
04401 Järvenpää
Finland

Tel. +358 9 2790 120
Fax +358 9 2910 210

http://www.aerial.fi
aerial@aerial.fi

DIRECTIONAL FM ANTENNA AV1528-4-95

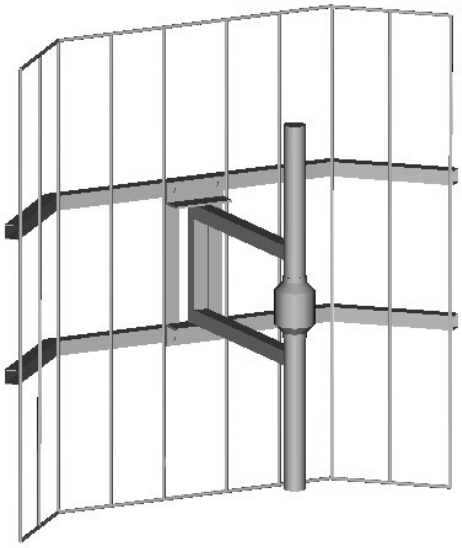

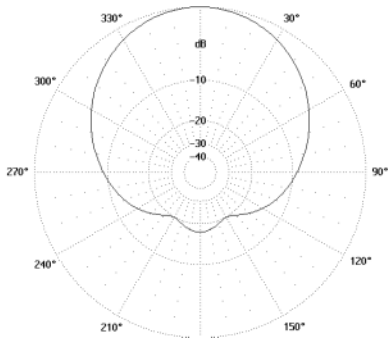

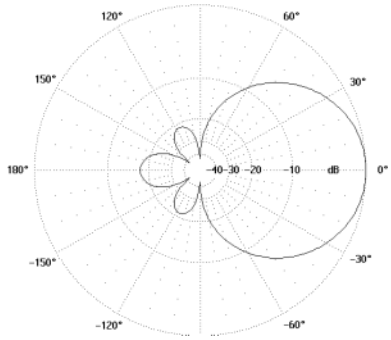

Type	AV1528-4-95
Frequency	88..108 MHz
Bandwidth	20 MHz
Impedance	50 Ω DC grounded
VSWR	1,5 max
Polarisation	Vertical
Gain	7 dBi
E-plane 3 dB beamwidth	70°
H-plane 3 dB beamwidth	90°
Electrical downtilt	None
Front to back ratio	15 dB
Max. Continuous power	0,5 or 2 kW
RF-connector	N or 7/16 female
Operational windspeed	40 m/s (default)
Survival windspeed	55 m/s (default)
Wind area	0,5 m²
Dimensions (H x W x D)	1900 x 2000 x 940 mm
Weight	35 kg
Mounting diameter	∅ 30...115 mm pipe
Materials	Aluminium Glassfiber radome Glass reinforced PE
Options	-

Aerial Oy

Box 22
04401 Järvenpää
Finland

Tel. +358 9 2790 120
Fax +358 9 2910 210

http://www.aerial.fi
aerial@aerial.fi

DIRECTIONAL FM ANTENNA AV1528-95

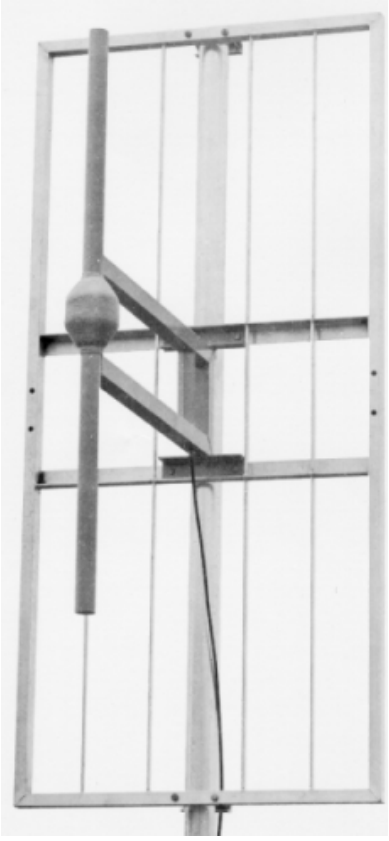

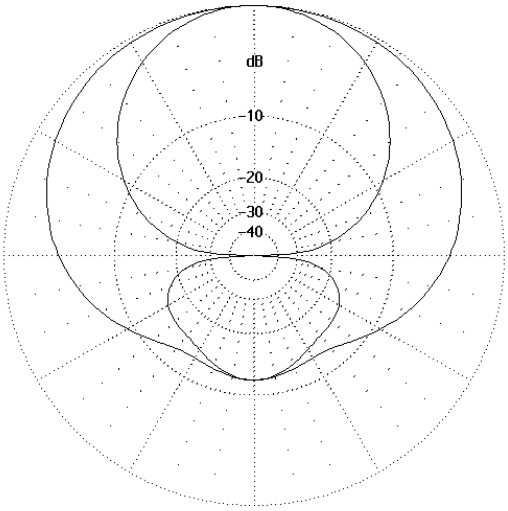

Type	AV1528-95
Frequency	88..108 MHz
Bandwidth	20 MHz
Impedance	50 Ω DC grounded
VSWR	1,5 max
Polarisation	Vertical
Gain	6 dBi
E-plane 3 dB beamwidth	70°
H-plane 3 dB beamwidth	160°
Electrical downtilt	None
Front to back ratio	12 dB
Max. Continuous power	0,5 or 2 kW
RF-connector	N or 7/16 female
Operational windspeed	40 m/s (default)
Survival windspeed	55 m/s (default)
Wind area	0,5 m²
Dimensions (H x W x D)	1900 x 1200 x 940 mm
Weight	20 kg
Mounting diameter	∅ 30...115 mm pipe
Materials	Aluminium Glassfiber radome Glass reinforced PE
Options	-

Aerial Oy
Box 22
04401 Järvenpää
Finland
Tel. +358 9 2790 120
Fax +358 9 2910 210
http://www.aerial.fi
aerial@aerial.fi

DUAL POLARISED TRANSMITTER ANTENNA AV1540-95-St

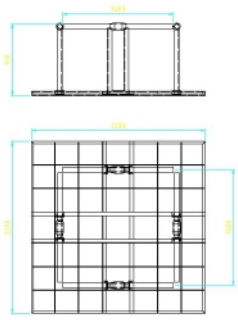

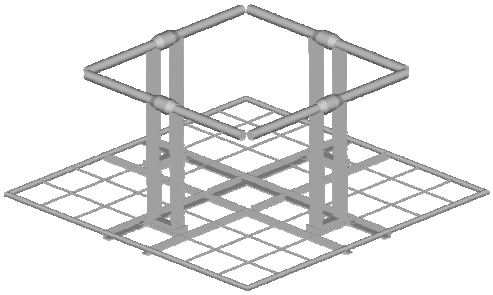

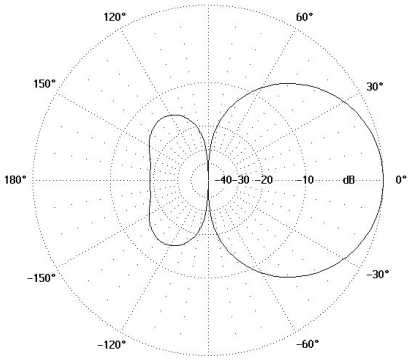

Vertical pattern of horisontal antenna.
Horisontal pattern of vertical antenna.

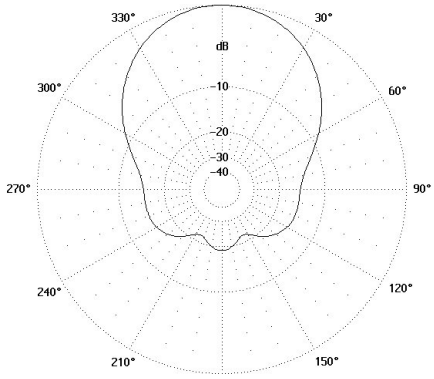

Vertical pattern of vertical antenna.
Horisontal pattern of horisontal antenna.

Type	AV1540-95-St
Frequency	88…108 MHz
Bandwidth	20 MHz
Impedance	50 Ω DC grounded
VSWR	1,3 max.
Polarisation	Horisontal and Vertical
Isolation	30 dB
Gain	8 dBi
E-plane 3 dB beamwidth	65°
H-plane 3 dB beamwidth	65°
Electrical downtilt	None
Front to back ratio	20 dB
Max. Continuous power	0,5 kW or 2 kW
RF-connector	N or 7/16 female
Operational windspeed	40 m/s (default)
Survival windspeed	55 m/s (default)
Wind area	0,7 m²
Dimensions (H x W x D) (∅ x H)	2200 x 2200 x 910 mm
Weight	90 kg
Mounting diameter	∅ 30…115 mm pipe
Materials	hot dip galvanised steel Glassfiber radome Glass reinforced PE
Options	Aluminium version.

Aerial Oy
Box 22
04401 Järvenpää
Finland
Tel. +358 9 2790 120
Fax +358 9 2910 210
http://www.aerial.fi
aerial@aerial.fi

FM TRANSMITTER ANTENNA AV1541

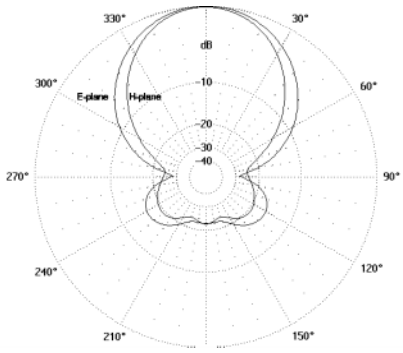

Type	AV1541
Frequency	88...108 MHz
Bandwidth	20 MHz
Impedance	50 Ω DC grounded
VSWR	1,3 max
Polarisation	Horisontal orvertical
Gain	9 dBi
E-plane 3 dB beamwidth	70°
H-plane 3 dB beamwidth	60°
Electrical downtilt	None
Front to back ratio	20 dB
Max. Continuous power	2kW
RF-connector	7/16 female or 7/8'' EIA
Operational windspeed	40 m/s (default)
Survival windspeed	55 m/s (default)
Wind area	0,7 m²
Dimensions (H x W x D) (∅ x H)	1900 x 2500 x 950 mm
Weight	110 kg
Mounting diameter	∅ 60...115 mm pipe
Materials	Hot dip galvanised steel Glassfiber radome Glass reinforced PE
Options	Available as stacked arrays. Also available as lighter Al-version.

Aerial Oy

Box 22
04401 Järvenpää
Finland

Tel. +358 9 2790 120
Fax +358 9 2910 210

http://www.aerial.fi
aerial@aerial.fi

FM TRANSMITTER ANTENNA AV1542

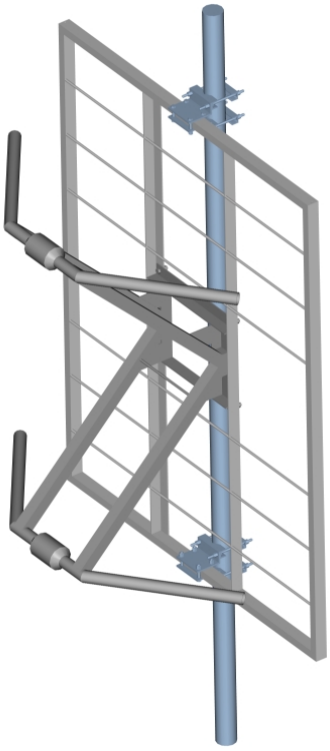

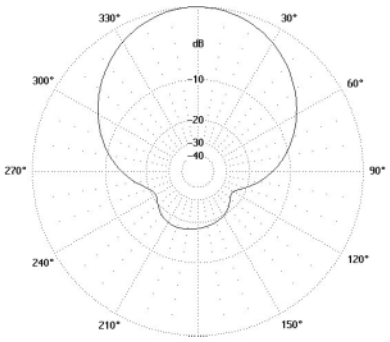

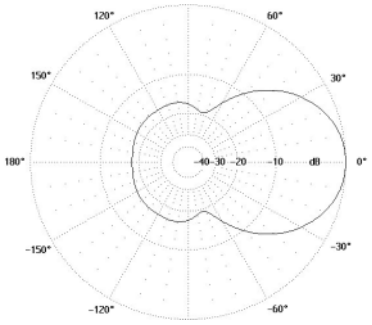

Type	AV1542
Frequency	88…108 MHz
Bandwidth	20 MHz
Impedance	50 Ω DC grounded
VSWR	1,3 max
Polarisation	Horisontal or vertical
Gain	8…9 dBi
E-plane 3 dB beamwidth	70°
H-plane 3 dB beamwidth	60°
Electrical downtilt	None
Front to back ratio	20 dB
Max. Continuous power	2 kW or 6 kW
RF-connector	7/16 female or 7/8'' EIA
Operational windspeed	40 m/s (default)
Survival windspeed	55 m/s (default)
Wind area	0,7 m²
Dimensions (H x W x D) (∅ x H)	1900 x 2500 x 950 mm
Weight	110 kg
Mounting diameter	∅ 30…115 mm pipe
Materials	Hot dip galvanised steel Glassfiber radome Glass reinforced PE
Options	Available as stacked arrays Also available lighter Al-version

Aerial Oy
Box 22
04401 Järvenpää
Finland
Tel. +358 9 2790 120
Fax +358 9 2910 210
http://www.aerial.fi
aerial@aerial.fi

FM TRANSMITTER ANTENNA AV1550

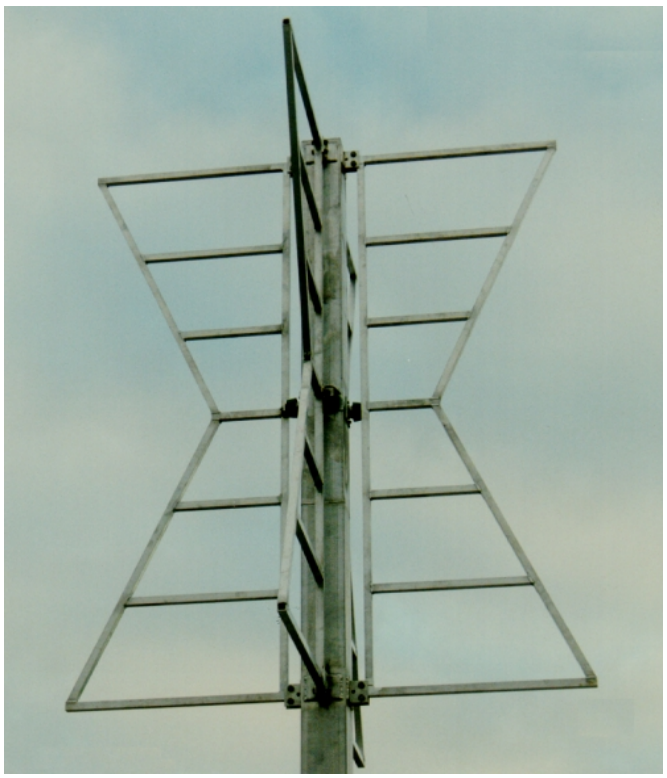

Type	AV1550
Frequency	88...108 MHz
Bandwidth	20 MHz
Impedance	50 Ω DC grounded
VSWR	1,3 max
Polarisation	Horisontal
Gain	2 dBi
E-plane 3 dB beamwidth	360°
H-plane 3 dB beamwidth	50°
Electrical downtilt	None
Front to back ratio	- dB
Max. Continuous power	2 kW
RF-connector	7/16 female or 7/8'' EIA
Operational windspeed	40 m/s (default)
Survival windspeed	55 m/s (default)
Wind area	0,6 m²
Dimensions (H x W x D)	2000 x 1700 x 1700 mm
Weight	40 kg
Mounting diameter	∅ 60...115 mm pipe
Materials	Aluminium Glassfiber radome Glass reinforced PE
Options	Available as stacked arrays

Aerial Oy

Box 22
04401 Järvenpää
Finland

Tel. +358 9 2790 120
Fax +358 9 2910 210

http://www.aerial.fi
aerial@aerial.fi

TV TRANSMITTER ANTENNA AV1551

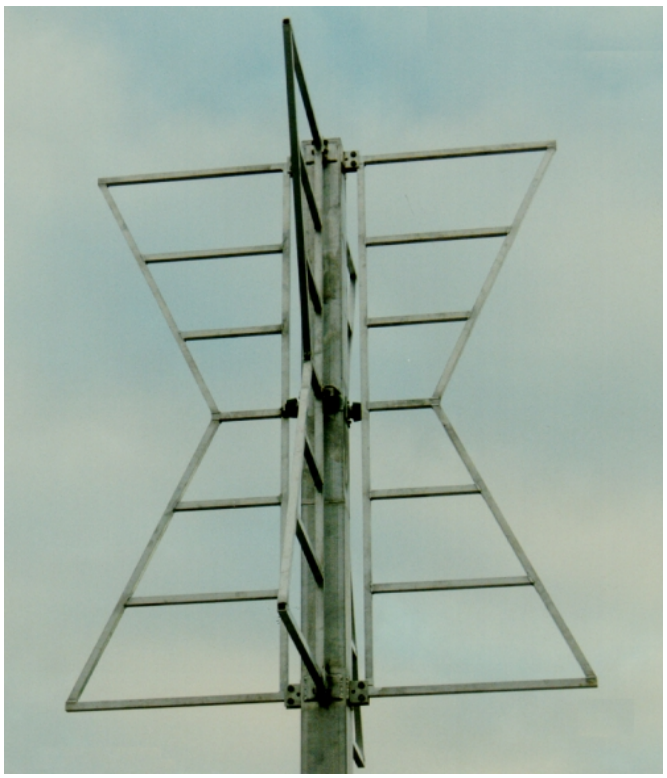

Type	AV1551
Frequency	175...230 MHz
Bandwidth	55 MHz
Impedance	50 Ω DC grounded
VSWR	1,3 max
Polarisation	Horisontal
Gain	2 dBi
E-plane 3 dB beamwidth	360°
H-plane 3 dB beamwidth	50°
Electrical downtilt	None/Available in arrays
Front to back ratio	- dB
Max. Continuous power	1 kW
RF-connector	7/16 female or 7/8'' EIA
Operational windspeed	40 m/s (default)
Survival windspeed	55 m/s (default)
Wind area	0,2 m²
Dimensions (H x W x D)	975 x 850 x 850 mm
Weight	15 kg
Mounting diameter	∅ 60...115 mm pipe
Materials	Aluminium
Options	Available as stacked arrays

Aerial Oy
Box 22
04401 Järvenpää
Finland
Tel. +358 9 2790 120
Fax +358 9 2910 210
http://www.aerial.fi
aerial@aerial.fi

FM TRANSMITTER ANTENNA AV1556

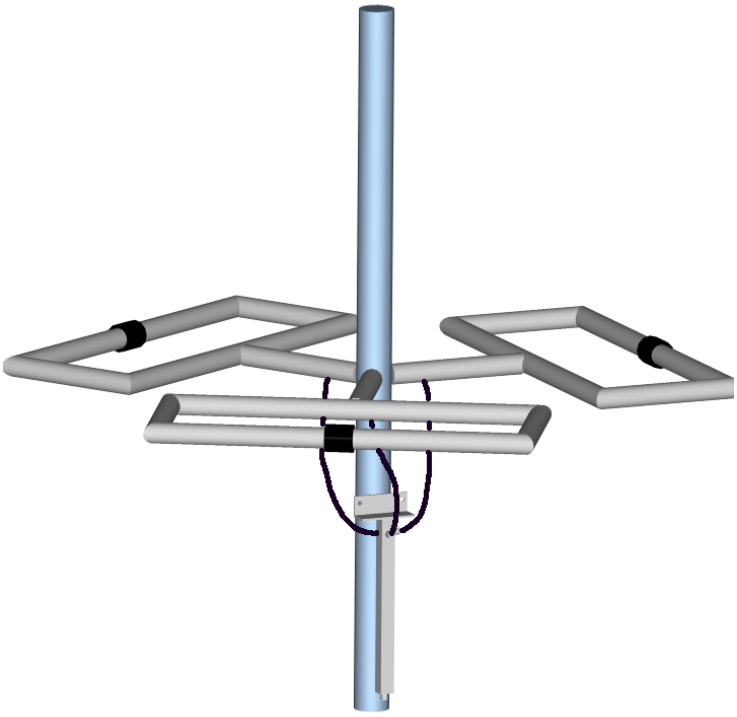

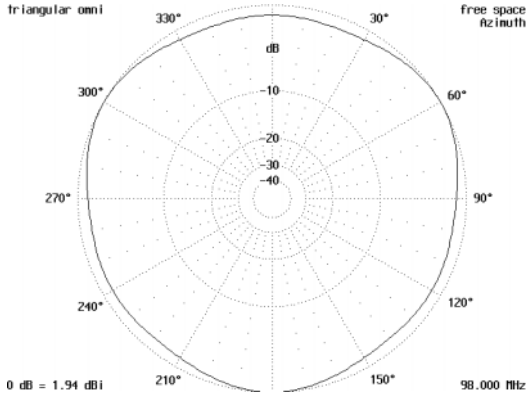

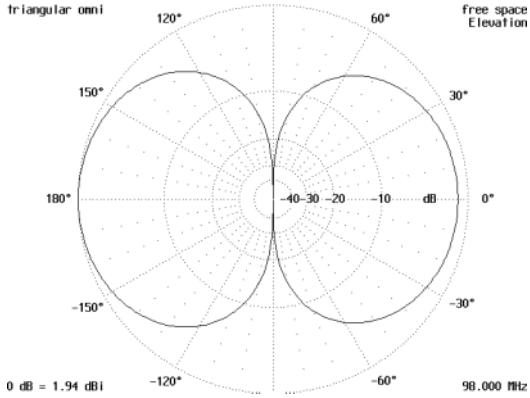

Type	AV1556
Frequency	88...108 MHz
Bandwidth	20 MHz
Impedance	50 Ω DC grounded
VSWR	1,5 max
Polarisation	Horisontal
Gain	0...2 dbi
E-plane 3 dB beamwidth	360°
H-plane 3 dB beamwidth	90°
Electrical downtilt	None
Front to back ratio	- dB
Max. Continuous power	2 kW
RF-connector	7/16 female or 7/8'' EIA
Operational windspeed	40 m/s (default)
Survival windspeed	55 m/s (default)
Wind area	0,5 m²
Dimensions (H x W x D)	1100 x 850 x 60 mm
Weight	15 kg
Mounting diameter	∅ 60...115 mm pipe
Materials	Aluminium Glassfiber radome Glass reinforced PE
Options	Available as stacked arrays

Aerial Oy
Box 22
04401 Järvenpää
Finland
Tel. +358 9 2790 120
Fax +358 9 2910 210
http://www.aerial.fi
aerial@aerial.fi

AV1557 SUPERTURNSTILE

Type	AV1557 SUPERTURNSTILE
Frequency	470…860 MHz
Bandwidth	390 MHz
Impedance	50 Ω DC grounded
VSWR	1,2 max
Polarisation	Horisontal
Gain	5,5...6,5 dBi
E-plane 3 dB beamwidth	360°
H-plane 3 dB beamwidth	25°
Electrical downtilt	None
Front to back ratio	-
Max. Continuous power	1 kW
RF-connector	7/16 female
Operational windspeed	40 m/s (default)
Survival windspeed	55 m/s (default)
Wind area	0,4 m²
Dimensions (H x W x D) (∅ x H)	300 x 1400 mm
Weight	38 kg
Mounting diameter	Flange at the bottom of the antenna
Materials	Stainless steel Glassfiber radome
Options	Mounting flange dimensions Colour

Aerial Oy
Box 22
04401 Järvenpää
Finland
Tel. +358 9 2790 120
Fax +358 9 2910 210
http://www.aerial.fi
aerial@aerial.fi

UHF-TRANSMITTER ANTENNAS AV1604-H AND AV1604-V

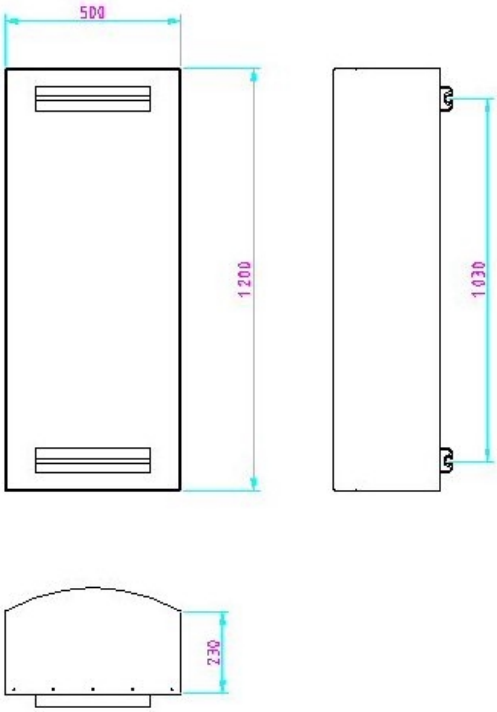

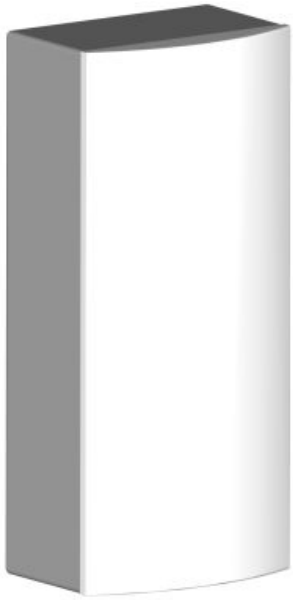

Type	AV1604-H	AV1604-V
Frequency	470...860 MHz	470...860 MHz
Bandwidth	390 MHz	390 MHz
Impedance	50 Ω DC grounded	50 Ω DC grounded
VSWR	1,2	1,2
Polarisation	Horizontal	Vertical
Gain	12 dBi	12 dBi
E-plane 3 dB beamwidth	65º @ 665 MHZ	25º @ 665 MHZ
H-plane 3 dB beamwidth	25º @ 665 MHZ	65º @ 665 MHZ
Electrical downtilt	-	-
Front to back ratio	20 dB	20 dB
Max. Continuous power	0,5 kW (7/16) or 2 kW (EIA7/8”)	0,5 kW (7/16) or 2 kW (EIA7/8”)
RF-connector	7/16 female or 7/8” EIA	7/16 female or 7/8” EIA
Operational windspeed	40 m/s (default)	40 m/s (default)
Survival windspeed	55 m/s (default)	55 m/s (default)
Wind area	0,6 m²	0,6 m²
Dimensions (H x W x D)	1200 x 500 x 230 mm	1200 x 500 x 230 mm
Weight	12 kg	12 kg
Mounting	30…115 mm pipe	30…115 mm pipe
Materials	Aluminium Glassfiber	Aluminium Glassfiber
Options	-	-

Aerial Oy
Box 22
04401 Järvenpää
Finland
Tel. +358 9 2790 120
Fax +358 9 2910 210
http://www.aerial.fi
aerial@aerial.fi

FM TRANSMITTER ANTENNA AV1705-95

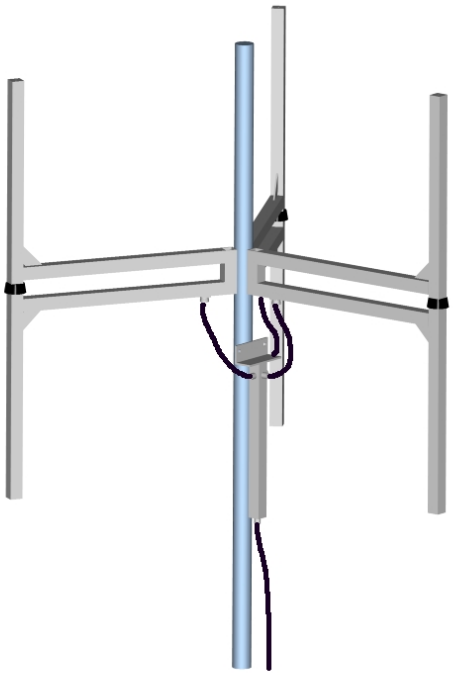

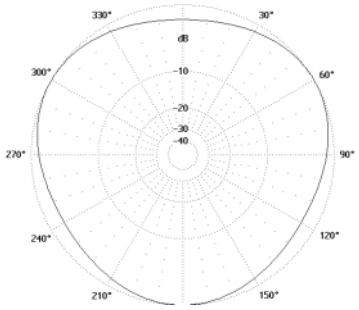

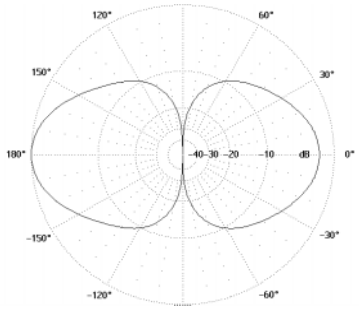

Type	AV1705-95
Frequency	88...108 MHz
Bandwidth	20 MHz
Impedance	50 Ω DC grounded
VSWR	1,3 max
Polarisation	Vertical
Gain	2 dBi
E-plane 3 dB beamwidth	50°
H-plane 3 dB beamwidth	360°
Electrical downtilt	None
Front to back ratio	- dB
Max. Continuous power	2 kW
RF-connector	7/16 female or 7/8'' EIA
Operational windspeed	40 m/s (default)
Survival windspeed	55 m/s (default)
Wind area	0,6 m²
Dimensions (H x W x D) (∅ x H)	1500 x 700 x 700 mm
Weight	14 kg
Mounting diameter	∅ 60...115 mm pipe
Materials	Aluminium Glass reinforced PE
Options	-

Aerial Oy

Box 22
04401 Järvenpää
Finland

Tel. +358 9 2790 120
Fax +358 9 2910 210

http://www.aerial.fi
aerial@aerial.fi

MARINE GROUND PLANE ANTENNA AV1463-M-390

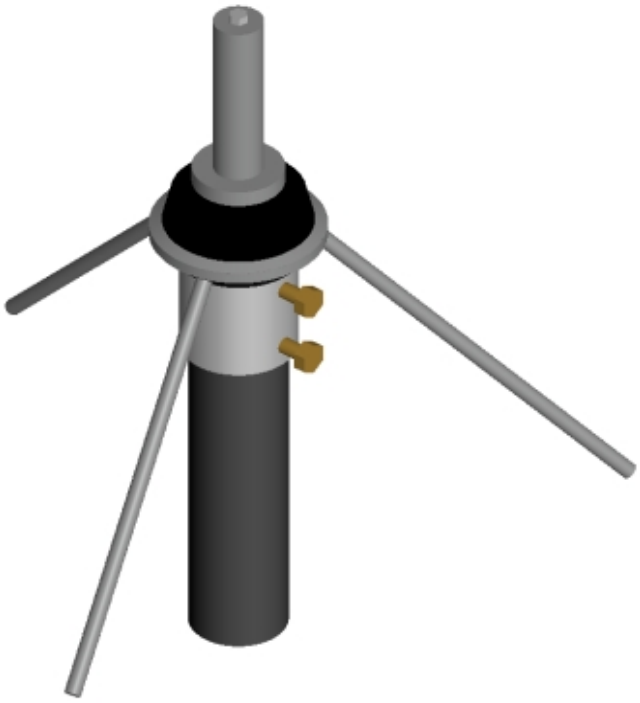

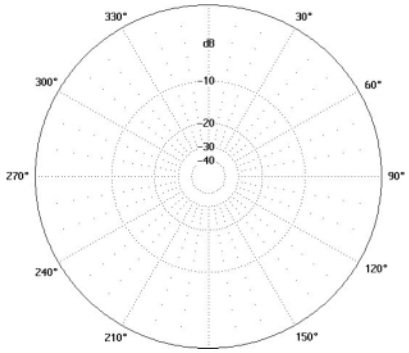

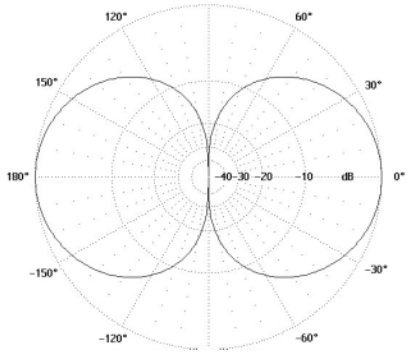

Type	AV1463-M-390
Frequency	380…400 MHz
Bandwidth	20 MHz
Impedance	50 Ω DC grounded
VSWR	1,5 typical
Polarisation	Vertical
Gain	0 dBi
E-plane 3 dB beamwidth	70°
H-plane 3 dB beamwidth	360°
Electrical downtilt	None
Front to back ratio	- dB
Max. Continuous power	0,5 kW
RF-connector	N or 7/16 female
Operational windspeed	40 m/s (default)
Survival windspeed	55 m/s (default)
Wind area	0,02 m²
Dimensions (H x W x D)	345 x 340 x 340 mm (assembled) Delivered with ground plane elements detached.
Weight	0,5 kg
Mounting diameter	∅ 30…60 mm pipe
Materials	Aluminium A4-steel Glass reinforced polycarbonate/PE Polyurethane
Options	Other frequency ranges available.

Aerial Oy
Box 22
04401 Järvenpää
Finland
Tel. +358 9 2790 120
Fax +358 9 2910 210
http://www.aerial.fi
aerial@aerial.fi

OMNIDIRECTIONAL ANTENNA AV1947

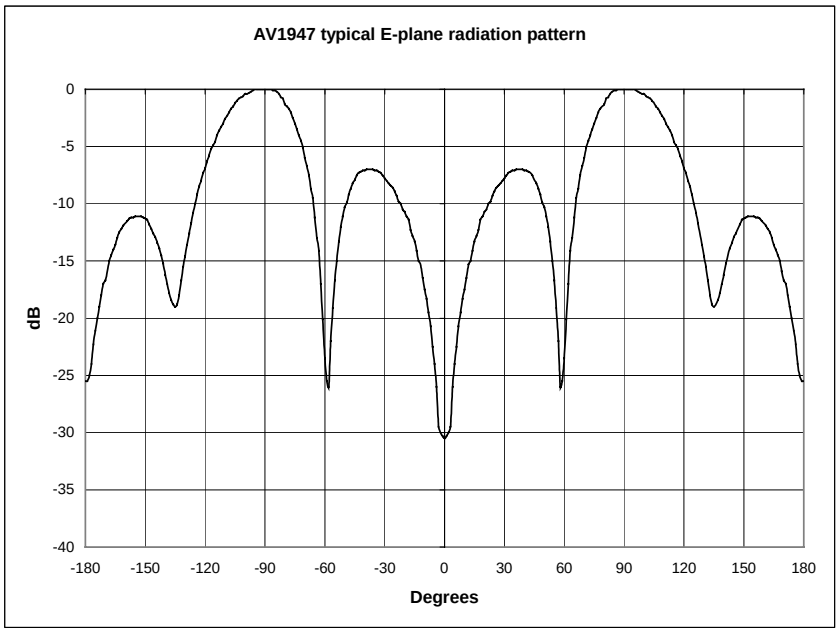

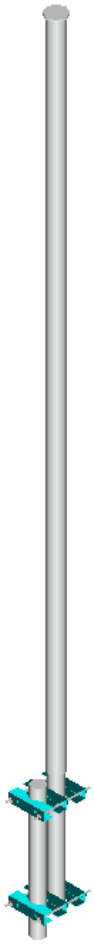

Type	AV1947
Frequency	380...400 MHz
Bandwidth	20 MHz
Impedance	50 Ω DC grounded
VSWR	1,5 max
Polarisation	Vertical
Gain	5 dBi
E-plane 3 dB beamwidth	31°
H-plane 3 dB beamwidth	-°
Electrical downtilt	None
Front to back ratio	- dB
Max. Continuous power	0,5 kW
RF-connector	N or 7/16 female
Operational windspeed	40 m/s (default)
Survival windspeed	55 m/s (default)
Wind area	0,15 m²
Dimensions (H x W x D) (∅ x H)	1830 x 66 mm
Weight	10 kg
Mounting diameter	∅ 60 mm pipe
Materials	Aluminium Glassfiber radome Glass reinforced polycarbonate/PE
Options	-

Aerial Oy

Box 22
04401 Järvenpää
Finland

Tel. +358 9 2790 120
Fax +358 9 2910 210

http://www.aerial.fi
aerial@aerial.fi

INDOOR ANTENNA AV4110

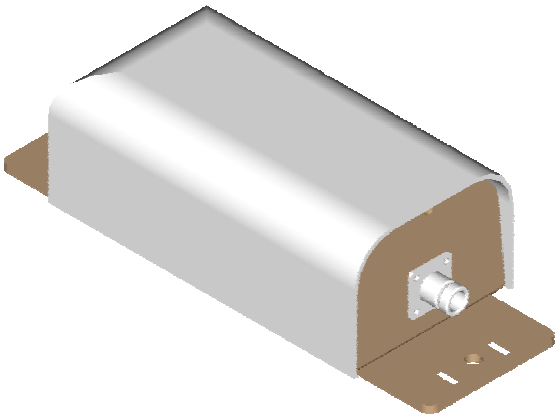

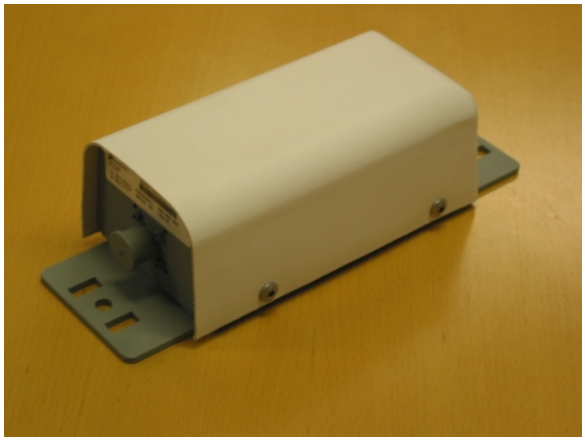

Type	AV4110
Frequency	380…430 MHz
Bandwidth	50 MHz
Impedance	50 Ω, DC grounded
VSWR	2,0 typical, depending on mounting environment.
Polarisation	Horisontal or Vertical
Gain	0 dBi
E-plane 3 dB beamwidth	120°/depending on mounting
H-plane 3 dB beamwidth	120°/depending on mounting
Electrical downtilt	None
Front to back ratio	10 dB/depending on mounting
Max. Continuous power	0,5 kW
RF-connector	N female
Operational windspeed	40 m/s (default)
Survival windspeed	55 m/s (default)
Wind area	0,025 m²
Dimensions (H x W x D) (∅ x H)	265 x 100 x 70 mm
Weight	0,5 kg
Mounting diameter	∅ 30…115 mm pipe
Materials	Aluminium Glassfiber radome Glass reinforced PE
Options	-

Aerial Oy

Box 22
04401 Järvenpää
Finland

Tel. +358 9 2790 120
Fax +358 9 2910 210

http://www.aerial.fi
aerial@aerial.fi

DIRECTIONAL ANTENNA AV4121

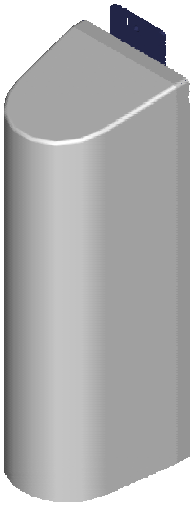

Type	AV4121
Frequency	380…430 MHz
Bandwidth	50 MHz
Impedance	50 Ω DC grounded
VSWR	1,5 max
Polarisation	Vertical
Gain	6 dBi
E-plane 3 dB beamwidth	60°
H-plane 3 dB beamwidth	170°
Electrical downtilt	None
Front to back ratio	15 dB
Max. Continuous power	0,5 kW
RF-connector	N or 7/16 female
Operational windspeed	40 m/s (default)
Survival windspeed	55 m/s (default)
Wind area	0,6 m²
Dimensions (H x W x D) (∅ x H)	500 x 160 x 180 mm
Weight	1 kg
Mounting diameter	∅ 30…115 mm pipe
Materials	Aluminium Glassfiber radome Glass reinforced polycarbonate/PE
Options	-

Aerial Oy
Box 22
04401 Järvenpää
Finland
Tel. +358 9 2790 120
Fax +358 9 2910 210
http://www.aerial.fi
aerial@aerial.fi

DIRECTIONAL ANTENNA AV4122

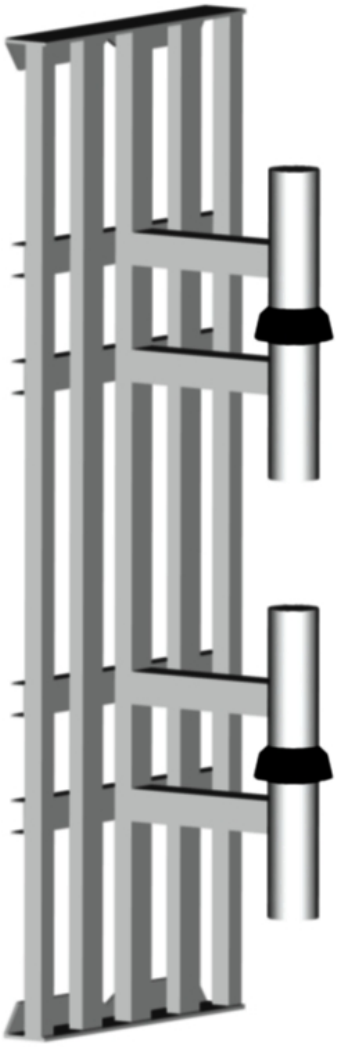

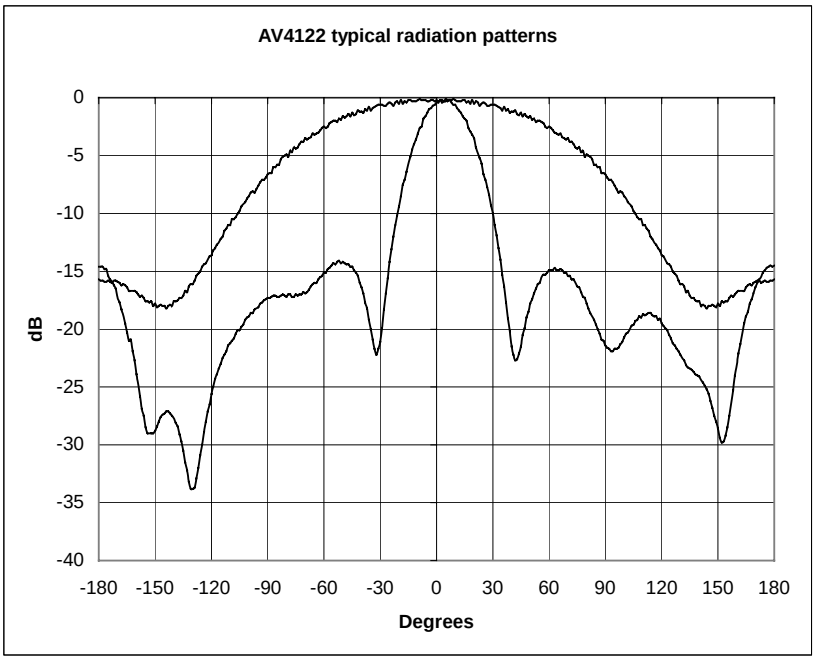

Type	AV4122
Frequency	380...400 MHz
Bandwidth	20 MHz
Impedance	50 Ω DC grounded
VSWR	1,3 max
Polarisation	Vertical
Gain	8,5 dBi
E-plane 3 dB beamwidth	31°
H-plane 3 dB beamwidth	137°
Electrical downtilt	None
Front to back ratio	15 dB
Max. Continuous power	0,5 kW
RF-connector	N or 7/16 female
Operational windspeed	40 m/s (default)
Survival windspeed	55 m/s (default)
Wind area	0,45 m²
Dimensions (H x W x D) (∅ x H)	1195 x 400 x260 mm
Weight	7,5 kg
Mounting diameter	∅ 30...115 mm pipe
Materials	Aluminium Glass reinforced polycarbonate PE
Options	-

Aerial Oy

Box 22
04401 Järvenpää
Finland

Tel. +358 9 2790 120
Fax +358 9 2910 210

http://www.aerial.fi
aerial@aerial.fi

DIRECTIONAL ANTENNA AV4123

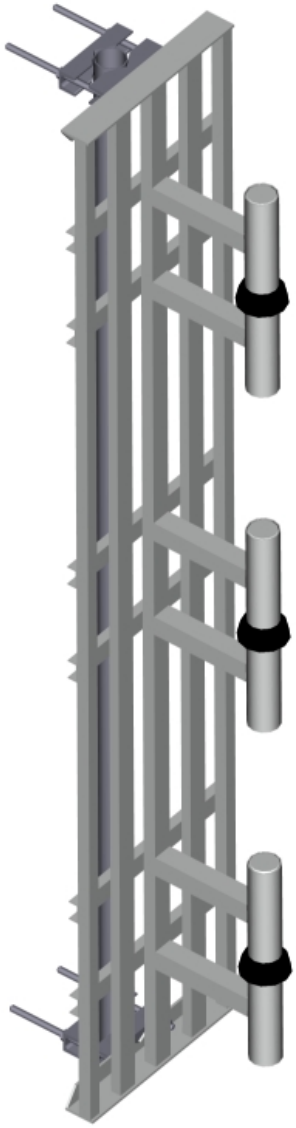

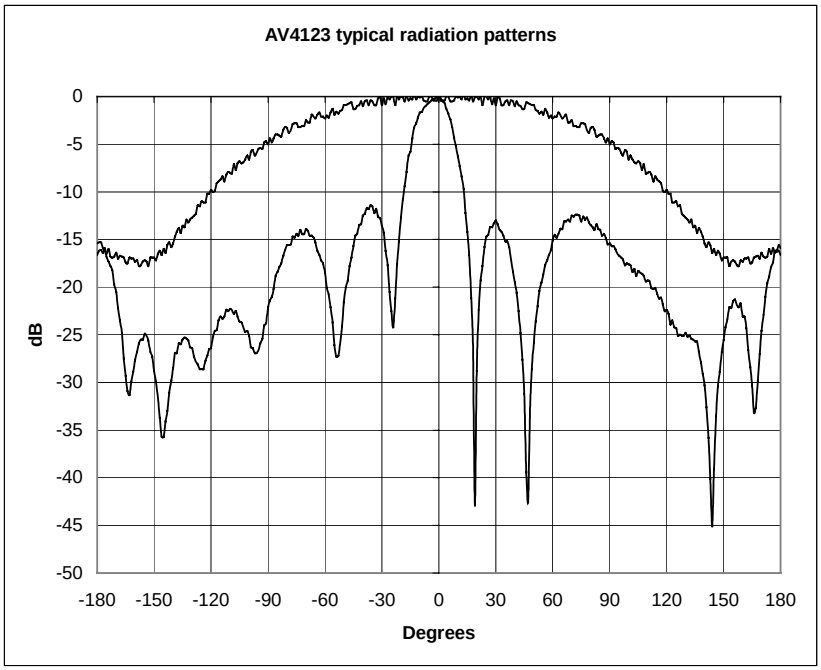

Type	AV4123
Frequency	380...400 MHz
Bandwidth	20 MHz
Impedance	50 Ω DC grounded
VSWR	1,3 max
Polarisation	Vertical
Gain	11,5 dBi
E-plane 3 dB beamwidth	19°
H-plane 3 dB beamwidth	137°
Electrical downtilt	None
Front to back ratio	15 dB
Max. Continuous power	0,5 kW
RF-connector	N or 7/16 female
Operational windspeed	40 m/s (default)
Survival windspeed	55 m/s (default)
Wind area	0,7 m²
Dimensions (H x W x D) (∅ x H)	2195 x 400 x260 mm
Weight	11,5 kg
Mounting diameter	∅ 30...115 mm pipe
Materials	Aluminium Glass reinforced polycarbonate/PE
Options	-

Aerial Oy
Box 22
04401 Järvenpää
Finland
Tel. +358 9 2790 120
Fax +358 9 2910 210
http://www.aerial.fi
aerial@aerial.fi

DIRECTIONAL ANTENNA AV4124

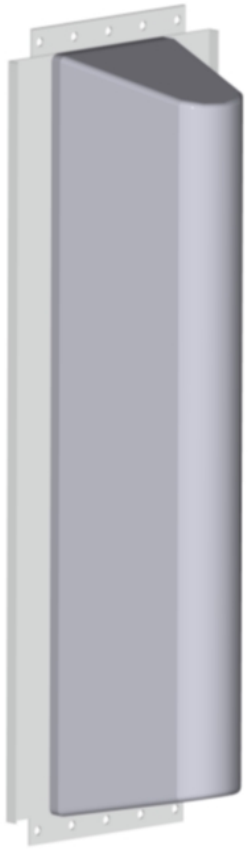

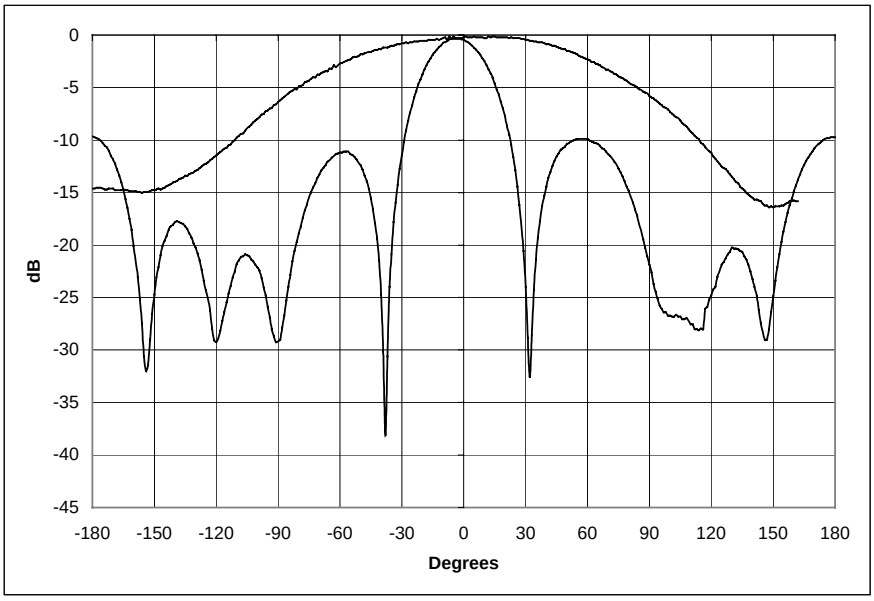

Type	AV4124
Frequency	380...430 MHz
Bandwidth	50 MHz
Impedance	50 Ω DC grounded
VSWR	1,3 max
Polarisation	Vertical
Gain	9,3 dBi
E-plane 3 dB beamwidth	33°
H-plane 3 dB beamwidth	132°
Electrical downtilt	None
Front to back ratio	15 dB
Max. Continuous power	0,5 kW
RF-connector	N or 7/16 female
Operational windspeed	40 m/s (default)
Survival windspeed	55 m/s (default)
Wind area	0,7 m²
Dimensions (H x W x D) (∅ x H)	1100 x 380 x 250 mm
Weight	7,0 kg
Mounting diameter	∅ 30...115 mm pipe
Materials	Aluminium Glassfiber radome Glass reinforced polycarbonate/PE
Options	-

Aerial Oy

Box 22
04401 Järvenpää
Finland

Tel. +358 9 2790 120
Fax +358 9 2910 210

http://www.aerial.fi
aerial@aerial.fi

DIRECTIONAL ANTENNA AV4125

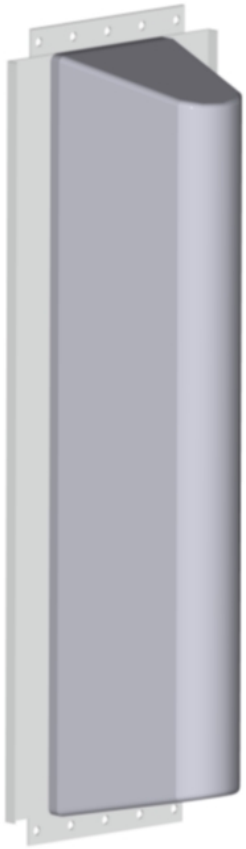

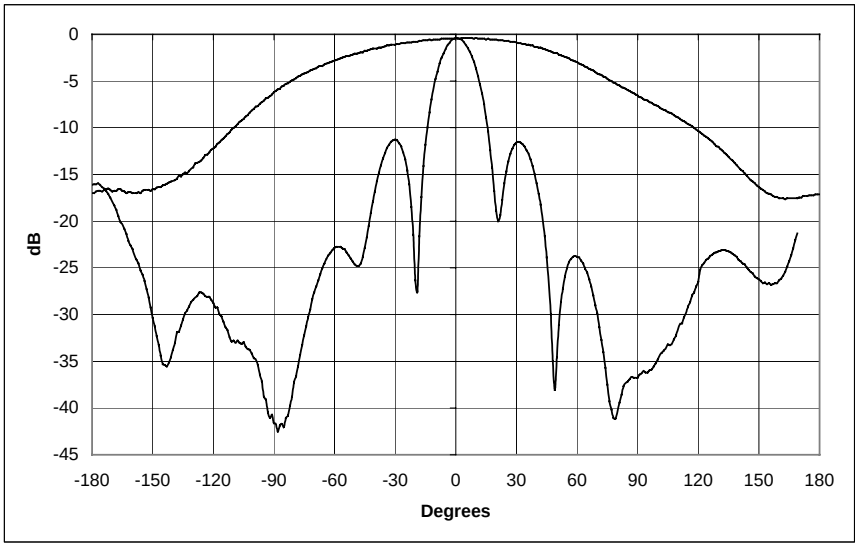

Type	AV4125
Frequency	380...430 MHz
Bandwidth	50 MHz
Impedance	50 Ω DC grounded
VSWR	1,3 max
Polarisation	Vertical
Gain	12,5 dBi
E-plane 3 dB beamwidth	17°
H-plane 3 dB beamwidth	132°
Electrical downtilt	None
Front to back ratio	15 dB
Max. Continuous power	0,5 kW
RF-connector	N or 7/16 female
Operational windspeed	40 m/s (default)
Survival windspeed	55 m/s (default)
Wind area	1,2 m²
Dimensions (H x W x D) (∅ x H)	2100 x 380 x 250 mm
Weight	14,0 kg
Mounting diameter	∅ 30...115 mm pipe
Materials	Aluminium Glassfiber radome Glass reinforced polycarbonate/PE
Options	-

Aerial Oy

Box 22
04401 Järvenpää
Finland

Tel. +358 9 2790 120
Fax +358 9 2910 210

http://www.aerial.fi
aerial@aerial.fi

SIDE MOUNTED DIPOLE ANTENNA AV1314

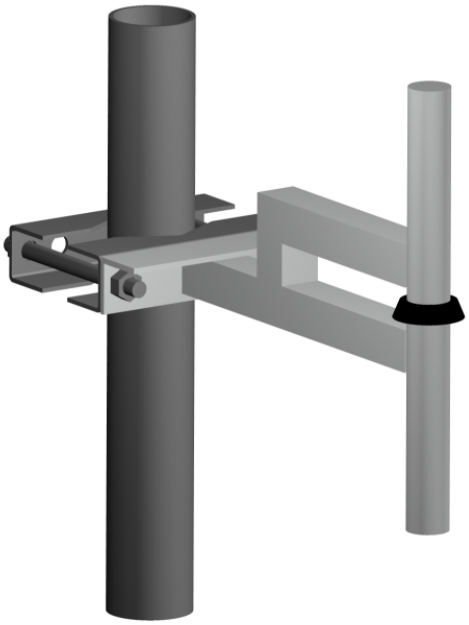

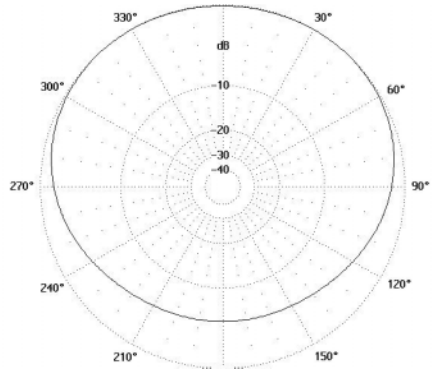

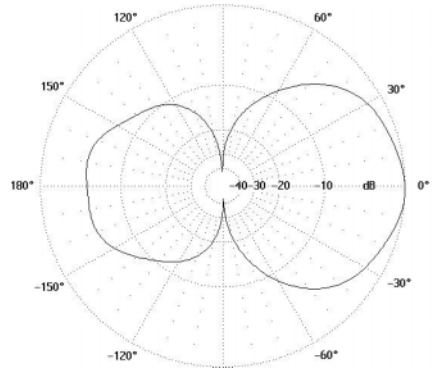

Type	AV1314
Frequency	380…470 MHz (AV1314-H) 340…440 MHz (AV1314-L) 300…350 MHz (AV1314-A) 280...320 MHz (AV1314-300)
Bandwidth	90 MHz (AV1314-H) 100 MHz (AV1314-L) 50 MHz (AV1314-A) 40 MHz (AV1314-300)
Impedance	50 Ω DC grounded
VSWR	1,5 max
Polarisation	Vertical
Gain	4 dBi
E-plane 3 dB beamwidth	60°
H-plane 3 dB beamwidth	200°/depending on mounting
Electrical downtilt	None
Front to back ratio	6 dB/depending on mounting
Max. Continuous power	0,5 kW
RF-connector	N or 7/16 female
Operational windspeed	40 m/s (default)
Survival windspeed	55 m/s (default)
Wind area	0,04 m²
Dimensions (H x W x D) (∅ x H)	300 x 160 x 300 mm
Weight	1,3 kg
Mounting diameter	∅ 30…115 mm pipe
Materials	Aluminium Glass reinforced polycarbonate/PE
Options	-

Aerial Oy
Box 22
04401 Järvenpää
Finland
Tel. +358 9 2790 120
Fax +358 9 2910 210
http://www.aerial.fi
aerial@aerial.fi

OMNIDIRECTIONAL ANTENNA AV1427

AV1427 is available both with a wall bracket (on right) or a ceiling bracket (on left).

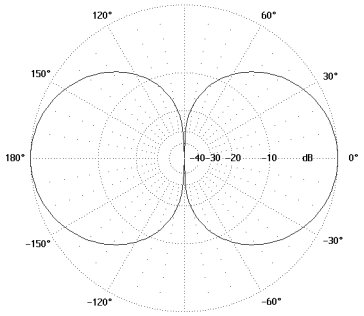

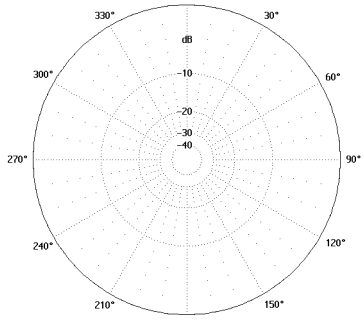

Type	AV1427
Frequencies	380...400 MHz (AV1427-390) 400...430 MHz (AV1427-415) 450...470 MHz (AV1427-460)
Bandwidth	20 MHz (AV1427-390) 30 MHz (AV1427-405) 20 MHz (AV1427-460)
Impedance	50 Ω
VSWR	1,5 typical
Polarisation	Vertical
Gain	2,2 dBi
E-plane 3 dB beamwidth	70°
H-plane 3 dB beamwidth	-
Electrical downtilt	None
Front to back ratio	-
Max. Continuous power	0,5 kW
RF-connector	N or TNC female
Operational windspeed	40 m/s (default)
Survival windspeed	55 m/s (default)
Wind area	0,01 m²
Dimensions (H x W x D) (∅ x H)	400 x 30 x 30 mm
Weight	0,6 kg
Mounting	1) On horizontal plane or ceiling upside down. 2) On top of the mounting pipe ∅ max. 40 mm. 3) Adjacent to the mounting pipe∅ max. 40 mm. 4) On the wall. NOTE: The materials around the antenna and mounting environment in general may change the radiation and VSWR characteristics!
Materials	Aluminium Glassfiber radome Glass reinforced PE
Options	-

Aerial Oy
Box 22
04401 Järvenpää
Finland
Tel. +358 9 2790 120
Fax +358 9 2910 210
http://www.aerial.fi
aerial@aerial.fi

GROUND PLANE ANTENNA AV1463

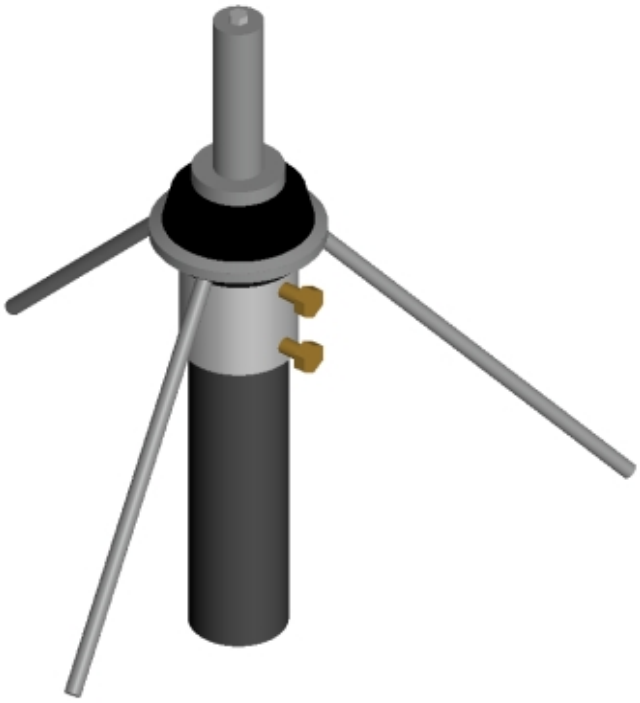

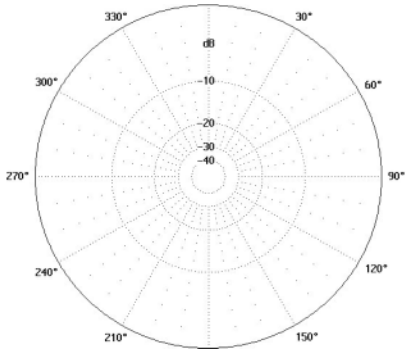

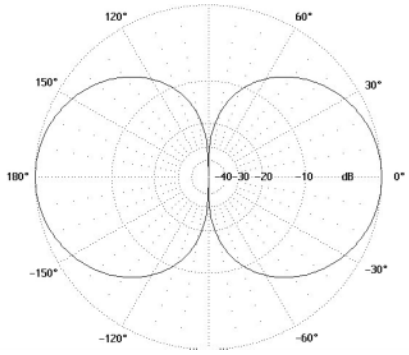

Type	AV1463
Frequency	310…470 MHz
Bandwidth	160 MHz
Impedance	50 Ω DC grounded
VSWR	1,5 typical
Polarisation	Vertical
Gain	0 dBi
E-plane 3 dB beamwidth	70°
H-plane 3 dB beamwidth	360°
Electrical downtilt	None
Front to back ratio	- dB
Max. Continuous power	0,5 kW
RF-connector	N or 7/16 female
Operational windspeed	40 m/s (default)
Survival windspeed	55 m/s (default)
Wind area	0,02 m²
Dimensions (H x W x D)	345 x 340 x 340 mm (assembled) Delivered with ground plane elements detached
Weight	0,5 kg
Mounting diameter	∅ 30…60 mm pipe
Materials	Aluminium Glass reinforced polycarbonate/PE
Options	-

Aerial Oy
Box 22
04401 Järvenpää
Finland
Tel. +358 9 2790 120
Fax +358 9 2910 210
http://www.aerial.fi
aerial@aerial.fi

YAGI ANTENNA AV1464

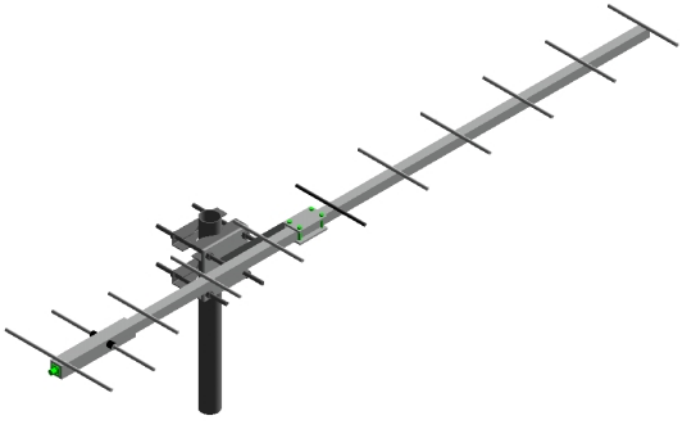

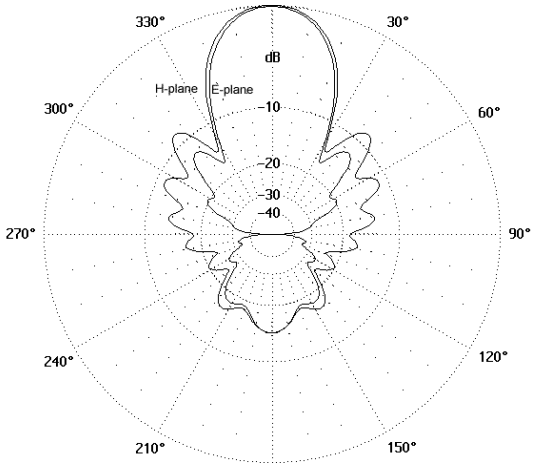

Type	AV1464
Frequency	370...390 MHz (AV1464-380) 380...420 MHz (AV1464-400) 415...440 MHz (AV1464-425) 440...470 MHz (AV1464-455)
Bandwidth	20 MHz (AV1464-380) 40 MHz (AV1464-400) 35 MHz (AV1464-425) 30 MHz (AV1464-455)
Impedance	50 Ω DC grounded
VSWR	1,5 max
Polarisation	Horisontal or Vertical
Gain	14 dBi
E-plane 3 dB beamwidth	30°
H-plane 3 dB beamwidth	35°
Electrical downtilt	None
Front to back ratio	15 dB
Max. Continuous power	0,5 kW
RF-connector	N or 7/16 female
Operational windspeed	40 m/s (default)
Survival windspeed	55 m/s (default)
Wind area	0,15 m²
Dimensions (H x W x D) (∅ x H)	2115 x 380 x 50 mm
Weight	4 kg
Mounting diameter	∅ 30...115 mm pipe
Materials	Aluminium Glass reinforced polycarbonate/PE
Options	-

Aerial Oy
Box 22
04401 Järvenpää
Finland
Tel. +358 9 2790 120
Fax +358 9 2910 210
http://www.aerial.fi
aerial@aerial.fi

YAGI ANTENNA AV1467

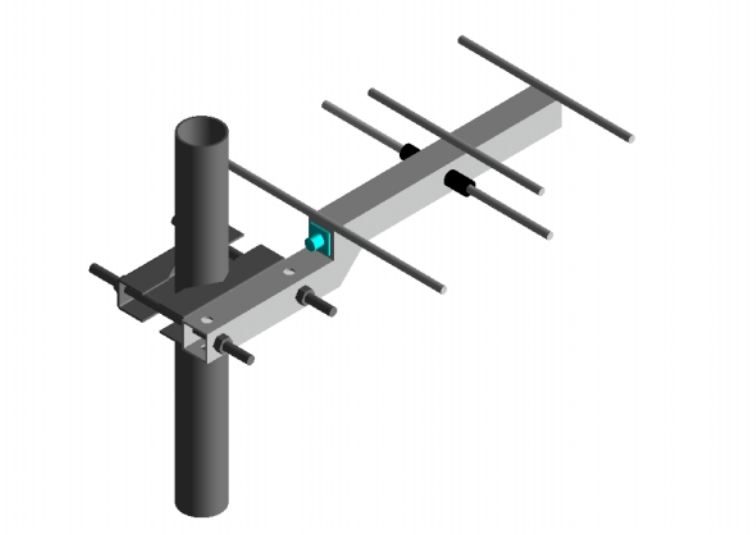

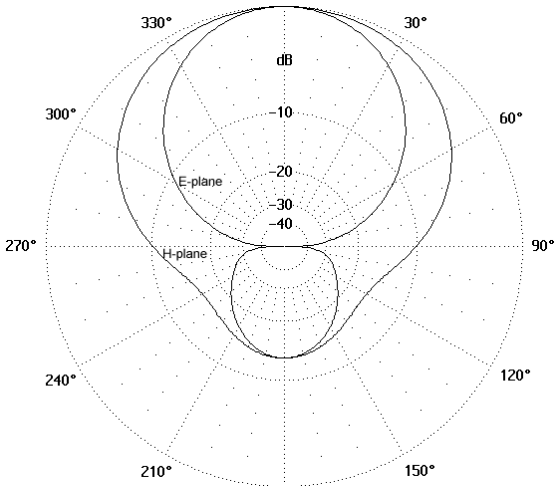

Type	AV1467
Frequency	370...400 MHz (AV1467-385) 400...440 MHz (AV1467-420) 440...480 MHz (AV1467-460)
Bandwidth	30 MHz (AV1467-385) 40 MHz (AV1467-420) 40 MHz (AV1467-460)
Impedance	50 Ω DC grounded
VSWR	1,5 max
Polarisation	Horisontal or Vertical
Gain	6 dBi
E-plane 3 dB beamwidth	60°
H-plane 3 dB beamwidth	110°
Electrical downtilt	None
Front to back ratio	13 dB
Max. Continuous power	0,5 kW
RF-connector	N or 7/16 female
Operational windspeed	40 m/s (default)
Survival windspeed	55 m/s (default)
Wind area	0,05 m²
Dimensions (H x W x D) (∅ x H)	574 x 380 x 90 mm
Weight	1,5 kg
Mounting diameter	∅ 30...115 mm pipe
Materials	Aluminium Glass reinforced polycarbonate/PE
Options	-

Aerial Oy
Box 22
04401 Järvenpää
Finland
Tel. +358 9 2790 120
Fax +358 9 2910 210
http://www.aerial.fi
aerial@aerial.fi

YAGI ANTENNA AV1468

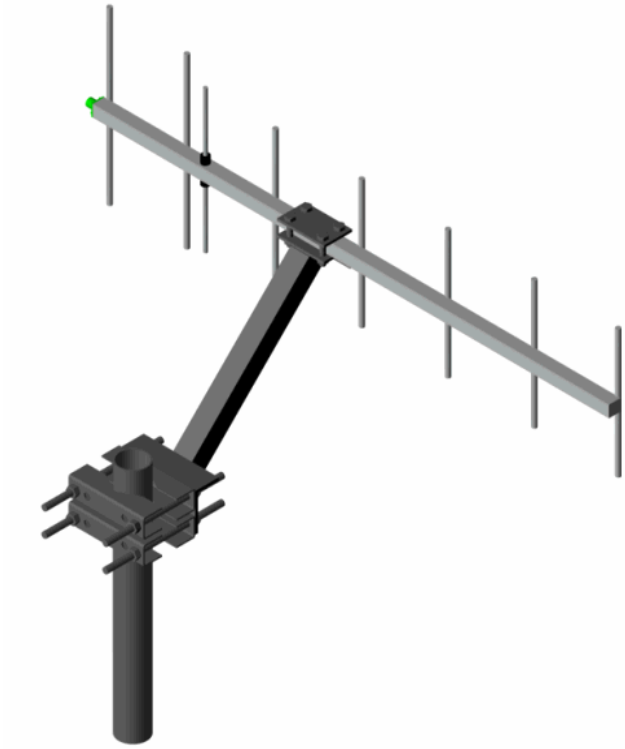

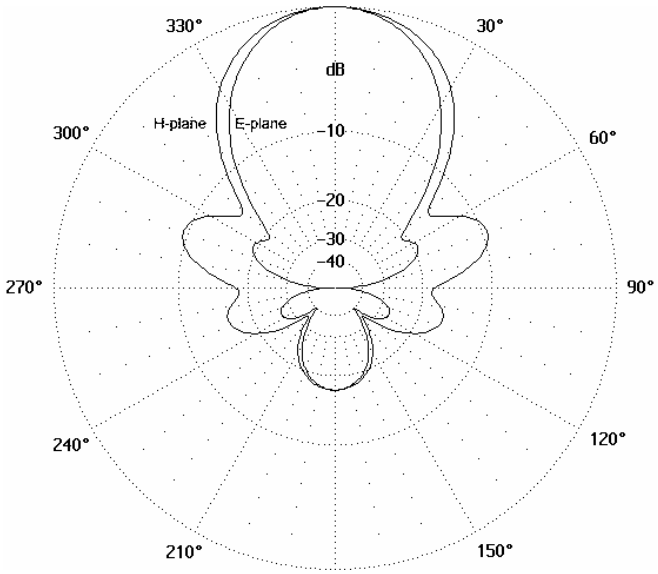

Type	AV1468
Frequency	AV1468-390 : 380...400 MHz AV1468-420 : 400…440 MHz AV1468-460 : 440...480 MHz
Bandwidth	AV1468-390 : 20 MHz AV1468-420 : 40 MHz AV1468-460 : 40 MHz
Impedance	50 Ω DC grounded
VSWR	1,5 max
Polarisation	Horisontal or Vertical
Gain	10 dBi
E-plane 3 dB beamwidth	45°
H-plane 3 dB beamwidth	56°
Electrical downtilt	None
Front to back ratio	15 dB
Max. Continuous power	0,5 kW
RF-connector	N or 7/16 female
Operational windspeed	40 m/s (default)
Survival windspeed	55 m/s (default)
Wind area	0,1 m²
Dimensions (H x W x D) (∅ x H)	1105 x 362 x 52 mm (AV1468-420)
Weight	1,3 kg (AV1468-420)
Mounting diameter	∅ 30...115 mm pipe
Materials	Aluminium Glass reinforced polycarbonate/PE
Options	-

Aerial Oy
Box 22
04401 Järvenpää
Finland
Tel. +358 9 2790 120
Fax +358 9 2910 210
http://www.aerial.fi
aerial@aerial.fi

BIDIRECTIONAL ANTENNA AV1484

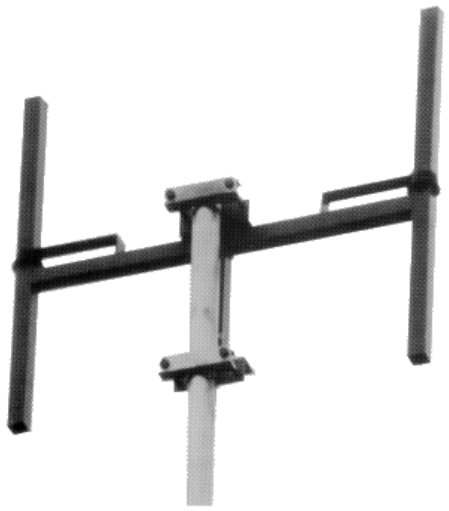

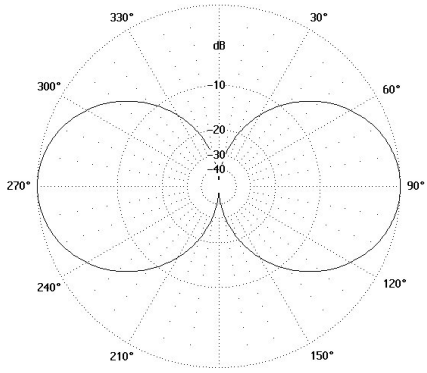

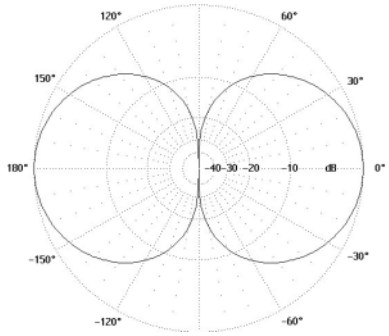

Type	AV1484
Frequency	365...435 MHz
Bandwidth	70 MHz
Impedance	50 Ω DC grounded
VSWR	1,5 max
Polarisation	Vertical
Gain	5 dBi
E-plane 3 dB beamwidth	60°
H-plane 3 dB beamwidth	50°
Electrical downtilt	None
Front to back ratio	- dB
Max. Continuous power	0,5 kW
RF-connector	N or 7/16 female
Operational windspeed	40 m/s (default)
Survival windspeed	55 m/s (default)
Wind area	0,1 m²
Dimensions (H x W x D) (∅ x H)	380 x 400 x 100 mm
Weight	2,5 kg
Mounting diameter	∅ 30...115 mm pipe
Materials	Aluminium Glass reinforced polycarbonate/PE
Options	Special frequency ranges available on request

Aerial Oy

Box 22
04401 Järvenpää
Finland

Tel. +358 9 2790 120
Fax +358 9 2910 210

http://www.aerial.fi
aerial@aerial.fi

DIRECTIONAL ANTENNA AV1524

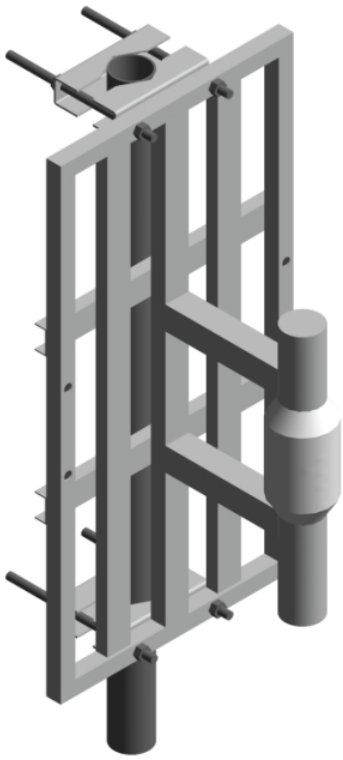

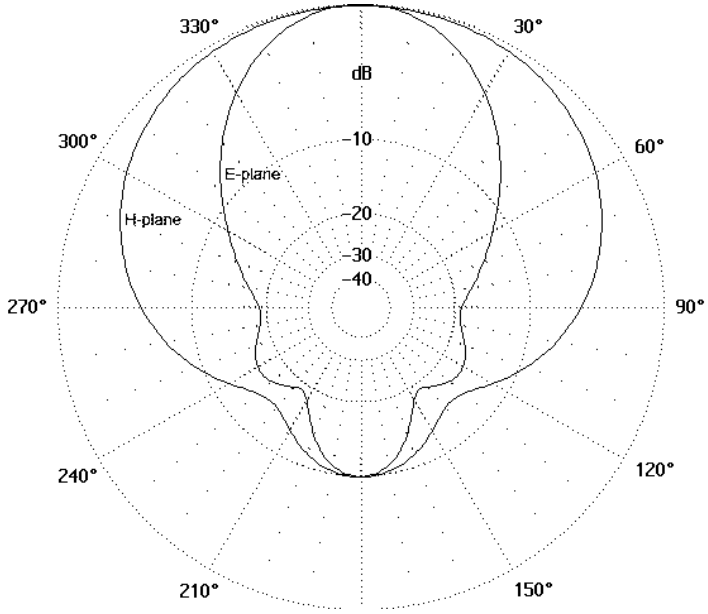

Type	AV1524
Frequency	350...470 MHz (AV1524-425) 290...440 MHz (AV1524-300)
Bandwidth	120 MHz (AV1524-425) 150 MHz (AV1524-300)
Impedance	50 Ω DC grounded
VSWR	1,5 max
Polarisation	Horisontal or Vertical
Gain	7 dBi
E-plane 3 dB beamwidth	60°
H-plane 3 dB beamwidth	120°
Electrical downtilt	None
Front to back ratio	15 dB
Max. Continuous power	0,5 kW
RF-connector	N or 7/16 female
Operational windspeed	40 m/s (default)
Survival windspeed	55 m/s (default)
Wind area	0,28 m²
Dimensions (H x W x D) (∅ x H)	800 x 400 x 300 mm
Weight	4,0 kg
Mounting diameter	∅ 30...115 mm pipe
Materials	Aluminium Glassfiber radome Glass reinforced polycarbonate/PE
Options	Special frequency ranges available on request.

Aerial Oy
Box 22
04401 Järvenpää
Finland
Tel. +358 9 2790 120
Fax +358 9 2910 210
http://www.aerial.fi
aerial@aerial.fi

DIRECTIONAL ANTENNA AV1524-2

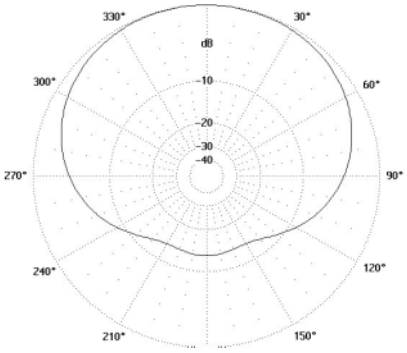

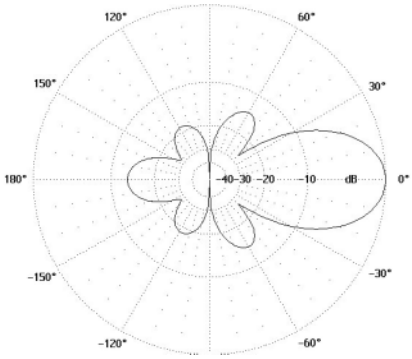

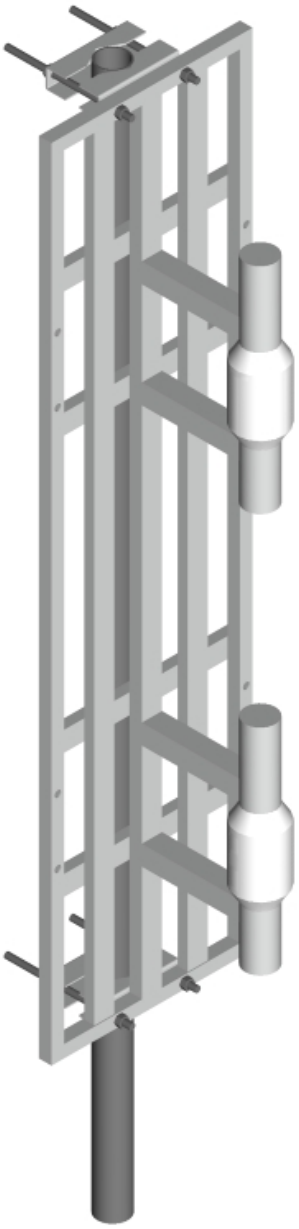

Type	AV1524-2
Frequency	350...470 MHz 290...440 MHz (AV1524-2-300)
Bandwidth	120 MHz 150 MHz
Impedance	50 Ω DC grounded
VSWR	1,5 max
Polarisation	Horisontal or Vertical
Gain	10 dBi
E-plane 3 dB beamwidth	30°
H-plane 3 dB beamwidth	120°
Electrical downtilt	None
Front to back ratio	15 dB
Max. Continuous power	0,5 kW
RF-connector	N or 7/16 female
Operational windspeed	40 m/s (default)
Survival windspeed	55 m/s (default)
Wind area	0,45 m²
Dimensions (H x W x D) (∅ x H)	1600 x 400 x 300 mm
Weight	8,0 kg
Mounting diameter	∅ 30...115 mm pipe
Materials	Aluminium Glassfiber radome Glass reinforced polycarbonate/PE
Options	Special frequency ranges available on request

Aerial Oy

Box 22
04401 Järvenpää
Finland

Tel. +358 9 2790 120
Fax +358 9 2910 210

http://www.aerial.fi
aerial@aerial.fi

DIRECTIONAL ANTENNA AV1525

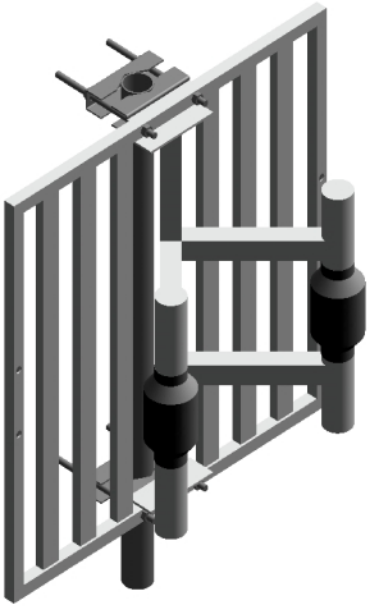

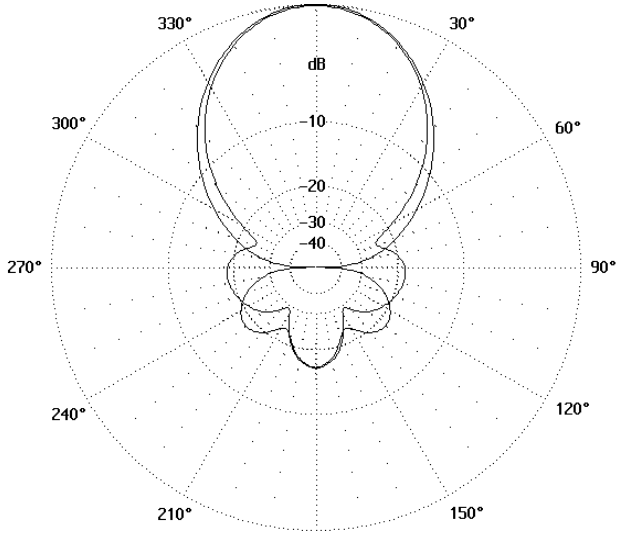

Type	AV1525
Frequency	330...470 MHz (AV1525) 225...400 MHz (AV1525-300)
Bandwidth	140 MHz (AV1525) 175 MHz (AV1525-300)
Impedance	50 Ω DC grounded
VSWR	1,5 max
Polarisation	Horisontal or Vertical
Gain	9,5 dBi
E-plane 3 dB beamwidth	47°
H-plane 3 dB beamwidth	50°
Electrical downtilt	None
Front to back ratio	20 dB
Max. Continuous power	0,5 kW
RF-connector	N or 7/16 female
Operational windspeed	40 m/s (default)
Survival windspeed	55 m/s (default)
Wind area	0,45 m²
Dimensions (H x W x D) (∅ x H)	800 x 800 x 300 mm
Weight	8,0 kg
Mounting diameter	∅ 30...115 mm pipe
Materials	Aluminium Glassfiber radome Glass reinforced polycarbonate PE
Options	-

Aerial Oy
Box 22
04401 Järvenpää
Finland
Tel. +358 9 2790 120
Fax +358 9 2910 210
http://www.aerial.fi
aerial@aerial.fi

INDOOR PANEL ANTENNA AV1568

Type	AV1568
Frequencies	380...430 MHz (AV1568-405) 400...500 MHz (AV1568-450)
Bandwidth	50 MHz (AV1568-405) 100 MHz (AV1568-450)
Impedance	50 Ω DC grounded
VSWR	1,5 typical, 2,5 max.
Polarisation	Horizontal (wall mounted) or Vertical (ceiling mounted)
Gain	2 dBi, depends on mounting surface
E-plane 3 dB beamwidth	80°, depends on the mounting surface
H-plane 3 dB beamwidth	-
Electrical downtilt	None
Front to back ratio	-
Max. Continuous power	0,5 kW
RF-connector	N or TNC female
Operational windspeed	40 m/s (default)
Survival windspeed	55 m/s (default)
Wind area	0,02 m²
Dimensions (H x W x D) (∅ x H)	200 x 100 mm
Weight	0,5 kg
Mounting diameter	On wall/ceiling mounting
Materials	Aluminium Glassfiber radome Glass reinforced PE
Options	Colour Different versions on 380...500 MHz frequency range.

Aerial Oy

Box 22
04401 Järvenpää
Finland

Tel. +358 9 2790 120
Fax +358 9 2910 210

http://www.aerial.fi
aerial@aerial.fi

HIGH GAIN ANTENNA AV1914

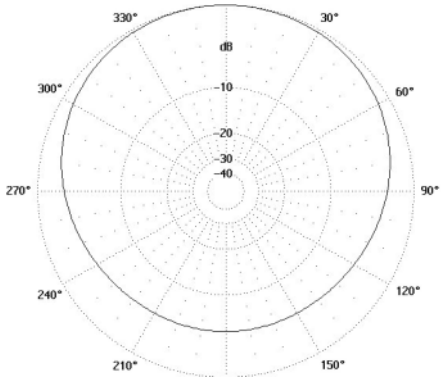

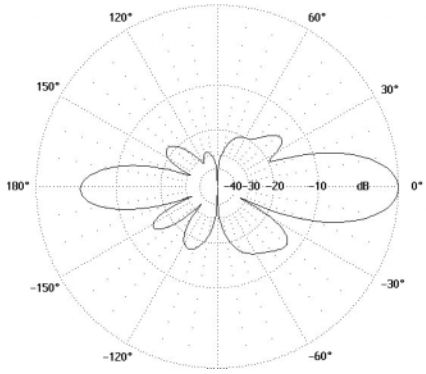

Type	AV1914
Frequency	350...470 MHz (AV1914-H) 300...350 MHz (AV1914-A) 280...320 MHz (AV1914-300)
Bandwidth	120 MHz (AV1914-H) 50 MHz (AV1914-A) 40 MHz (AV1914-300)
Impedance	50 Ω DC grounded
VSWR	1,5 max
Polarisation	Horisontal or Vertical
Gain	10 dBi
E-plane 3 dB beamwidth	14°
H-plane 3 dB beamwidth	180°/depending on mounting
Electrical downtilt	None
Front to back ratio	6 dB/depending on mounting
Max. Continuous power	0,5 kW
RF-connector	N or 7/16 female
Operational windspeed	40 m/s (default)
Survival windspeed	55 m/s (default)
Wind area	0,25 m²
Dimensions (H x W x D) (∅ x H)	3000 x 200 x 60 mm
Weight	8 kg
Mounting diameter	∅ 30...115 mm pipe
Materials	Aluminium Glass reinforced polycarbonate/PE
Options	Different dipole variations for example double unit antenna for separate Rx and Tx dipole segments. Special frequency ranges available on request.

Aerial Oy
Box 22
04401 Järvenpää
Finland
Tel. +358 9 2790 120
Fax +358 9 2910 210
http://www.aerial.fi
aerial@aerial.fi

HIGH GAIN ANTENNA 2 x AV1914

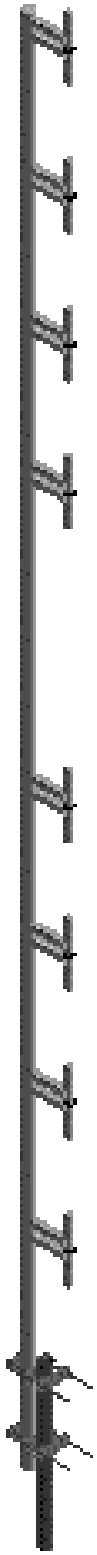

FOR RADIATION PATTERNS PLEASE SEE
SINGLE ANTENNA BROCHURES.

Type	2 x AV1914
Frequency	350...470 MHz (AV1914-H) 300...350 MHz (AV1914-A) 280...320 MHz (AV1914-300)
Bandwidth	120 MHz (AV1914-H) 50 MHz (AV1914-A) 40 MHz (AV1914-300)
Impedance	50 Ω DC grounded
VSWR	1,5 max
Polarisation	Vertical
Gain	10 dBi
E-plane 3 dB beamwidth	14°
H-plane 3 dB beamwidth	200°/depending on mounting
Electrical downtilt	None
Front to back ratio	6 dB/depending on mounting
Max. Continuous power	0,5 kW
RF-connector	N or 7/16 female
Operational windspeed	40 m/s (default)
Survival windspeed	55 m/s (default)
Wind area	0,8 m²
Dimensions (H x W x D) (∅ x H)	7300 x 200 x 60 mm
Weight	20 kg
Mounting diameter	∅ 30...115 mm pipe
Materials	Aluminium Glass reinforced polycarbonate/PE
Options	Different dipole variations. Foldable antennas for reduced transportation size. Special frequency ranges available on request.

Aerial Oy
Box 22
04401 Järvenpää
Finland
Tel. +358 9 2790 120
Fax +358 9 2910 210
http://www.aerial.fi
aerial@aerial.fi

HIGH GAIN ANTENNA AV1914-8

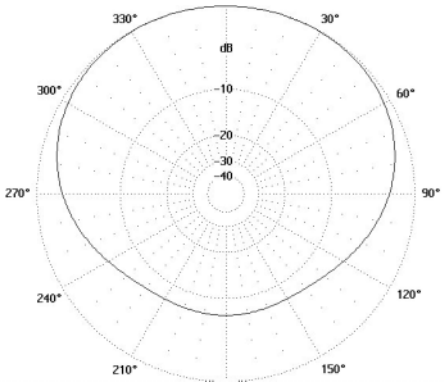

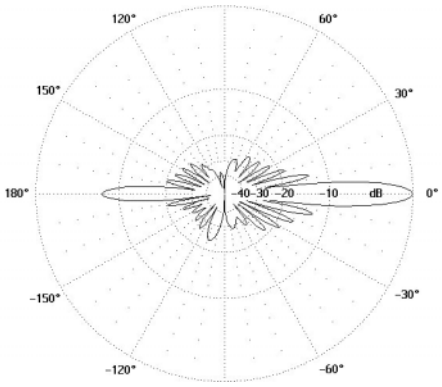

Type	AV1914-8
Frequencies	370...435 MHz (AV1914-8-L) 410...470 MHz (AV1914-8-H)
Bandwidth	65 MHz (AV1914-8-L) 60 MHz (AV1914-8-H)
Impedance	50 Ω DC grounded
VSWR	1,5 max
Polarisation	Vertical
Gain	13 dBi
E-plane 3 dB beamwidth	10°
H-plane 3 dB beamwidth	180°
Electrical downtilt	None
Front to back ratio	6 dB
Max. Continuous power	0,5 kW
RF-connector	N or 7/16 female
Operational windspeed	40 m/s (default)
Survival windspeed	55 m/s (default)
Wind area	0,50 m²
Dimensions (H x W x D) (∅ x H)	6000 x 200 x 60 mm
Weight	16 kg
Mounting diameter	∅ 30…115 mm pipe
Materials	Aluminium Glass reinforced polycarbonate/PE
Options	Special frequency ranges available on request.

Aerial Oy

Box 22
04401 Järvenpää
Finland

Tel. +358 9 2790 120
Fax +358 9 2910 210

http://www.aerial.fi
aerial@aerial.fi

HIGH GAIN ANTENNA AV1914-8-280

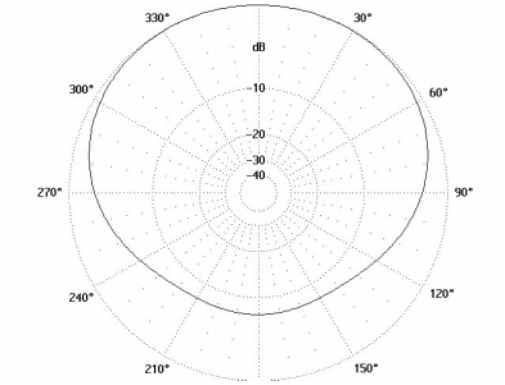

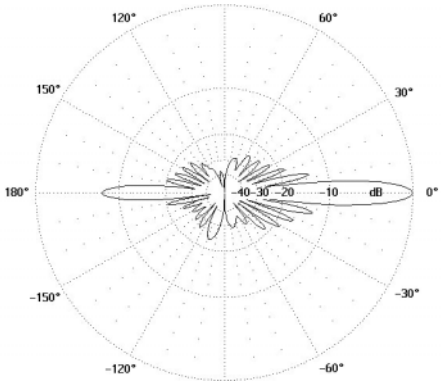

Type	AV1914-8-280
Frequency	235...330 MHz
Bandwidth	95 MHz
Impedance	50 Ω DC grounded
VSWR	1,5 max
Polarisation	Vertical
Gain	13 dBi
E-plane 3 dB beamwidth	10°
H-plane 3 dB beamwidth	180°
Electrical downtilt	None
Front to back ratio	6 dB
Max. Continuous power	0,5 kW
RF-connector	N or 7/16 female
Operational windspeed	40 m/s (default)
Survival windspeed	55 m/s (default)
Wind area	0,55 m²
Dimensions (H x W x D) (∅ x H)	6500 x 200 x 60 mm
Weight	18 kg
Mounting diameter	∅ 30...115 mm pipe
Materials	Aluminium Glass reinforced polycarbonate/PE
Options	Special frequency ranges available on request

Aerial Oy
Box 22
04401 Järvenpää
Finland
Tel. +358 9 2790 120
Fax +358 9 2910 210
http://www.aerial.fi
aerial@aerial.fi

DOUBLE UNIT ANTENNA AV1914-8/1915

FOR RADIATION PATTERNS PLEASE SEE
SINGLE ANTENNA BROCHURES.

Type	AV1914-8/1915
Frequency	See AV1914-8 and AV1915 brochures
Bandwidth	See AV1914-8 and AV1915 brochures
Impedance	50 Ω DC grounded
VSWR	1,5 max
Polarisation	Vertical
Gain	13/7 dBi
E-plane 3 dB beamwidth	10°/30°
H-plane 3 dB beamwidth	180°/depending on mounting
Electrical downtilt	None
Front to back ratio	6 dB/depending on mounting
Max. Continuous power	0,5 kW
RF-connector	N or 7/16 female
Operational windspeed	40 m/s (default)
Survival windspeed	55 m/s (default)
Wind area	0,7 m²
Dimensions (H x W x D) (∅ x H)	7500 x 200 x 60 mm
Weight	21 kg
Mounting diameter	∅ 30...115 mm pipe
Materials	Aluminium Glass reinforced polycarbonate/PE
Options	Different versions from all available AV1914-8 and AV1915 antennas available. Special frequency ranges available on request.

Aerial Oy
Box 22
04401 Järvenpää
Finland
Tel. +358 9 2790 120
Fax +358 9 2910 210
http://www.aerial.fi
aerial@aerial.fi

MEDIUM GAIN ANTENNA AV1915

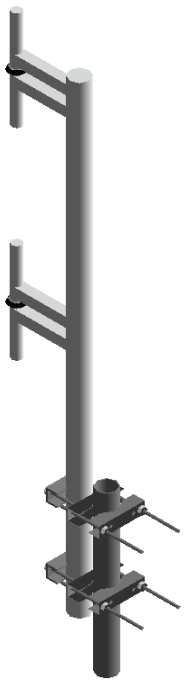

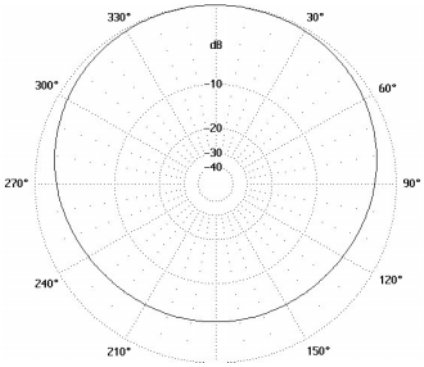

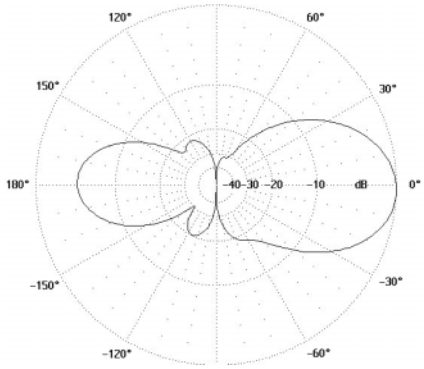

Type	AV1915
Frequency	350...470 MHz (AV1915-H) 300...350 MHz (AV1915-A) 280...320 MHz (AV1915-300)
Bandwidth	120 MHz (AV1915-H) 50 MHz (AV1915-A) 40 MHz (AV1915-300)
Impedance	50 Ω DC grounded
VSWR	1,5 max
Polarisation	Vertical
Gain	7 dBi
E-plane 3 dB beamwidth	30°
H-plane 3 dB beamwidth	180°
Electrical downtilt	None
Front to back ratio	6 dB
Max. Continuous power	0,5 kW
RF-connector	N or 7/16 female
Operational windspeed	40 m/s (default)
Survival windspeed	55 m/s (default)
Wind area	0,16 m²
Dimensions (H x W x D) (∅ x H)	1450 x 200 x 60 mm
Weight	5 kg
Mounting diameter	∅ 30...115 mm pipe
Materials	Aluminium Glass reinforced polycarbonate/PE
Options	Different dipole variations for example double unit antenna for separate Rx and Tx dipole segments. Special frequency ranges available on request.

Aerial Oy
Box 22
04401 Järvenpää
Finland
Tel. +358 9 2790 120
Fax +358 9 2910 210
http://www.aerial.fi
aerial@aerial.fi

MEDIUM GAIN ANTENNA 2 x AV1915

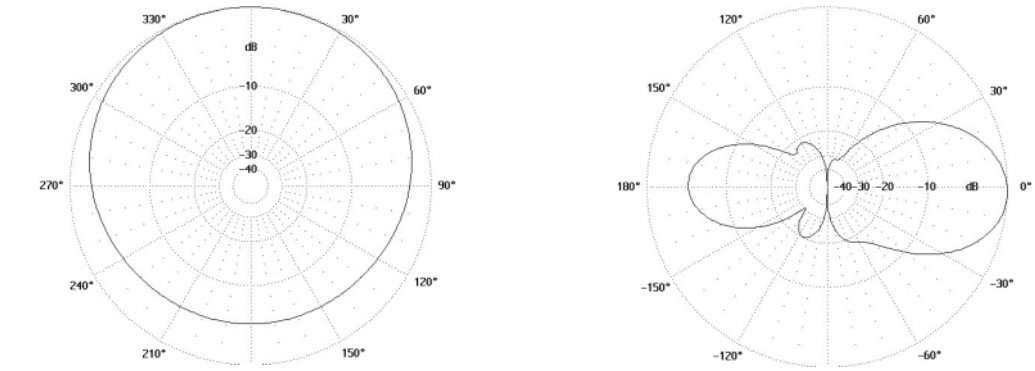

RADIATION PATTERN/UNIT

Type	2 x AV1915
Frequency	350...470 MHz (2 x AV1915-H) 300...350 MHz (2 x AV1915-A) 280...320 MHz (2 x AV1915-300)
Bandwidth	120 MHz (2 x AV1915-H) 50 MHz (2 x AV1915-A) 40 MHz (2 x AV1915-300)
Impedance	50 Ω DC grounded
VSWR	1,5 max
Polarisation	Vertical
Gain	7 dBi/unit
E-plane 3 dB beamwidth	30°
H-plane 3 dB beamwidth	180°/depending on mounting
Electrical downtilt	None
Front to back ratio	6 dB/depending on mounting
Max. Continuous power	0,5 kW
RF-connector	N or 7/16 female
Operational windspeed	40 m/s (default)
Survival windspeed	55 m/s (default)
Wind area	0,32 m²
Dimensions (H x W x D) (∅ x H)	3000 x 200 x 60 mm
Weight	10 kg
Mounting diameter	∅ 30...115 mm pipe
Materials	Aluminium Glass reinforced polycarbonate/PE
Options	Special frequency ranges available on request.

Aerial Oy
Box 22
04401 Järvenpää
Finland
Tel. +358 9 2790 120
Fax +358 9 2910 210
http://www.aerial.fi
aerial@aerial.fi

MEDIUM GAIN ANTENNA 2 x 2 x AV1915

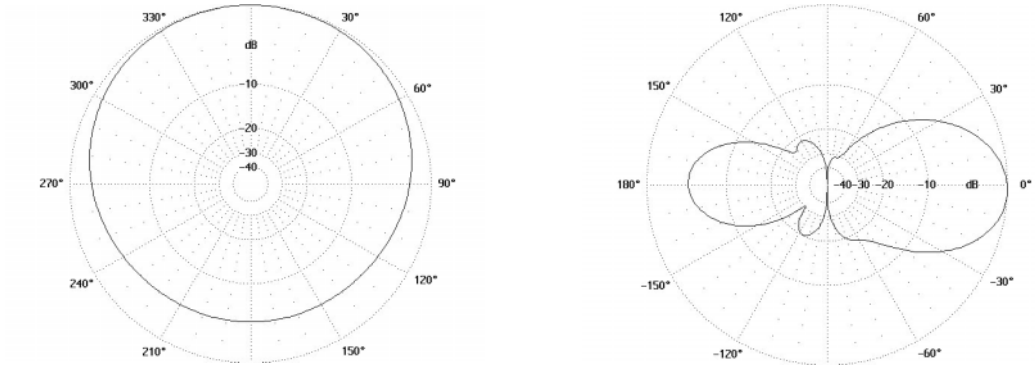

RADIATION PATTERN/UNIT

Type	2 x 2 x AV1915
Frequency	350...470 MHz (2 x 2 x AV1915-H) 300...350 MHz (2 x 2 x AV1915-A) 280...320 MHz (2 x 2 x AV1915-300)
Bandwidth	120 MHz (2 x 2 x AV1915-H) 50 MHz (2 x 2 x AV1915-A) 40 MHz (2 x 2 x AV1915-300)
Impedance	50 Ω DC grounded
VSWR	1,5 max
Polarisation	Vertical
Gain	7 dBi/unit
E-plane 3 dB beamwidth	30°
H-plane 3 dB beamwidth	180°/depending on mounting
Electrical downtilt	None
Front to back ratio	6 dB/depending on mounting
Max. Continuous power	0,5 kW
RF-connector	N or 7/16 female
Operational windspeed	40 m/s (default)
Survival windspeed	55 m/s (default)
Wind area	0,70 m²
Dimensions (H x W x D) (∅ x H)	8700 x 200 x 60 mm
Weight	25 kg
Mounting diameter	∅ 30...115 mm pipe
Materials	Aluminium Glass reinforced polycarbonate/PE
Options	Special frequency ranges available on request. Length when folded for transportation 5100 mm. The antenna is equipped with 3 quy wires between the 4th and 5th elements.

Aerial Oy
Box 22
04401 Järvenpää
Finland
Tel. +358 9 2790 120
Fax +358 9 2910 210
http://www.aerial.fi
aerial@aerial.fi

DIRECTIONAL ANTENNA AV4126

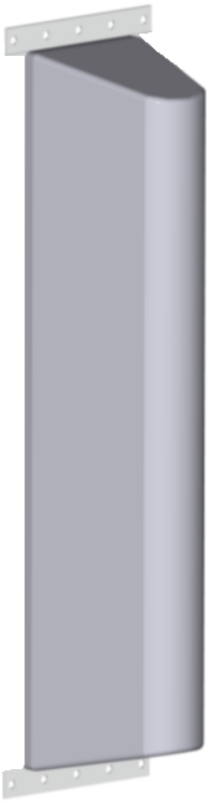

Type	AV4126
Frequencies	380...430 MHz (AV4126-405) 410...470 MHz (AV4126-440)
Bandwidth	50 MHz (AV4126-405) 60 MHz (AV4126-440)
Impedance	50 Ω DC grounded
VSWR	1,5 max
Polarisation	Horizontal
Gain	8,0 dBi
E-plane 3 dB beamwidth	33°
H-plane 3 dB beamwidth	155°
Electrical downtilt	None
Front to back ratio	15 dB
Max. Continuous power	0,5 kW
RF-connector	N or 7/16 female
Operational windspeed	40 m/s (default)
Survival windspeed	55 m/s (default)
Wind area	0,7 m²
Dimensions (H x W x D) (∅ x H)	1100 x 225 x 250 mm
Weight	7 kg
Mounting diameter	∅ 30…115 mm pipe
Materials	Aluminium Glassfiber radome Glass reinforced polycarbonate/PE
Options	-

Aerial Oy
Box 22
04401 Järvenpää
Finland
Tel. +358 9 2790 120
Fax +358 9 2910 210
http://www.aerial.fi
aerial@aerial.fi

DIRECTIONAL ANTENNA AV4127

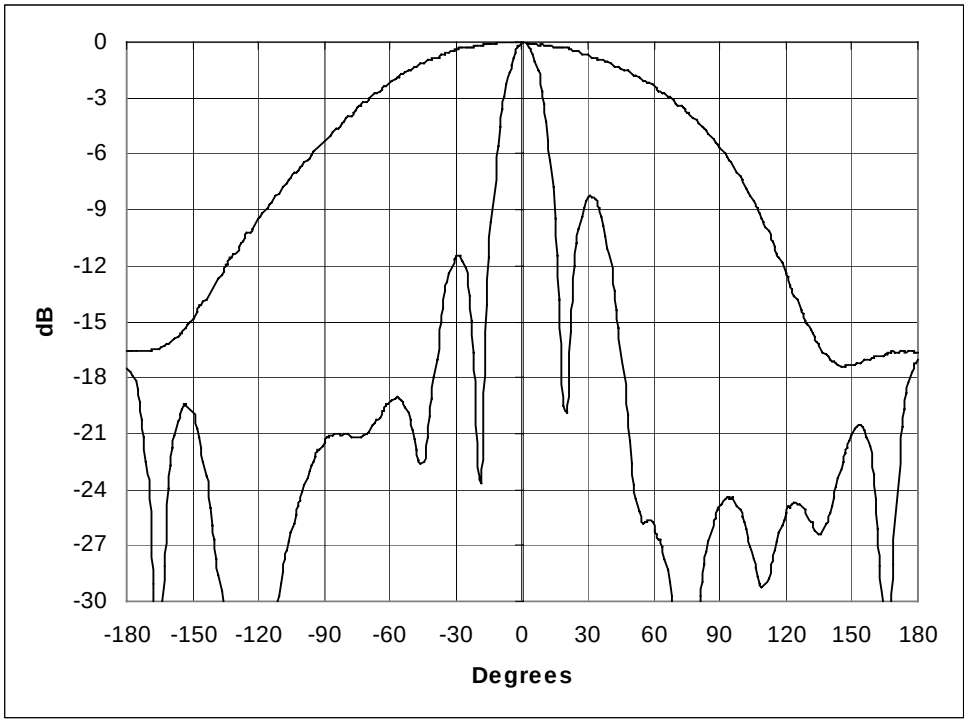

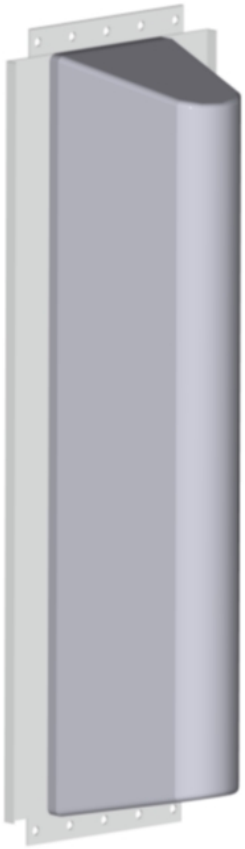

Type	AV4127
Frequency	410...470 MHz
Bandwidth	60 MHz
Impedance	50 Ω DC grounded
VSWR	1,5 max
Polarisation	Vertical
Gain	12,5 dBi
E-plane 3 dB beamwidth	17°
H-plane 3 dB beamwidth	132°
Electrical downtilt	None
Front to back ratio	15 dB
Max. Continuous power	0,5 kW
RF-connector	N or 7/16 female
Operational windspeed	40 m/s (default)
Survival windspeed	55 m/s (default)
Wind area	1,2 m²
Dimensions (H x W x D) (∅ x H)	2100 x 380 x 250 mm
Weight	7,0 kg
Mounting diameter	∅ 30...115 mm pipe
Materials	Aluminium Glassfiber radome Glass reinforced polycarbonate/PE
Options	-

Aerial Oy
Box 22
04401 Järvenpää
Finland
Tel. +358 9 2790 120
Fax +358 9 2910 210
http://www.aerial.fi
aerial@aerial.fi

DIRECTIONAL ANTENNA AV4128

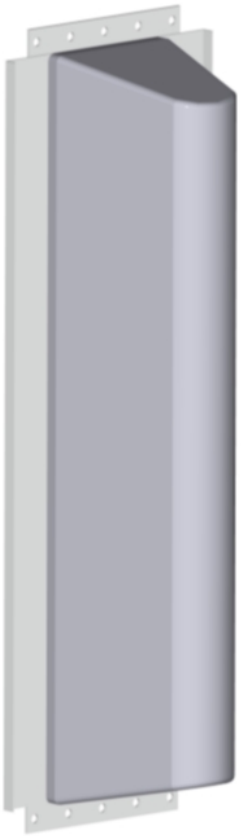

Type	AV4128
Frequency	410...470 MHz
Bandwidth	60 MHz
Impedance	50 Ω DC grounded
VSWR	1,5 max
Polarisation	Vertical
Gain	9,3 dBi
E-plane 3 dB beamwidth	33°
H-plane 3 dB beamwidth	132°
Electrical downtilt	None
Front to back ratio	15 dB
Max. Continuous power	0,5 kW
RF-connector	N or 7/16 female
Operational windspeed	40 m/s (default)
Survival windspeed	55 m/s (default)
Wind area	0,6 m²
Dimensions (H x W x D) (∅ x H)	1100 x 380 x250 mm
Weight	7 kg
Mounting diameter	∅ 30...115 mm pipe
Materials	Aluminium Glassfiber radome Glass reinforced polycarbonate/PE
Options	-

Aerial Oy

Box 22
04401 Järvenpää
Finland

Tel. +358 9 2790 120
Fax +358 9 2910 210

http://www.aerial.fi
aerial@aerial.fi

DIRECTIONAL ANTENNA AV4129

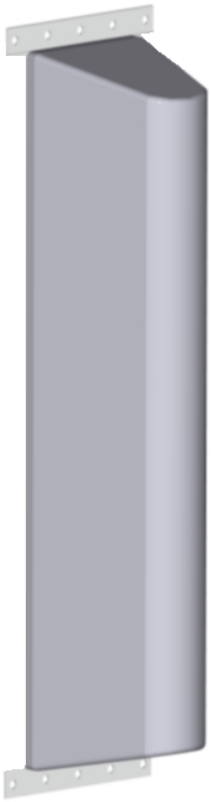

Type	AV4129
Frequencies	380...430 MHz (AV4129-405) 410...470 MHz (AV4129-440)
Bandwidth	50 MHz (AV4129-405) 60 MHz (AV4129-440)
Impedance	50 Ω DC grounded
VSWR	1,5 max
Polarisation	Vertical
Gain	11 dBi
E-plane 3 dB beamwidth	17°
H-plane 3 dB beamwidth	155°
Electrical downtilt	None
Front to back ratio	15 dB
Max. Continuous power	0,5 kW
RF-connector	N or 7/16 female
Operational windspeed	40 m/s (default)
Survival windspeed	55 m/s (default)
Wind area	0,6 m²
Dimensions (H x W x D) (∅ x H)	2100 x 225 x250 mm
Weight	14 kg
Mounting diameter	∅ 30…115 mm pipe
Materials	Aluminium Glassfiber radome Glass reinforced polycarbonate/PE
Options	-

Aerial Oy
Box 22
04401 Järvenpää
Finland
Tel. +358 9 2790 120
Fax +358 9 2910 210
http://www.aerial.fi
aerial@aerial.fi

AV4064 BASESTATION ANTENNA

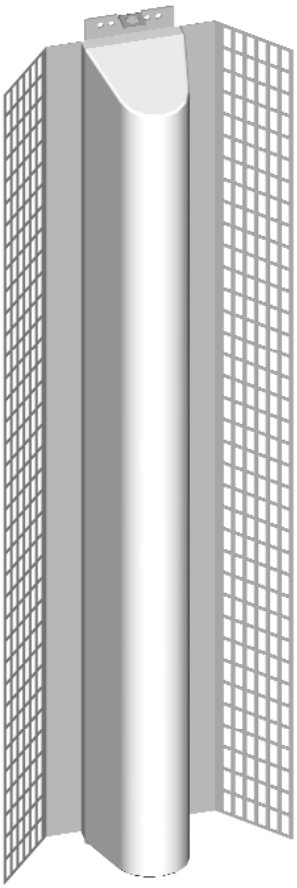

The AV4064 is a high gain 450 MHz basestation antenna with 65º horisontal beamwidth.

The antenna construction includes aluminium framework, power divider and the radiating elements shielded with an UV-resistant fibreglass radome. The radome does not react on matching so the antenna maintains it's SWR performance even if covered by heavy snow and ice.

The low intermodulation values are secured by qualitative connections and precise manufacturing.

The standard inclusive (unless agreed otherwise) mounting kit provides easy installation for the tube diameters from 30 mm to 115 mm.

Type	AV4064
Frequency range	380…470 MHz
Bandwidth	90 MHz
Impedance	50Ω DC grounded
VSWR	1,5 max.
Polarisation	Vertical
Gain	15 dBi
E-plane 3 dB beamwidth	15º
H-plane 3 dB beamwidth	65°
Electrical downtilt	None
Front-to-back ratio	25 dB
Max. Continuous power	0,5 kW
RF-connector	7/16 female or N female
Operational windspeed	40 m/s (default)
Survival windspeed	55 m/s (default)
Wind area	0,36 m²
Dimensions (HxWxD)	2100x600x250 mm
Weight	20 kg
Mounting diameter	Ø 30...115 mm
Materials	Aluminium ABS radome Glass reinforced PE
Options	-

Aerial Oy
Box 22
04401 Järvenpää
Finland
Tel. +358 9 2790 120
Fax +358 9 2910 210
http://www.aerial.fi
aerial@aerial.fi

LOG-PERIODIC DIPOLE ANTENNA LPD150-500

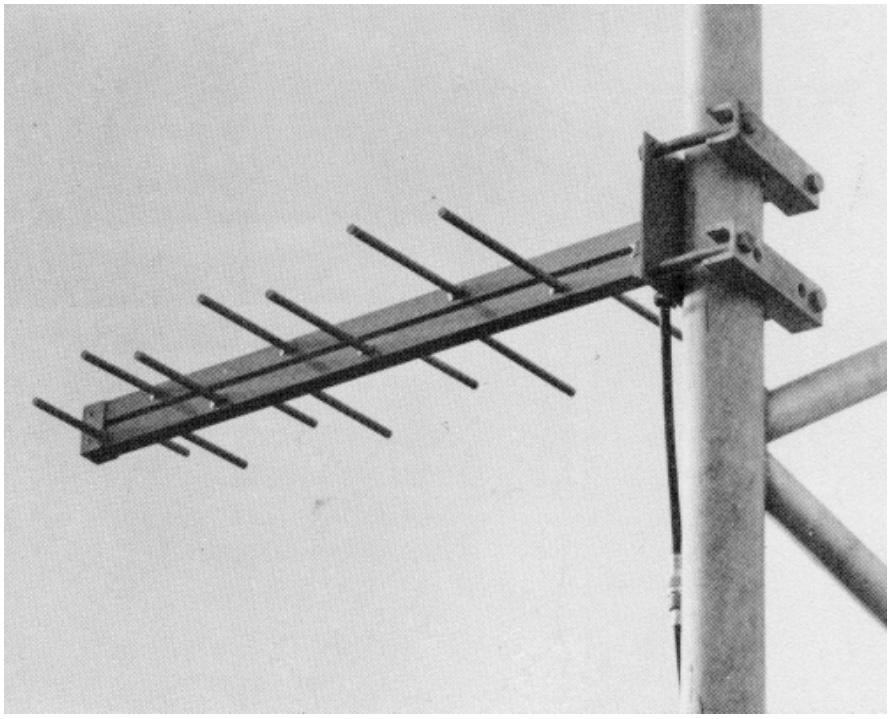

Type	LPD150-500
Frequency	150...500 MHz
Bandwidth	350 MHz
Impedance	50 Ω DC grounded
VSWR	1,5 max
Polarisation	Horisontal or Vertical
Gain	8 dBi
E-plane 3 dB beamwidth	60°
H-plane 3 dB beamwidth	100°
Electrical downtilt	None
Front to back ratio	15 dB
Max. Continuous power	0,5 kW
RF-connector	N or 7/16 female
Operational windspeed	40 m/s (default)
Survival windspeed	55 m/s (default)
Wind area	0,15 m²
Dimensions (HxWxD)	1000x1000x60 mm
Weight	5 kg
Mounting diameter	∅ 30...115 mm pipe
Materials	Aluminium Glassfiber Glass reinforced polycarbonate/PE
Options	Radome

Aerial Oy
Box 22
04401 Järvenpää
Finland
Tel. +358 9 2790 120
Fax +358 9 2910 210
http://www.aerial.fi
aerial@aerial.fi

LOG-PERIODIC DIPOLE ANTENNA LPD290-340

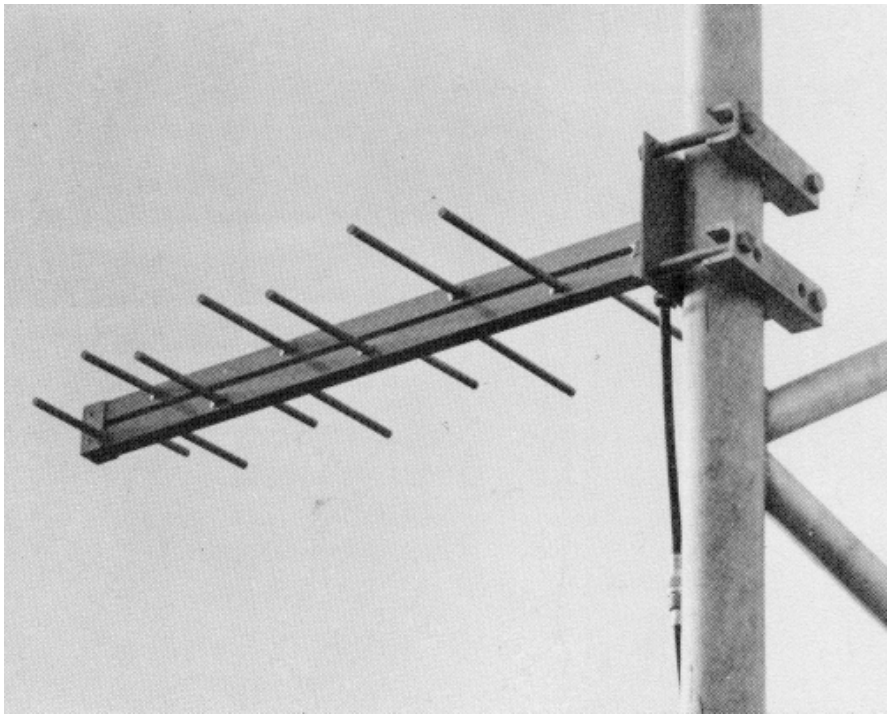

Type	LPD290-340
Frequency	290...340 MHz
Bandwidth	50 MHz
Impedance	50 Ω DC grounded
VSWR	1,5 max
Polarisation	Horisontal or Vertical
Gain	7 dBi
E-plane 3 dB beamwidth	60°
H-plane 3 dB beamwidth	110°
Electrical downtilt	None
Front to back ratio	15 dB
Max. Continuous power	0,5 kW
RF-connector	N or 7/16 female
Operational windspeed	40 m/s (default)
Survival windspeed	55 m/s (default)
Wind area	0,1 m²
Dimensions (H x W x D) (∅ x H)	1000 x 550 x 60 mm
Weight	3 kg
Mounting diameter	∅ 30...115 mm pipe
Materials	Aluminium Glassfiber Glass reinforced polycarbonate/PE
Options	Radome

Aerial Oy
Box 22
04401 Järvenpää
Finland
Tel. +358 9 2790 120
Fax +358 9 2910 210
http://www.aerial.fi
aerial@aerial.fi

LOG-PERIODIC DIPOLE ANTENNA LPD450-470

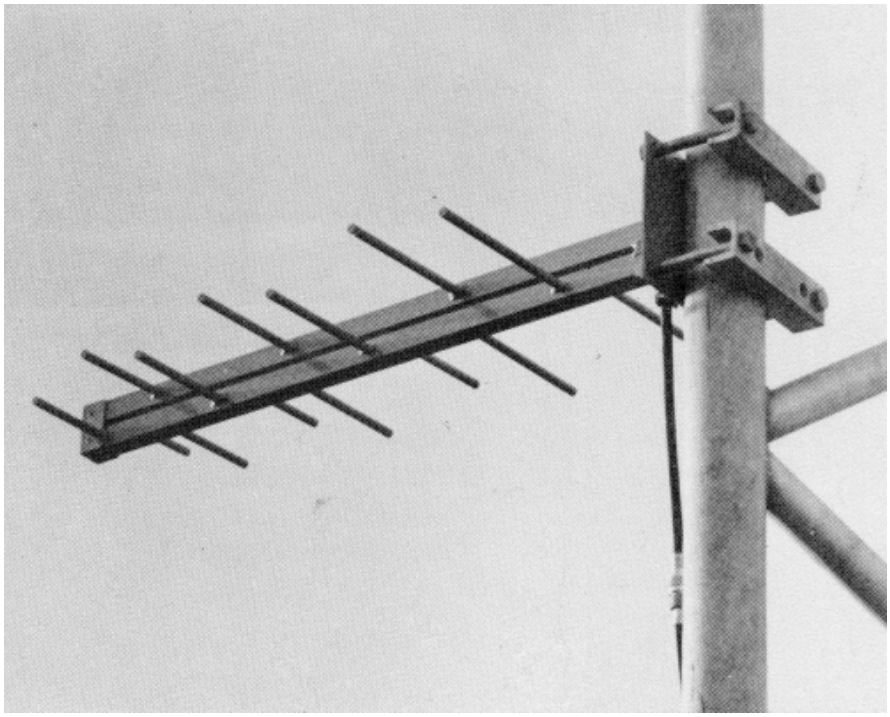

Type	LPD450-470
Frequency	450...470 MHz
Bandwidth	20 MHz
Impedance	50 Ω DC grounded
VSWR	1,5 max
Polarisation	Horisontal or Vertical
Gain	10 dBi
E-plane 3 dB beamwidth	48°
H-plane 3 dB beamwidth	55°
Electrical downtilt	None
Front to back ratio	XX dB
Max. Continuous power	0,5 kW
RF-connector	N or 7/16 female
Operational windspeed	40 m/s (default)
Survival windspeed	55 m/s (default)
Wind area	0,1 m²
Dimensions (H x W x D) (∅ x H)	800 x 380 x 60 mm
Weight	3 kg
Mounting diameter	∅ 30...115 mm pipe
Materials	Aluminium Glassfiber Glass reinforced polycarbonate/PE
Options	Radome Different gain and frequency variations

Aerial Oy
Box 22
04401 Järvenpää
Finland
Tel. +358 9 2790 120
Fax +358 9 2910 210
http://www.aerial.fi
aerial@aerial.fi

OMNIDIRECTIONAL ANTENNA AV1930

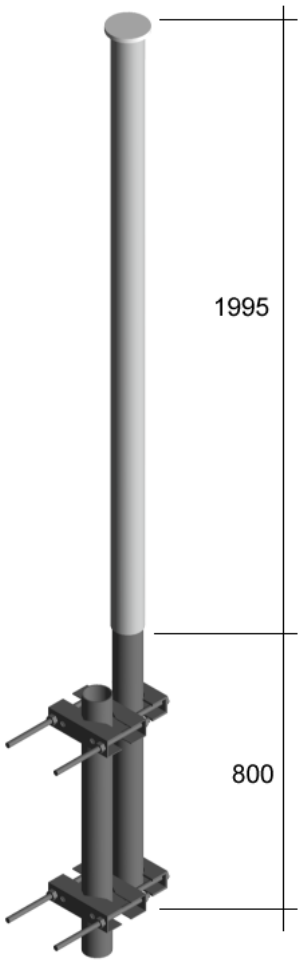

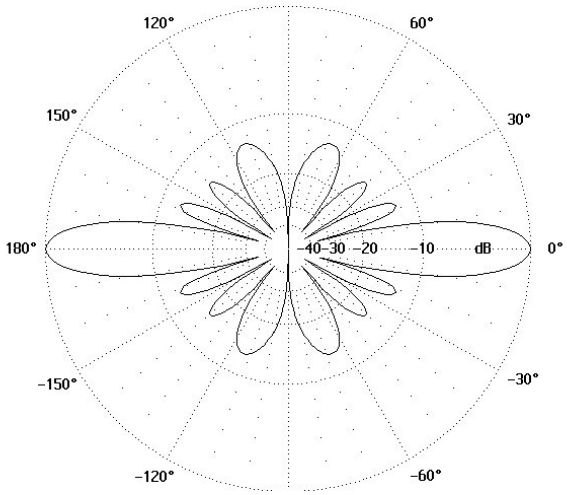

Type	AV1930
Frequency	805...866 MHz
Bandwidth	61 MHz
Impedance	50 Ω DC grounded
VSWR	1,4 max
Polarisation	Vertical
Gain	8 dBi
E-plane 3 dB beamwidth	15°
H-plane 3 dB beamwidth	-°
Electrical downtilt	None
Front to back ratio	- dB
Max. Continuous power	0,5 kW
RF-connector	N or 7/16 female
Operational windspeed	40 m/s (default)
Survival windspeed	55 m/s (default)
Wind area	0,12 m²
Dimensions (H x W x D) (∅ x H)	2795 x 66 mm
Weight	8,5 kg
Mounting diameter	∅ 30...115 mm pipe
Materials	Aluminium Glassfiber radome Glass reinforced PE
Options	-

Aerial Oy
Box 22
04401 Järvenpää
Finland
Tel. +358 9 2790 120
Fax +358 9 2910 210
http://www.aerial.fi
aerial@aerial.fi

DOUBLE UNIT OMNIDIRECTIONAL ANTENNA AV1931

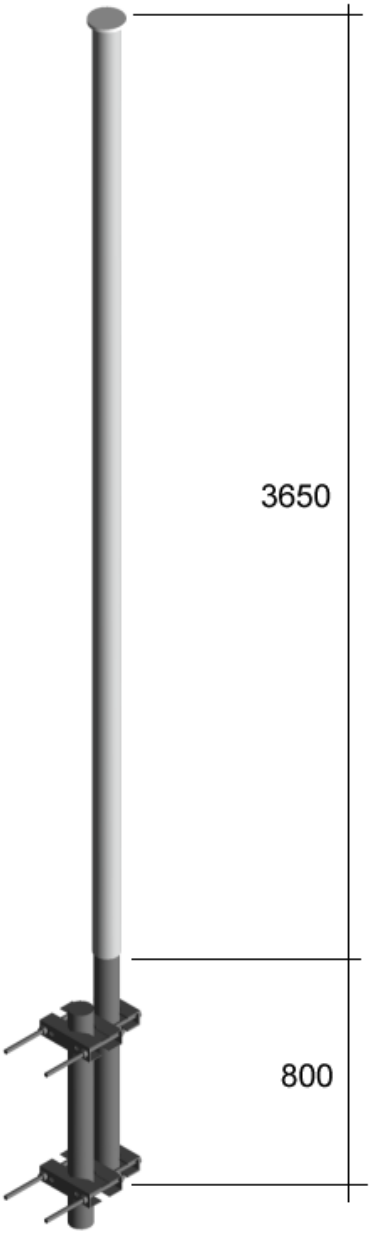

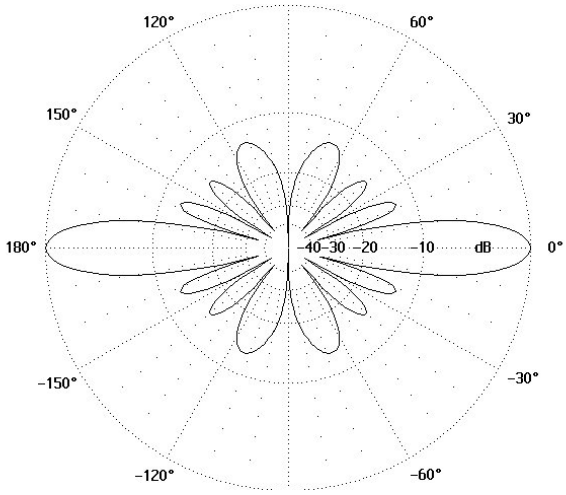

RADITION PATTERN/UNIT

Type	AV1931
Frequency	805...866 MHz
Bandwidth	61 MHz
Impedance	50 Ω DC grounded
VSWR	1,4 max
Polarisation	Vertical
Gain	8 dBi/unit
Isolation between units	30 dB
E-plane 3 dB beamwidth	15°
H-plane 3 dB beamwidth	-°
Electrical downtilt	None
Front to back ratio	- dB
Max. Continuous power	0,5 kW
RF-connector	N or 7/16 female
Operational windspeed	40 m/s (default)
Survival windspeed	55 m/s (default)
Wind area	0,2 m²
Dimensions (H x W x D) (∅ x H)	4450 x 66 mm
Weight	11,5 kg
Mounting diameter	∅ 30...115 mm pipe
Materials	Aluminium Glassfiber radome Glass reinforced PE
Options	-

Aerial Oy

Box 22
04401 Järvenpää
Finland

Tel. +358 9 2790 120
Fax +358 9 2910 210

http://www.aerial.fi
aerial@aerial.fi

OMNIDIRECTIONAL ANTENNA AV1932

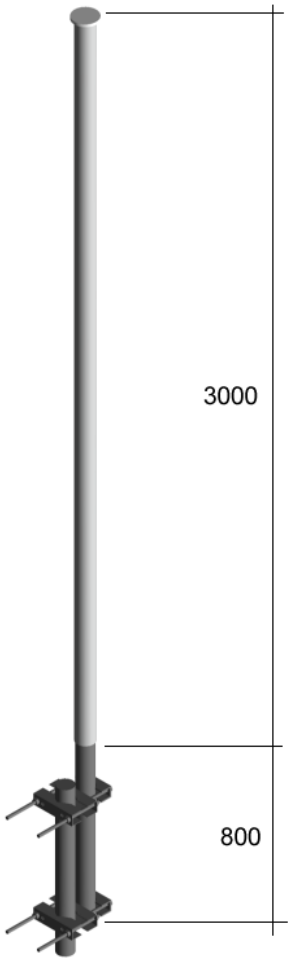

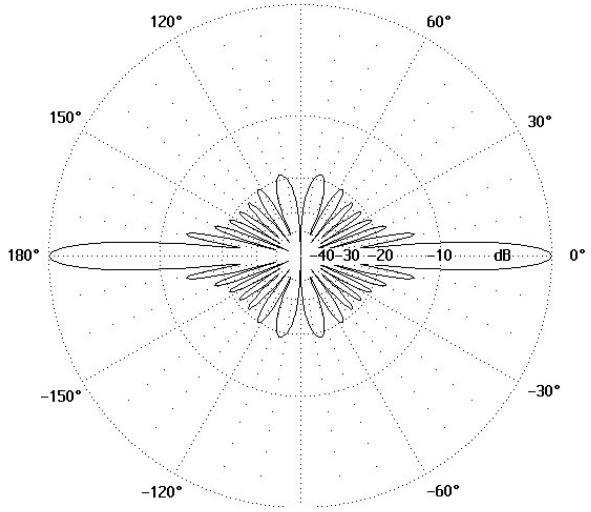

Type	AV1932
Frequency	805…866 MHz
Bandwidth	61 MHz
Impedance	50 Ω DC grounded
VSWR	1,5 max
Polarisation	Vertical
Gain	11 dBi
E-plane 3 dB beamwidth	7,5°
H-plane 3 dB beamwidth	-°
Electrical downtilt	None
Front to back ratio	- dB
Max. Continuous power	0,5 kW
RF-connector	N or 7/16 female
Operational windspeed	40 m/s (default)
Survival windspeed	55 m/s (default)
Wind area	0,18 m²
Dimensions (H x W x D) (∅ x H)	3800 x 66 mm
Weight	10,3 kg
Mounting diameter	∅ 30…115 mm pipe
Materials	Aluminium Glassfiber radome Glass reinforced PE
Options	-

Aerial Oy
Box 22
04401 Järvenpää
Finland
Tel. +358 9 2790 120
Fax +358 9 2910 210
http://www.aerial.fi
aerial@aerial.fi

AV206-800 SERIES

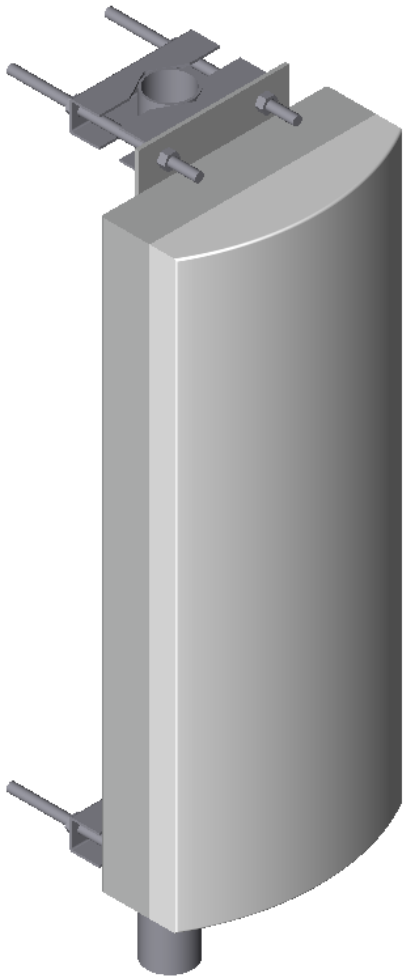

AV206 series contains four antenna alternatives for GSM800 basestation use with 60º beamwidth.

The antenna construction includes aluminium framework, power divider and the radiating elements shielded with an UV-resistant fibreglass radome. The radome does not react on matching so the antenna maintains it's SWR performance even if covered by heavy snow and ice.

The low intermodulation values are secured by qualitative connections and precise manufacturing.

The standard inclusive (unless agreed otherwise) mounting kit provides easy installation for the tube diameters from 30 mm to 115 mm.

The durability and high performance of the AV206 series provides you a real corner-stone for your cellular network in any weather conditions.

Type	AV2060-800	AV2062-800	AV2064-800	AV2068-800
Frequency range	805...870 MHz	805...870 MHz	805...870 MHz	805...870 MHz
Bandwidth	65 MHz	65 MHz	65 MHz	65 MHz
Impedance	50Ω DC grounded	50Ω DC grounded	50Ω DC grounded	50Ω DC grounded
VSWR	1,3	1,3	1,3	1,3
Polarisation	Vertical	Vertical	Vertical	Vertical
Gain	10 dBi	13 dBi	16 dBi	18,5 dBi
E-plane 3 dB beamwidth	50º	30°	15º	7,5º
H-plane 3 dB beamwidth	62º	62°	62°	62°
Electrical downtilt	None	None	None	None
Front-to-back ratio	25 dB	25 dB	25 dB	25 dB
Max. Continuous power	0,5 kW	0,5 kW	0,5 kW	0,5 kW
RF-connector	7/16 female	7/16 female	7/16 female	7/16 female
Operational windspeed	40 m/s (default)	40 m/s (default)	40 m/s (default)	40 m/s (default)
Survival windspeed	55 m/s (default)	55 m/s (default)	55 m/s (default)	55 m/s (default)
Wind area	0,1 m²	0,2 m²	0,36 m²	0,72 m²
Dimensions (HxWxD)	250x300x130 mm	650x300x130 mm	1150x300x130 mm	2210x300x130 mm
Weight	2 kg	3 kg	5 kg	9 kg
Mounting diameter	Ø 30...115 mm	Ø 30...115 mm	Ø 30...115 mm	Ø 30...115 mm
Materials	Aluminium Glassfiber radome Glass reinforced PE	Aluminium Glassfiber radome Glass reinforced PE	Aluminium Glassfiber radome Glass reinforced PE	Aluminium Glassfiber radome Glass reinforced PE
Options	-	-	-	-

Aerial Oy
Box 22
04401 Järvenpää
Finland
Tel. +358 9 2790 120
Fax +358 9 2910 210
http://www.aerial.fi
aerial@aerial.fi

AV209-800 SERIES

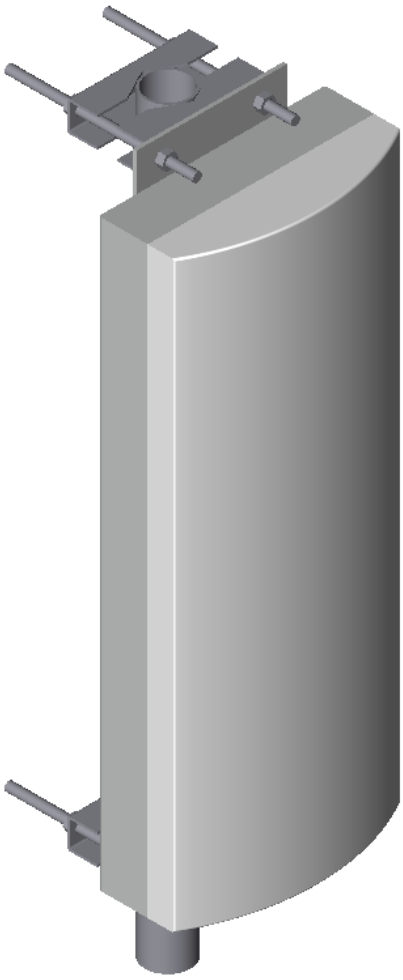

AV209 series contains four antenna alternatives for GSM800 basestation use with 90º beamwidth.

The antenna construction includes aluminium framework, power divider and the radiating elements shielded with an UV-resistant fibreglass radome. The radome does not react on matching so the antenna maintains it's SWR performance even if covered by heavy snow and ice.

The low intermodulation values are secured by qualitative connections and precise manufacturing.

The standard inclusive (unless agreed otherwise) mounting kit provides easy installation for the tube diameters from 30 mm to 115 mm.

The durability and high performance of the AV209 series provides you a real corner-stone for your cellular network in any weather conditions.

Type	AV2090-800	AV2092-800	AV2094-800	AV2098-800
Frequency range	805...870 MHz	805...870 MHz	805...870 MHz	805...870 MHz
Bandwidth	65 MHz	65 MHz	65 MHz	65 MHz
Impedance	50Ω DC grounded	50Ω DC grounded	50Ω DC grounded	50Ω DC grounded
VSWR	1,3	1,3	1,3	1,3
Polarisation	Vertical	Vertical	Vertical	Vertical
Gain	8,5 dBi	11 dBi	14 dBi	17 dBi
E-plane 3 dB beamwidth	50º	30°	15º	7,5º
H-plane 3 dB beamwidth	90º	90º	90º	90º
Electrical downtilt	None	None	None	None
Front-to-back ratio	20 dB	20 dB	20 dB	20 dB
Max. Continuous power	0,5 kW	0,5 kW	0,5 kW	0,5 kW
RF-connector	7/16 female	7/16 female	7/16 female	7/16 female
Operational windspeed	40 m/s (default)	40 m/s (default)	40 m/s (default)	40 m/s (default)
Survival windspeed	55 m/s (default)	55 m/s (default)	55 m/s (default)	55 m/s (default)
Wind area	0,1 m²	0,2 m²	0,36 m²	0,72 m²
Dimensions (HxWxD)	250x300x130 mm	650x300x130 mm	1150x300x130 mm	2210x300x130 mm
Weight	2 kg	3 kg	5 kg	9 kg
Mounting diameter	Ø 30...115 mm	Ø 30...115 mm	Ø 30...115 mm	Ø 30...115 mm
Materials	Aluminium Glassfiber radome Glass reinforced PE	Aluminium Glassfiber radome Glass reinforced PE	Aluminium Glassfiber radome Glass reinforced PE	Aluminium Glassfiber radome Glass reinforced PE
Options	-	-	-	-

Aerial Oy
Box 22
04401 Järvenpää
Finland
Tel. +358 9 2790 120
Fax +358 9 2910 210
http://www.aerial.fi
aerial@aerial.fi

AV212-800 SERIES

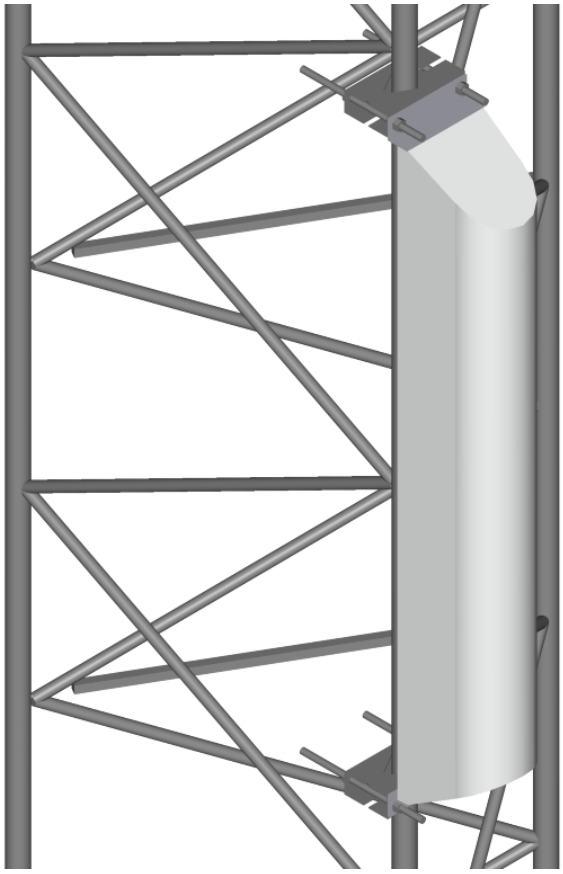

AV212 series contains four antenna alternatives for GSM800 basestation use with 120º beamwidth.

The antenna construction includes aluminium framework, power divider and the radiating elements shielded with an UV-resistant fibreglass radome. The radome does not react on matching so the antenna maintains it's SWR performance even if covered by heavy snow and ice.

The low intermodulation values are secured by qualitative connections and precise manufacturing.

The standard inclusive (unless agreed otherwise) mounting kit provides easy installation for the tube diameters from 30 mm to 115 mm.

The durability and high performance of the AV212 series provides you a real corner-stone for your cellular network in any weather conditions.

Type	AV2120-800	AV2122-800	AV2124-800	AV2128-800
Frequency range	805...870 MHz	805...870 MHz	805...870 MHz	805...870 MHz
Bandwidth	65 MHz	65 MHz	65 MHz	65 MHz
Impedance	50Ω DC grounded	50Ω DC grounded	50Ω DC grounded	50Ω DC grounded
VSWR	1,3	1,3	1,3	1,3
Polarisation	Vertical	Vertical	Vertical	Vertical
Gain	7 dBi	10 dBi	12,5 dBi	15 dBi
E-plane 3 dB beamwidth	70º	35°	15º	7,5º
H-plane 3 dB beamwidth	120º	120º	120º	120º
Electrical downtilt	None	None	None	None
Front-to-back ratio	15 dB	15 dB	20 dB	20 dB
Max. Continuous power	0,5 kW	0,5 kW	0,5 kW	0,5 kW
RF-connector	7/16 female	7/16 female	7/16 female	7/16 female
Operational windspeed	40 m/s (default)	40 m/s (default)	40 m/s (default)	40 m/s (default)
Survival windspeed	55 m/s (default)	55 m/s (default)	55 m/s (default)	55 m/s (default)
Wind area	0,1 m²	0,15 m²	0,25 m²	0,6 m²
Dimensions (HxWxD)	250x160x110 mm	650x160x110 mm	1150x160x110 mm	2210x160x150 mm
Weight	2 kg	5 kg	7 kg	11 kg
Mounting diameter	Ø 30...115 mm	Ø 30...115 mm	Ø 30...115 mm	Ø 30...115 mm
Materials	Aluminium Glassfiber radome Glass reinforced PE	Aluminium Glassfiber radome Glass reinforced PE	Aluminium Glassfiber radome Glass reinforced PE	Aluminium Glassfiber radome Glass reinforced PE
Options	-	-	-	-

Aerial Oy
Box 22
04401 Järvenpää
Finland
Tel. +358 9 2790 120
Fax +358 9 2910 210
http://www.aerial.fi
aerial@aerial.fi

OMNIDIRECTIONAL ANTENNA AV7001

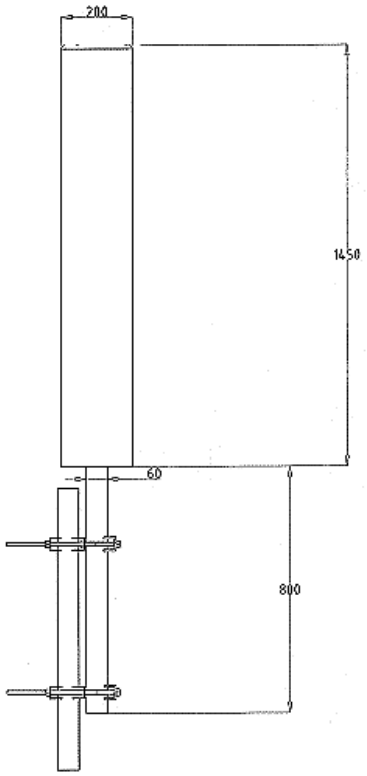

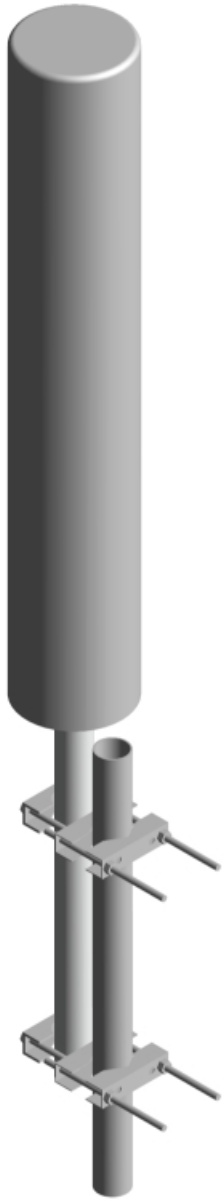

Type	AV7001
Frequency	805..821 MHz/GHz
Bandwidth	16 MHz
Impedance	50 Ω DC grounded
VSWR	1,5 max
Polarisation	Horisontal
Gain	8 dBi
E-plane 3 dB beamwidth	-°
H-plane 3 dB beamwidth	15°
Electrical downtilt	None
Front to back ratio	- dB
Max. Continuous power	0,5 kW
RF-connector	N or 7/16 female
Operational windspeed	40 m/s (default)
Survival windspeed	55 m/s (default)
Wind area	0,3 m²
Dimensions (∅ x H)	2250 x 200 mm
Weight	8 kg
Mounting diameter	∅ 30...115 mm pipe
Materials	Aluminium Glassfiber radome Glass reinforced PE
Options	-

Aerial Oy

Box 22
04401 Järvenpää
Finland

Tel. +358 9 2790 120
Fax +358 9 2910 210

http://www.aerial.fi
aerial@aerial.fi

OMNIDIRECTIONAL ANTENNA AV7002

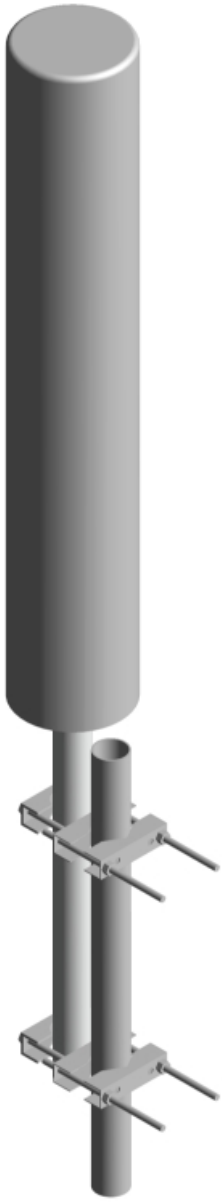

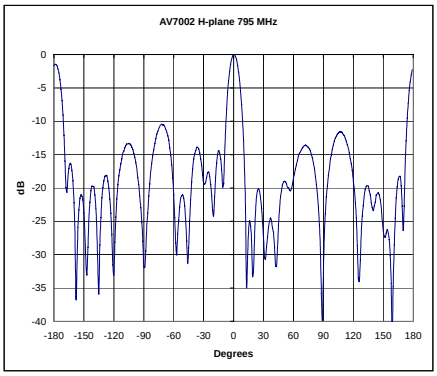

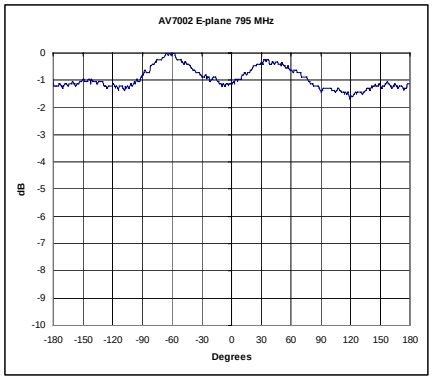

Type	AV7002
Frequency	805...821 MHz
Bandwidth	16 MHz
Impedance	50 Ω DC grounded
VSWR	1,5 max
Polarisation	Horisontal
Gain	10 dBi
E-plane 3 dB beamwidth	-°
H-plane 3 dB beamwidth	9°
Electrical downtilt	None
Front to back ratio	- dB
Max. Continuous power	0,5 kW
RF-connector	N or 7/16 female
Operational windspeed	40 m/s (default)
Survival windspeed	55 m/s (default)
Wind area	0,46 m²
Dimensions (H x W x D) (∅ x H)	2830 x 200 mm
Weight	15 kg
Mounting diameter	∅ 30...115 mm pipe
Materials	Aluminium Hot dip galvanised framework Glassfiber radome Glass reinforced PE
Options	-

Aerial Oy

Box 22
04401 Järvenpää
Finland

Tel. +358 9 2790 120
Fax +358 9 2910 210

http://www.aerial.fi
aerial@aerial.fi

OMNIDIRECTIONAL ANTENNA AV1427

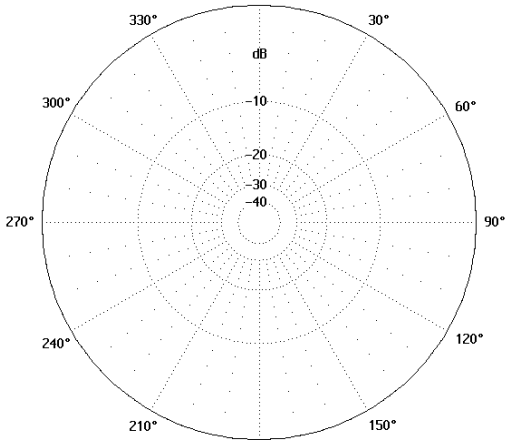

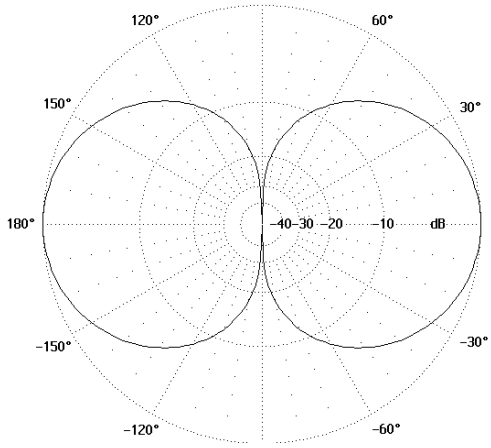

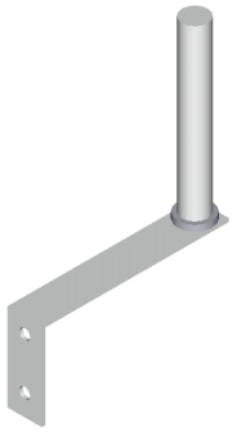

Type	AV1427
Frequency	870…960 MHz
Bandwidth	90 MHz
Impedance	50 Ω
VSWR	1,7 typical
Polarisation	Vertical
Gain	2,2 dBi
E-plane 3 dB beamwidth	70°
H-plane 3 dB beamwidth	-°
Electrical downtilt	None
Front to back ratio	- dB
Max. Continuous power	0,5 kW
RF-connector	N or TNC female
Operational windspeed	40 m/s (default)
Survival windspeed	55 m/s (default)
Wind area	0,01 m²
Dimensions (H x W x D) (∅ x H)	235 x 40 x 40 mm
Weight	0,4 kg
Mounting	1) On horisontal plane or ceiling upside down. 2) On top of the mounting pipe ∅ max. 40 mm. 3) Adjacent to the mounting pipe∅ max. 40 mm. 4) On the wall (D) (in picture) with a 200 mm arm.
Materials	Aluminium Glassfiber radome Glass reinforced PE
Options	-

Aerial Oy
Box 22
04401 Järvenpää
Finland
Tel. +358 9 2790 120
Fax +358 9 2910 210
http://www.aerial.fi
aerial@aerial.fi

YAGI ANTENNA AV1466

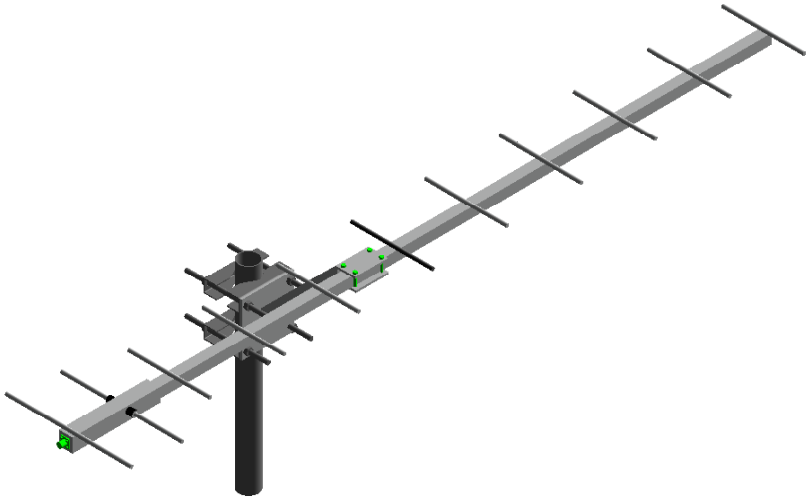

Type	AV1466
Frequency	890...960 MHz
Bandwidth	70 MHz
Impedance	50 Ω DC grounded
VSWR	1,4 max
Polarisation	Horisontal or Vertical
Gain	14 dBi
E-plane 3 dB beamwidth	30°
H-plane 3 dB beamwidth	35°
Electrical downtilt	None
Front to back ratio	15 dB
Max. Continuous power	0,5 kW
RF-connector	N or 7/16 female
Operational windspeed	40 m/s (default)
Survival windspeed	55 m/s (default)
Wind area	0,1 m²
Dimensions (H x W x D) (∅ x H)	1370 x 160 x 50 mm
Weight	3,3 kg
Mounting diameter	∅ 30...115 mm pipe
Materials	Aluminium Glassfiber radome Glass reinforced PE
Options	-

Aerial Oy
Box 22
04401 Järvenpää
Finland
Tel. +358 9 2790 120
Fax +358 9 2910 210
http://www.aerial.fi
aerial@aerial.fi

DIRECTIONAL ANTENNA AV1521

Type	AV1521
Frequency	890...960 MHz
Bandwidth	70 MHz
Impedance	50 Ω DC grounded
VSWR	1,5 max
Polarisation	Vertical
Gain	5 dBi
E-plane 3 dB beamwidth	60°
H-plane 3 dB beamwidth	120°
Electrical downtilt	None
Front to back ratio	15 dB
Max. Continuous power	0,5 kW
RF-connector	N or SMA female
Operational windspeed	40 m/s (default)
Survival windspeed	55 m/s (default)
Wind area	0,05 m²
Dimensions (H x W x D) (∅ x H)	200 x 40 mm
Weight	0,5 kg
Mounting diameter	On wall or ceiling
Materials	Aluminium Glassfiber radome Glass reinforced PE
Options	Colour

Aerial Oy

Box 22
04401 Järvenpää
Finland

Tel. +358 9 2790 120
Fax +358 9 2910 210

http://www.aerial.fi
aerial@aerial.fi

OMNIDIRECTIONAL ANTENNA AV1916

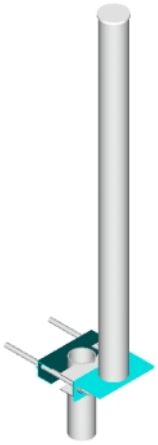

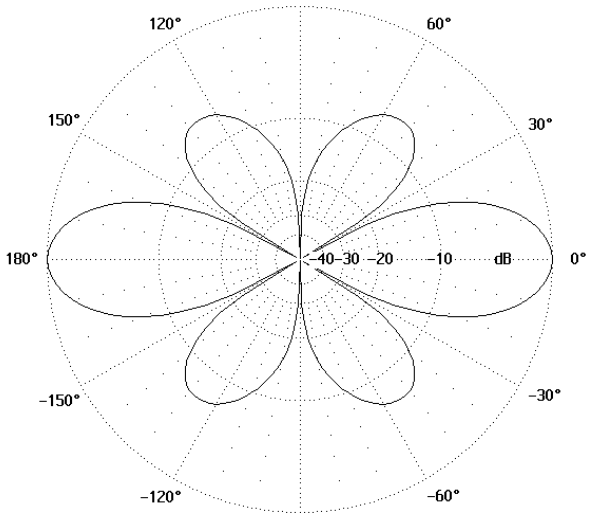

Type	AV1916
Frequency	870…960 MHz
Bandwidth	90 MHz
Impedance	50 Ω DC grounded
VSWR	1,5 max
Polarisation	Vertical
Gain	6 dBi
E-plane 3 dB beamwidth	26°
H-plane 3 dB beamwidth	-°
Electrical downtilt	None
Front to back ratio	- dB
Max. Continuous power	0,5 kW
RF-connector	N or 7/16 female
Operational windspeed	40 m/s (default)
Survival windspeed	55 m/s (default)
Wind area	0,05 m²
Dimensions (H x W x D) (∅ x H)	65 (160) x 975 mm
Weight	2 kg
Mounting diameter	∅ 30…115 mm pipe
Materials	Aluminium Glassfiber radome Glass reinforced PE
Options	-

Aerial Oy
Box 22
04401 Järvenpää
Finland
Tel. +358 9 2790 120
Fax +358 9 2910 210
http://www.aerial.fi
aerial@aerial.fi

OMNIDIRECTIONAL ANTENNA AV1917

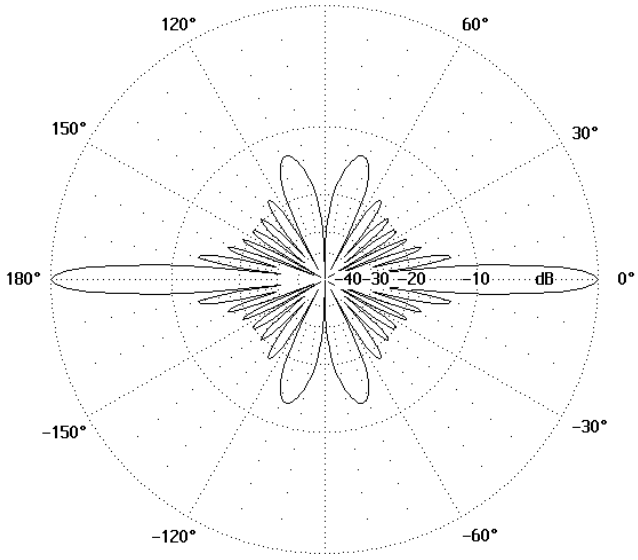

Type	AV1917
Frequency	890...960 MHz
Bandwidth	70 MHz
Impedance	50 Ω DC grounded
VSWR	1,5 max
Polarisation	Vertical
Gain	11 dBi
E-plane 3 dB beamwidth	7°
H-plane 3 dB beamwidth	-°
Electrical downtilt	None
Front to back ratio	- dB
Max. Continuous power	0,5 kW
RF-connector	N or 7/16 female
Operational windspeed	40 m/s (default)
Survival windspeed	55 m/s (default)
Wind area	0,17 m²
Dimensions (H x W x D) (∅ x H)	65 x 3000 mm
Weight	8 kg
Mounting diameter	∅ 30...115 mm pipe
Materials	Aluminium Glassfiber radome Glass reinforced PE
Options	-

Aerial Oy

Box 22
04401 Järvenpää
Finland

Tel. +358 9 2790 120
Fax +358 9 2910 210

http://www.aerial.fi
aerial@aerial.fi

OMNIDIRECTIONAL ANTENNA AV1918

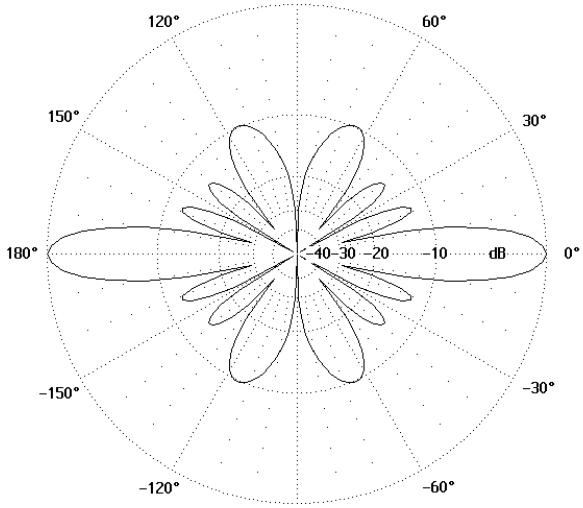

Type	AV1918
Frequency	890...960 MHz/GHz
Bandwidth	70 MHz
Impedance	50 Ω DC grounded
VSWR	1,5 max
Polarisation	Vertical
Gain	8 dBi
E-plane 3 dB beamwidth	15°
H-plane 3 dB beamwidth	-°
Electrical downtilt	None
Front to back ratio	- dB
Max. Continuous power	0,5 kW
RF-connector	N or 7/16 female
Operational windspeed	40 m/s (default)
Survival windspeed	55 m/s (default)
Wind area	0,10 m²
Dimensions (H x W x D) (∅ x H)	60 x 1900 mm
Weight	5 kg
Mounting diameter	∅ 30...115 mm pipe
Materials	Aluminium Glassfiber radome Glass reinforced PE
Options	-

Aerial Oy

Box 22
04401 Järvenpää
Finland

Tel. +358 9 2790 120
Fax +358 9 2910 210

http://www.aerial.fi
aerial@aerial.fi

DOUBLE UNIT OMNIDIRECTIONAL ANTENNA AV1918-2

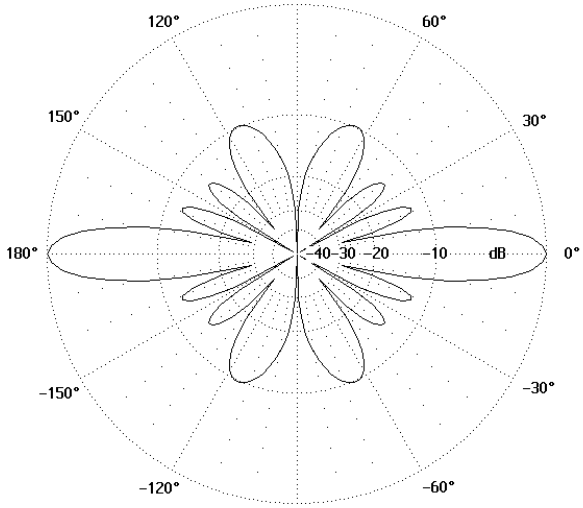

Type	AV1918-2
Frequency	890...960 MHz/GHz
Bandwidth	70 MHz
Impedance	50 Ω DC grounded
VSWR	1,5 max
Polarisation	Vertical
Gain	8 dBi/unit
E-plane 3 dB beamwidth	15°
H-plane 3 dB beamwidth	-°
Electrical downtilt	None
Front to back ratio	- Db
Max. Continuous power	0,5 kW
RF-connector	N or 7/16 female
Operational windspeed	40 m/s (default)
Survival windspeed	55 m/s (default)
Wind area	0,10 m²
Dimensions (H x W x D) (∅ x H)	60 x 3000 mm
Weight	5 kg
Mounting diameter	∅ 30...115 mm pipe
Materials	Aluminium Glassfiber radome Glass reinforced PE
Options	-

Aerial Oy

Box 22
04401 Järvenpää
Finland

Tel. +358 9 2790 120
Fax +358 9 2910 210

http://www.aerial.fi
aerial@aerial.fi

OMNIDIRECTIONAL ANTENNA AV1918-LT

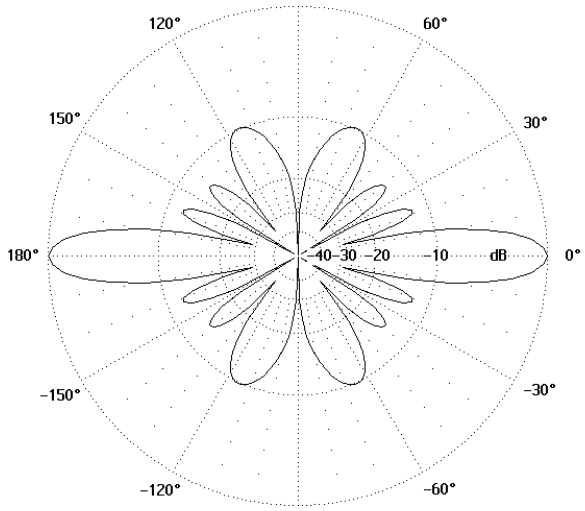

Type	AV1918-LT
Frequency	890...960 MHz
Bandwidth	70 MHz
Impedance	50 Ω DC grounded
VSWR	1,5 max
Polarisation	Vertical
Gain	8 dBi
E-plane 3 dB beamwidth	15°
H-plane 3 dB beamwidth	-°
Electrical downtilt	None
Front to back ratio	- dB
Max. Continuous power	0,5 kW
RF-connector	N or 7/16 female
Operational windspeed	40 m/s (default)
Survival windspeed	55 m/s (default)
Wind area	0,8 m²
Dimensions (H x W x D) (∅ x H)	60...100 x 8000 mm
Weight	25 kg
Mounting diameter	∅ 30...115 mm pipe
Materials	Aluminium Glassfiber radome Glass reinforced PE
Options	Lenght

This 8 dBi omnidirectional GSM 900 basestation antenna is integrated with a standard 8 m high glassfiber flagpole. The collinear type radiating elements are built inside the top of the flagpole. The feed cable is drawn down through the inclusive flagpole mounting flange.

Aerial Oy
Box 22
04401 Järvenpää
Finland
Tel. +358 9 2790 120
Fax +358 9 2910 210
http://www.aerial.fi
aerial@aerial.fi

MULTIBAND OMNIDIRECTIONAL ANTENNA AV1950

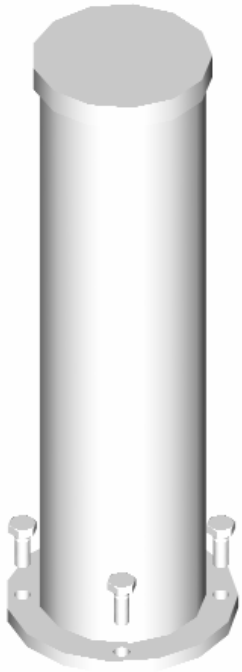

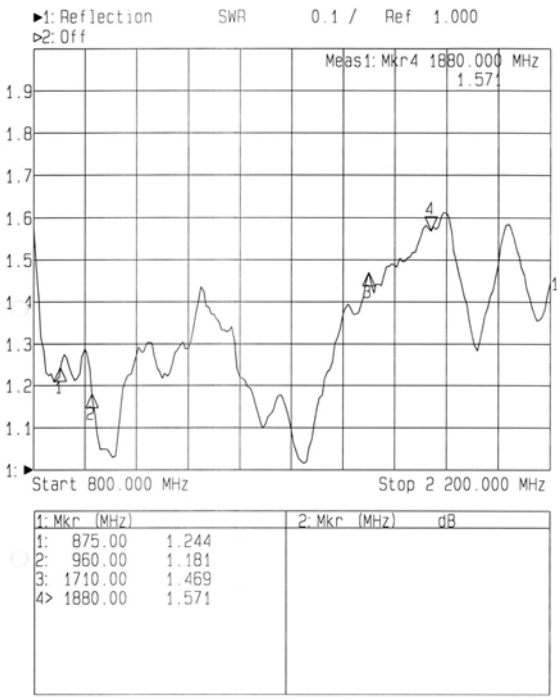

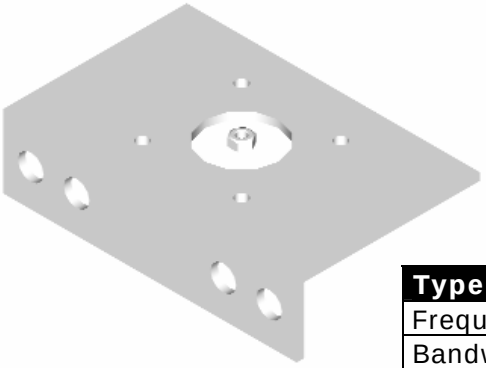

AV1950 can be installed either with the standard AETM160-6-L mounting set or directly from the round flange.

Type	AV1950
Frequency	870...2170 MHz
Bandwidth	1300 MHz
Impedance	50 Ω
VSWR	1,5 typical
Polarisation	Vertical
Gain	2...4 dBi
E-plane 3 dB beamwidth	70...35°
H-plane 3 dB beamwidth	-°
Electrical downtilt	None
Front to back ratio	- dB
Max. Continuous power	0,5 kW
RF-connector	N-female
Operational windspeed	40 m/s (default)
Survival windspeed	55 m/s (default)
Wind area	0,2 m²
Dimensions (H x W x D) (∅ x H)	360 x 80 x 160 mm
Weight	1,5 kg
Mounting diameter	∅ 30...115 mm pipe or flange
Materials	Aluminium Glassfiber radome Glass reinforced PE
Options	Connector type

Aerial Oy
Box 22
04401 Järvenpää
Finland
Tel. +358 9 2790 120
Fax +358 9 2910 210
http://www.aerial.fi
aerial@aerial.fi

HIGH GAIN BASESTATION ANTENNA AV2038

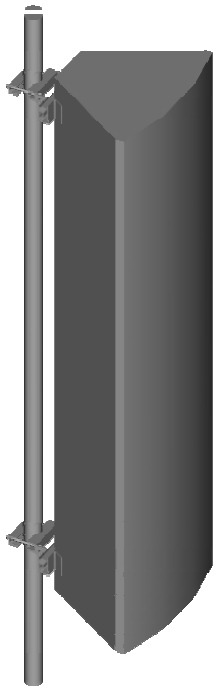

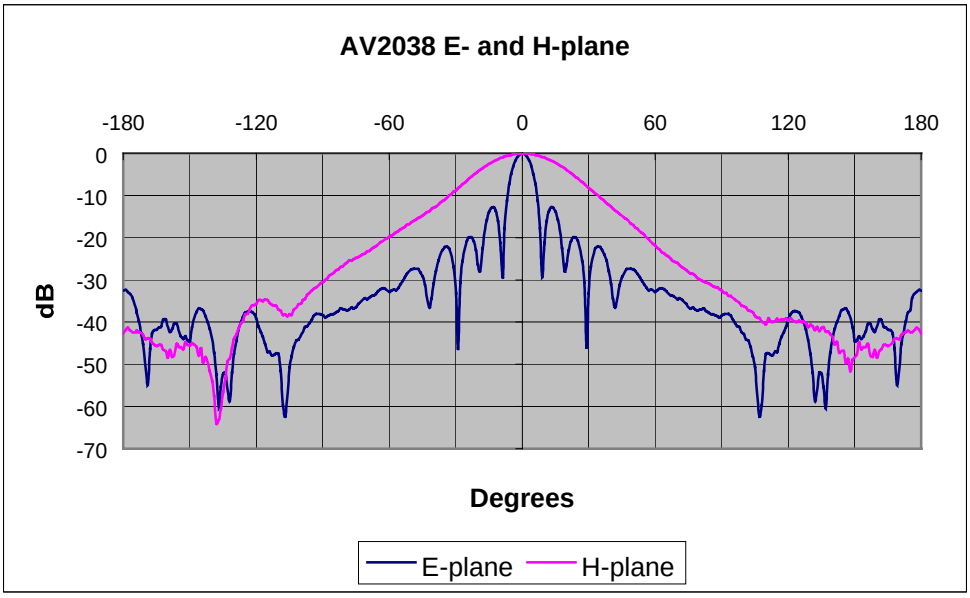

Type	AV2038
Frequency	870...960 MHz
Bandwidth	90 MHz
Impedance	50 Ω DC grounded
VSWR	1,3 max
Polarisation	Vertical
Gain	21 dBi
E-plane 3 dB beamwidth	7,5°
H-plane 3 dB beamwidth	30°
Electrical downtilt	None
Front to back ratio	30 dB
Max. Continuous power	0,5 kW
RF-connector	N or 7/16 female
Operational windspeed	40 m/s (default)
Survival windspeed	55 m/s (default)
Wind area	1,2 m²
Dimensions (H x W x D) (∅ x H)	2300 x 600 x 500 mm
Weight	20 kg
Mounting diameter	∅ 30...115 mm pipe
Materials	Aluminium Glassfiber radome Glass reinforced PE
Options	-

Aerial Oy
Box 22
04401 Järvenpää
Finland
Tel. +358 9 2790 120
Fax +358 9 2910 210
http://www.aerial.fi
aerial@aerial.fi

AV206 SERIES

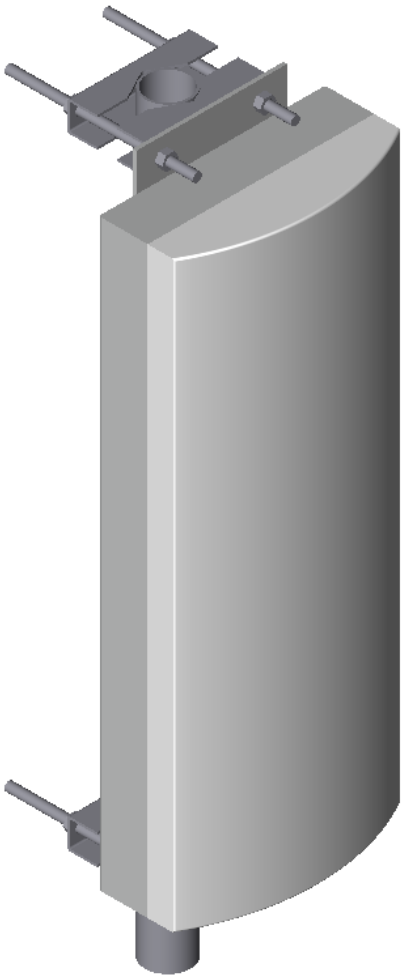

AV206 series contains four antenna alternatives for GSM 900 basestation use with 60º beamwidth.

The antenna construction includes aluminium framework, power divider and the radiating elements shielded with an UV-resistant fibreglass radome. The radome does not react on matching so the antenna maintains it's SWR performance even if covered by heavy snow and ice.

The low intermodulation values are secured by qualitative connections and precise manufacturing.

The standard inclusive (unless agreed otherwise) mounting kit provides easy installation for the tube diameters from 30 mm to 115 mm.

The durability and high performance of the AV206 series provides you a real corner-stone for your cellular network in any weather conditions.

Type	AV2060	AV2062	AV2064	AV2068
Frequency range	870...960 MHz	870...960 MHz	870...960 MHz	870...960 MHz
Bandwidth	90 MHz	90 MHz	90 MHz	90 MHz
Impedance	50Ω DC grounded	50Ω DC grounded	50Ω DC grounded	50Ω DC grounded
VSWR	1,3	1,3	1,3	1,3
Polarisation	Vertical	Vertical	Vertical	Vertical
Gain	10 dBi	13 dBi	16 dBi	18,5 dBi
E-plane 3 dB beamwidth	50º	30°	15º	7,5º
H-plane 3 dB beamwidth	62º	62°	62°	62°
Electrical downtilt	None	None	None	None
Front-to-back ratio	25 dB	25 dB	25 dB	25 dB
Max. Continuous power	0,5 kW	0,5 kW	0,5 kW	0,5 kW
RF-connector	7/16 female	7/16 female	7/16 female	7/16 female
Operational windspeed	40 m/s (default)	40 m/s (default)	40 m/s (default)	40 m/s (default)
Survival windspeed	55 m/s (default)	55 m/s (default)	55 m/s (default)	55 m/s (default)
Wind area	0,1 m²	0,2 m²	0,36 m²	0,72 m²
Dimensions (HxWxD)	250x300x130 mm	650x300x130 mm	1150x300x130 mm	2210x300x130 mm
Weight	2 kg	3 kg	5 kg	9 kg
Mounting diameter	Ø 30...115 mm	Ø 30...115 mm	Ø 30...115 mm	Ø 30...115 mm
Materials	Aluminium Glassfiber radome Glass reinforced PE	Aluminium Glassfiber radome Glass reinforced PE	Aluminium Glassfiber radome Glass reinforced PE	Aluminium Glassfiber radome Glass reinforced PE
Options	-	-	-	-

Aerial Oy

Box 22
04401 Järvenpää
Finland

Tel. +358 9 2790 120
Fax +358 9 2910 210

http://www.aerial.fi
aerial@aerial.fi

AV209 SERIES

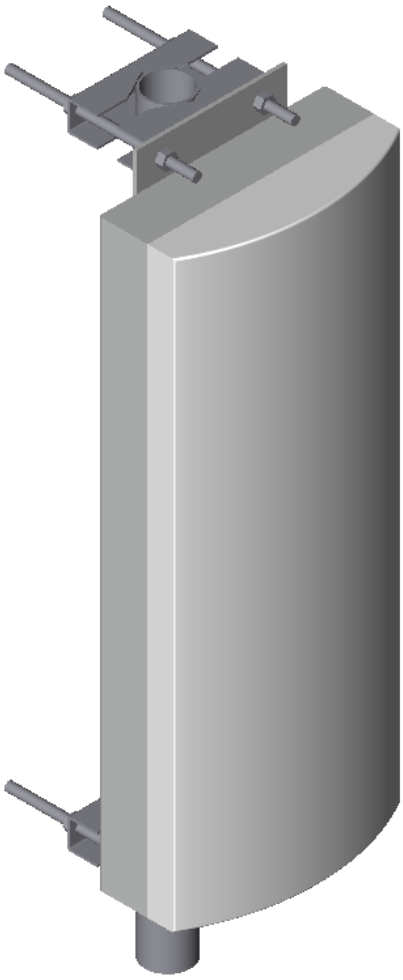

AV209 series contains four antenna alternatives for GSM 900 basestation use with 90º beamwidth.

The antenna construction includes aluminium framework, power divider and the radiating elements shielded with an UV-resistant fibreglass radome. The radome does not react on matching so the antenna maintains it's SWR performance even if covered by heavy snow and ice.

The low intermodulation values are secured by qualitative connections and precise manufacturing.

The standard inclusive (unless agreed otherwise) mounting kit provides easy installation for the tube diameters from 30 mm to 115 mm.

The durability and high performance of the AV209 series provides you a real corner-stone for your cellular network in any weather conditions.

Type	AV2090	AV2092	AV2094	AV2098
Frequency range	870...960 MHz	870...960 MHz	870...960 MHz	870...960 MHz
Bandwidth	90 MHz	90 MHz	90 MHz	90 MHz
Impedance	50Ω DC grounded	50Ω DC grounded	50Ω DC grounded	50Ω DC grounded
VSWR	1,3	1,3	1,3	1,3
Polarisation	Vertical	Vertical	Vertical	Vertical
Gain	8,5 dBi	11 dBi	14 dBi	17 dBi
E-plane 3 dB beamwidth	50º	30°	15º	7,5º
H-plane 3 dB beamwidth	90º	90º	90º	90º
Electrical downtilt	None	None	None	None
Front-to-back ratio	20 dB	20 dB	20 dB	20 dB
Max. Continuous power	0,5 kW	0,5 kW	0,5 kW	0,5 kW
RF-connector	7/16 female	7/16 female	7/16 female	7/16 female
Operational windspeed	40 m/s (default)	40 m/s (default)	40 m/s (default)	40 m/s (default)
Survival windspeed	55 m/s (default)	55 m/s (default)	55 m/s (default)	55 m/s (default)
Wind area	0,1 m²	0,2 m²	0,36 m²	0,72 m²
Dimensions (HxWxD)	250x300x130 mm	650x300x130 mm	1150x300x130 mm	2210x300x130 mm
Weight	2 kg	3 kg	5 kg	9 kg
Mounting diameter	Ø 30...115 mm	Ø 30...115 mm	Ø 30...115 mm	Ø 30...115 mm
Materials	Aluminium Glassfiber radome Glass reinforced PE	Aluminium Glassfiber radome Glass reinforced PE	Aluminium Glassfiber radome Glass reinforced PE	Aluminium Glassfiber radome Glass reinforced PE
Options	-	-	-	-

Aerial Oy

Box 22
04401 Järvenpää
Finland

Tel. +358 9 2790 120
Fax +358 9 2910 210

http://www.aerial.fi
aerial@aerial.fi

DIRECTIONAL ANTENNA AV2091

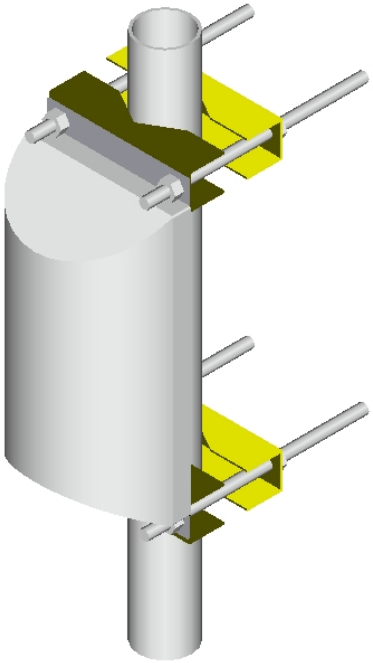

The antenna in the picture is attached to a ∅60 mm pipe with a mounting kit included in package. Antenna can also be mounted directly to wall.

Type	AV2091
Frequency	870...960 MHz
Bandwidth	90 MHz
Impedance	50 Ω DC grounded
VSWR	1,3 max
Polarisation	Vertical
Gain	9 dBi
E-plane 3 dB beamwidth	56°
H-plane 3 dB beamwidth	115°
Electrical downtilt	None
Front to back ratio	20 dB
Max. Continuous power	0,5 kW
RF-connector	N or 7/16 female
Operational windspeed	40 m/s (default)
Survival windspeed	55 m/s (default)
Wind area	0,05 m²
Dimensions (H x W x D) (∅ x H)	380 x 160 x 100 mm
Weight	0,7 kg
Mounting diameter	∅ 30...115 mm pipe
Materials	Aluminium Glassfiber radome Glass reinforced PE
Options	Colour Different connector options

Aerial Oy

Box 22
04401 Järvenpää
Finland

Tel. +358 9 2790 120
Fax +358 9 2910 210

http://www.aerial.fi
aerial@aerial.fi

DIRECTIONAL ANTENNA AV2100

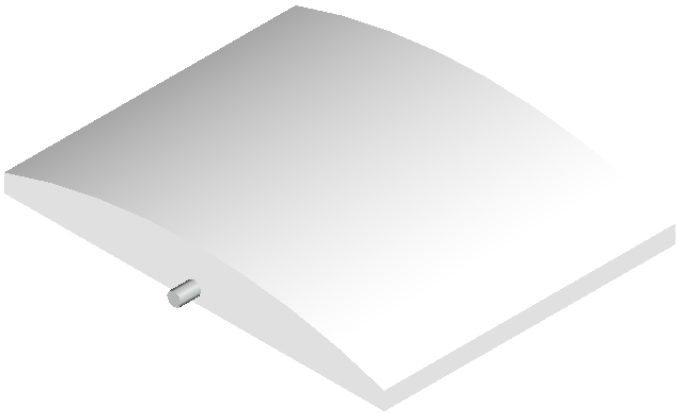

Type	AV2100
Frequency	870...960 MHz
Bandwidth	90 MHz
Impedance	50 Ω DC grounded
VSWR	1,5 max
Polarisation	Horisontal or vertical
Gain	9 dBi
E-plane 3 dB beamwidth	62°
H-plane 3 dB beamwidth	51°
Electrical downtilt	None
Front to back ratio	20 dB
Max. Continuous power	0,5 kW
RF-connector	N or 7/16 female
Operational windspeed	40 m/s (default)
Survival windspeed	55 m/s (default)
Wind area	0,17 m²
Dimensions (H x W x D)	300 x 230 x 40 mm
Weight	1,5 kg
Mounting diameter	∅ 30...115 mm pipe
Materials	Aluminium Glassfiber radome Glass reinforced PE
Options	Can be equipped with a fixed jumper cable with many different connector types. Standard version equipped with a wall mounting kit.

Aerial Oy

Box 22
04401 Järvenpää
Finland

Tel. +358 9 2790 120
Fax +358 9 2910 210

http://www.aerial.fi
aerial@aerial.fi

AV212 SERIES

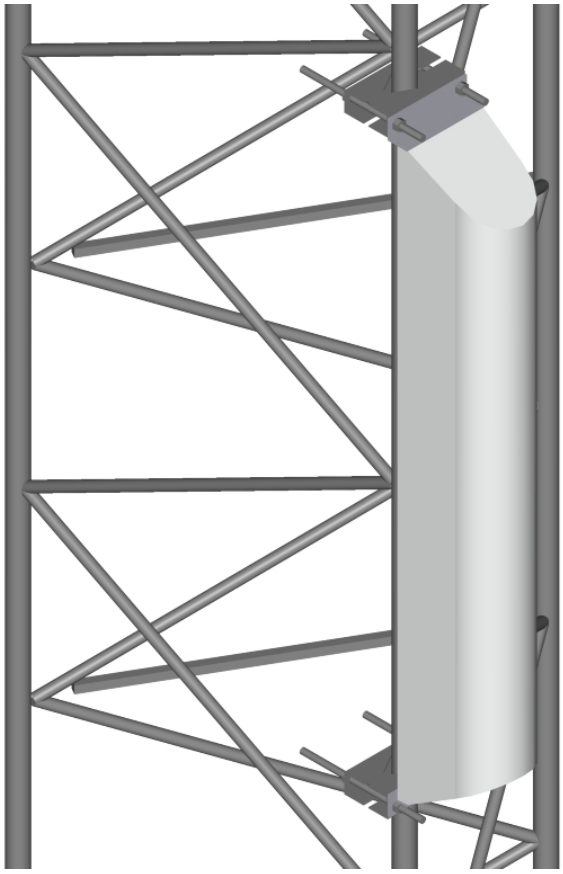

AV212 series contains four antenna alternatives for GSM 900 basestation use with 120º beamwidth.

The antenna construction includes aluminium framework, power divider and the radiating elements shielded with an UV-resistant fibreglass radome. The radome does not react on matching so the antenna maintains it's SWR performance even if covered by heavy snow and ice.

The low intermodulation values are secured by qualitative connections and precise manufacturing.

The standard inclusive (unless agreed otherwise) mounting kit provides easy installation for the tube diameters from 30 mm to 115 mm.

The durability and high performance of the AV212 series provides you a real corner-stone for your cellular network in any weather conditions.

Type	AV2120	AV2122	AV2124	AV2128
Frequency range	870...960 MHz	870...960 MHz	870...960 MHz	870...960 MHz
Bandwidth	90 MHz	90 MHz	90 MHz	90 MHz
Impedance	50Ω DC grounded	50Ω DC grounded	50Ω DC grounded	50Ω DC grounded
VSWR	1,3	1,3	1,3	1,3
Polarisation	Vertical	Vertical	Vertical	Vertical
Gain	7 dBi	10 dBi	12,5 dBi	15 dBi
E-plane 3 dB beamwidth	70º	35°	15º	7,5º
H-plane 3 dB beamwidth	120º	120º	120º	120º
Electrical downtilt	None	None	None	None
Front-to-back ratio	15 dB	15 dB	20 dB	20 dB
Max. Continuous power	0,5 kW	0,5 kW	0,5 kW	0,5 kW
RF-connector	7/16 female	7/16 female	7/16 female	7/16 female
Operational windspeed	40 m/s (default)	40 m/s (default)	40 m/s (default)	40 m/s (default)
Survival windspeed	55 m/s (default)	55 m/s (default)	55 m/s (default)	55 m/s (default)
Wind area	0,1 m²	0,15 m²	0,25 m²	0,6 m²
Dimensions (HxWxD)	250x160x110 mm	650x160x110 mm	1150x160x110 mm	2210x160x150 mm
Weight	2 kg	5 kg	7 kg	11 kg
Mounting diameter	Ø 30...115 mm	Ø 30...115 mm	Ø 30...115 mm	Ø 30...115 mm
Materials	Aluminium Glassfiber radome Glass reinforced PE	Aluminium Glassfiber radome Glass reinforced PE	Aluminium Glassfiber radome Glass reinforced PE	Aluminium Glassfiber radome Glass reinforced PE
Options	-	-	-	-

Aerial Oy

Box 22
04401 Järvenpää
Finland

Tel. +358 9 2790 120
Fax +358 9 2910 210

http://www.aerial.fi
aerial@aerial.fi

AV2X6 SERIES

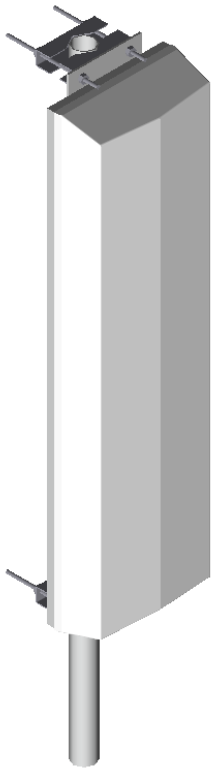

The main idea in using modern telecommunication networks should be to take out the full advantage from the system. The key to increase the network performance is to exploit diversity transmission and receiving. The most convenient solution - especially in the urban envirionment - is to use polarisation diversity.

Aerial's 2X6 SERIES GSM 900 antennas offer you that advantage. The ±45 degrees slanted element cross polarisation technique makes the antenna compact and durable with faultless electrical properties.

The antenna construction includes aluminium framework, power divider and the radiating elements shielded with an UV-resistant fibreglass radome. The radome does not react on matching so the antenna maintains it's SWR performance even if covered by heavy snow and ice.

The low intermodulation values are secured by qualitative connections and precise manufacturing.

The standard mounting kit included provides an easy installation for the tube diameters of 50...115 mm.

Type	AV2X62	AV2X64	AV2X68
Frequency	870...960 MHz	870...960 MHz	870...960 MHz
Bandwidth	90 MHz	90 MHz	90 MHz
Impedance	50 Ω DC grounded	50 Ω DC grounded	50 Ω DC grounded
VSWR	1,3 max.	1,3 max.	1,3 max.
Polarisation	±45° slanted	±45° slanted	±45° slanted
Isolation	30 dB min.	30 dB min.	30 dB min.
Gain	12,5 dBi	15,5 dBi	18,5 dBi
Horisontal 3 dB beamwidth	65°	65°	65°
Vertical 3 dB beamwidth	25°	12,5°	6,1°
Electrical downtilt	None	None	None
Front to back ratio	25 dB	25 dB	25 dB
Max. Continuous power	0,5 kW	0,5 kW	0,5 kW
RF-connector	N or 7/16 female	N or 7/16 female	N or 7/16 female
Operational windspeed	40 m/s (default)	40 m/s (default)	40 m/s (default)
Survival windspeed	55 m/s (default)	55 m/s (default)	55 m/s (default)
Wind area	0,21 m^2	0,43 m^2	0,86 m^2
Dimensions (H x W x D)	675 x 320 x175 mm	1350 x 320 x 175 mm	2700 x 320 x 175 mm
Weight	6,5 kg	10,5 kg	23,5 kg
Mounting diameter	∅ 30...115 mm pipe	∅ 30...115 mm pipe	∅ 30...115 mm pipe
Materials	Aluminium Glassfiber radome Glass reinforced PE	Aluminium Glassfiber radome Glass reinforced PE	Aluminium Glassfiber radome Glass reinforced PE
Options	-	-	-

Aerial Oy

Box 22
04401 Järvenpää
Finland

Tel. +358 9 2790 120
Fax +358 9 2910 210

http://www.aerial.fi
aerial@aerial.fi

AV2X9 SERIES

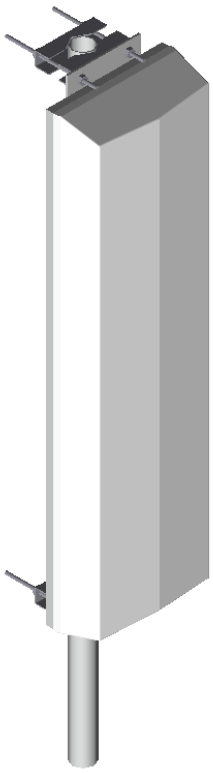

The main idea in using modern telecommunication networks should be to take out the full advantage from the system. The key to increase the network performance is to exploit diversity transmission and receiving. The most convenient solution - especially in the urban envirionment - is to use polarisation diversity.

Aerial's 2X9 SERIES GSM 900 antennas offer you that advantage. The ±45 degrees slanted element cross polarisation technique makes the antenna compact and durable with faultless electrical properties.

The antenna construction includes aluminium framework, power divider and the radiating elements shielded with an UV-resistant fibreglass radome. The radome does not react on matching so the antenna maintains it's SWR performance even if covered by heavy snow and ice.

The low intermodulation values are secured by qualitative connections and precise manufacturing.

The standard mounting kit included provides an easy installation for the tube diameters of 50...115 mm.

Type	AV2X92	AV2X94	AV2X98
Frequency	870...960 MHz	870...960 MHz	870...960 MHz
Bandwidth	90 MHz	90 MHz	90 MHz
Impedance	50 Ω DC grounded	50 Ω DC grounded	50 Ω DC grounded
VSWR	1,3 max.	1,3 max.	1,3 max.
Polarisation	±45° slanted	±45° slanted	±45° slanted
Isolation	30 dB min.	30 dB min.	30 dB min.
Gain	12,5 dBi	15,5 dBi	18,5 dBi
Horisontal 3 dB beamwidth	90°	90°	90°
Vertical 3 dB beamwidth	25°	12,5°	6,1°
Electrical downtilt	None	None	None
Front to back ratio	25 dB	25 dB	25 dB
Max. Continuous power	0,5 kW	0,5 kW	0,5 kW
RF-connector	N or 7/16 female	N or 7/16 female	N or 7/16 female
Operational windspeed	40 m/s (default)	40 m/s (default)	40 m/s (default)
Survival windspeed	55 m/s (default)	55 m/s (default)	55 m/s (default)
Wind area	0,216 m^2	0,432 m^2	0,864 m^2
Dimensions (H x W x D)	675 x 320 x750 mm	1350 x 320 x 175 mm	2700 x 320 x 175 mm
Weight	5,75 kg	11,5 kg	23 kg
Mounting diameter	∅ 30...115 mm pipe	∅ 30...115 mm pipe	∅ 30...115 mm pipe
Materials	Aluminium Glassfiber radome Glass reinforced PE	Aluminium Glassfiber radome Glass reinforced PE	Aluminium Glassfiber radome Glass reinforced PE
Options	-	-	-

Aerial Oy

Box 22
04401 Järvenpää
Finland

Tel. +358 9 2790 120
Fax +358 9 2910 210

http://www.aerial.fi
aerial@aerial.fi

SUPER GAIN SERIES

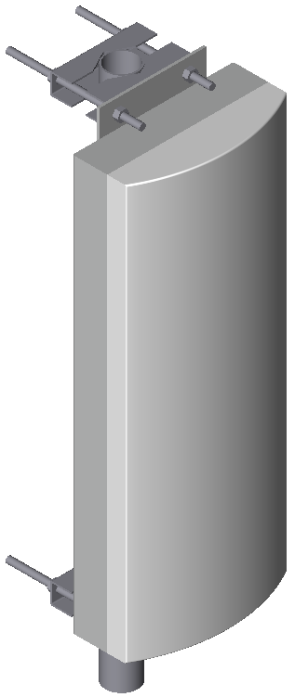

Aerial SUPER GAIN series contains three antenna alternatives for GSM 900 basestation use with 60º, 90º and 120º beamwidths.

The antenna construction includes aluminium framework, power divider and the radiating elements shielded with an UV-resistant fibreglass radome. The radome does not react on matching so the antenna maintains it's SWR performance even if covered by heavy snow and ice.

The low intermodulation values are secured by qualitative connections and precise manufacturing.

The durability and high performance of the SUPER GAIN series provides you a real corner-stone for your cellular network in any weather conditions.

Type	AV2069	AV2099	AV2129
Frequency	870...960 MHz	870...960 MHz	870...960 MHz
Bandwidth	90 MHz	90 MHz	90 MHz
Impedance	50 Ω DC grounded	50 Ω DC grounded	50 Ω DC grounded
VSWR	1,3 max.	1,3 max.	1,3 max.
Polarisation	Vertical	Vertical	Vertical
Gain	20 dBi	18 dBi	17 dBi
H-plane 3 dB beamwidth	60°	90°	120°
E-plane 3 dB beamwidth	6°	6°	6°
Electrical downtilt	None	None	None
Front to back ratio	25 dB	25 dB	20 dB
Max. Continuous power	0,5 kW	0,5 kW	0,5 kW
RF-connector	N or 7/16 female	N or 7/16 female	N or 7/16 female
Operational windspeed	40 m/s (default)	40 m/s (default)	40 m/s (default)
Survival windspeed	55 m/s (default)	55 m/s (default)	55 m/s (default)
Wind area	1,3 m^2	1,3 m^2	0,7 m^2
Dimensions (H x W x D)	2820 x 300 x 130 mm	2820 x 300 x 100 mm	2820 x 160 x 130 mm
Weight	12 kg	11 kg	18 kg
Mounting diameter	∅ 30...115 mm pipe	∅ 30...115 mm pipe	∅ 30...115 mm pipe
Materials	Aluminium Glassfiber radome Glass reinforced PE	Aluminium Glassfiber radome Glass reinforced PE	Aluminium Glassfiber radome Glass reinforced PE
Options	-	-	-

Aerial Oy

Box 22
04401 Järvenpää
Finland

Tel. +358 9 2790 120
Fax +358 9 2910 210

http://www.aerial.fi
aerial@aerial.fi

AV306 BASESTATION ANTENNA SERIES

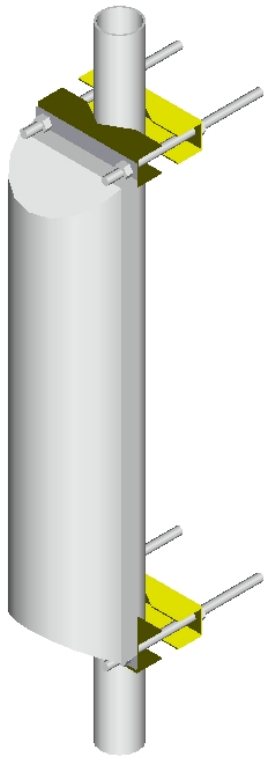

Type	AV3060	AV3062	AV3064	AV3068
Frequency	1355...1492 MHz	1355...1492 MHz	1355...1492 MHz	1355...1492 MHz
Bandwidth	137 MHz	137 MHz	137 MHz	137 MHz
Impedance	50 Ω DC grounded	50 Ω DC grounded	50 Ω DC grounded	50 Ω DC grounded
VSWR	1,5	1,3	1,3	1,3
Polarisation	Vertical	Vertical	Vertical	Vertical
Gain	9 dBi	13 dBi	16 dBi	18,5 dBi
E-plane 3 dB beamwidth	65°	28°	14°	7°
H-plane 3 dB beamwidth	65°	62°	62°	62°
Electrical downtilt	None	None	None	None
Front to back ratio	20 dB	20 dB	20 dB	20 dB
Max. Continuous power	0,5 kW	0,5 kW	0,5 kW	0,5 kW
RF-connector	7/16 female	7/16 female	7/16 female	7/16 female
Operational windspeed	40 m/s (default)	40 m/s (default)	40 m/s (default)	40 m/s (default)
Survival windspeed	55 m/s (default)	55 m/s (default)	55 m/s (default)	55 m/s (default)
Wind area	0,05 m²	0,1 m²	0,2 m²	0,4 m²
Dimensions (HxWxD)	380x160x100 mm	480x160x100 mm	740x160x100 mm	1380x160x100 mm
Weight	0,7 kg	1,7 kg	3,5 kg	6 kg
Mounting diameter	∅ 30...115 mm pipe	∅ 30...115 mm pipe	∅ 30...115 mm pipe	∅ 30...115 mm pipe
Materials	Aluminium Glassfiber radome Glass reinforced PE	Aluminium Glassfiber radome Glass reinforced PE	Aluminium Glassfiber radome Glass reinforced PE	Aluminium Glassfiber radome Glass reinforced PE
Options	-	-	-	-

Aerial Oy

Box 22
04401 Järvenpää
Finland

Tel. +358 9 2790 120
Fax +358 9 2910 210

http://www.aerial.fi
aerial@aerial.fi

AV309 BASESTATION ANTENNA SERIES

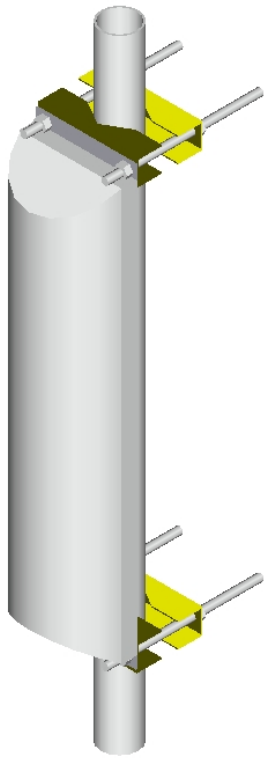

Type	AV3090	AV3092	AV3094	AV3098
Frequency	1355...1492 MHz	1355...1492 MHz	1355...1492 MHz	1355...1492 MHz
Bandwidth	137 MHz	137 MHz	137 MHz	137 MHz
Impedance	50 Ω DC grounded	50 Ω DC grounded	50 Ω DC grounded	50 Ω DC grounded
VSWR	1,3	1,3	1,3	1,3
Polarisation	Vertical	Vertical	Vertical	Vertical
Gain	8,5 dBi	11,5 dBi	14,5 dBi	17 dBi
E-plane 3 dB beamwidth	56°	28°	14°	7°
H-plane 3 dB beamwidth	92°	92°	92°	92°
Electrical downtilt	None	None	None	None
Front to back ratio	20 dB	20 dB	20 dB	20 dB
Max. Continuous power	0,5 kW	0,5 kW	0,5 kW	0,5 kW
RF-connector	7/16 female	7/16 female	7/16 female	7/16 female
Operational windspeed	40 m/s (default)	40 m/s (default)	40 m/s (default)	40 m/s (default)
Survival windspeed	55 m/s (default)	55 m/s (default)	55 m/s (default)	55 m/s (default)
Wind area	0,05 m²	0,1 m²	0,2 m²	0,4 m²
Dimensions (HxWxD)	380x160x100 mm	480x160x100 mm	740x160x100 mm	1380x160x100 mm
Weight	0,7 kg	1,7 kg	3,5 kg	6 kg
Mounting diameter	∅ 30...115 mm pipe	∅ 30...115 mm pipe	∅ 30...115 mm pipe	∅ 30...115 mm pipe
Materials	Aluminium Glassfiber radome Glass reinforced PE	Aluminium Glassfiber radome Glass reinforced PE	Aluminium Glassfiber radome Glass reinforced PE	Aluminium Glassfiber radome Glass reinforced PE
Options	-	-	-	-

Aerial Oy

Box 22
04401 Järvenpää
Finland

Tel. +358 9 2790 120
Fax +358 9 2910 210

http://www.aerial.fi
aerial@aerial.fi

AV312 BASESTATION ANTENNA SERIES

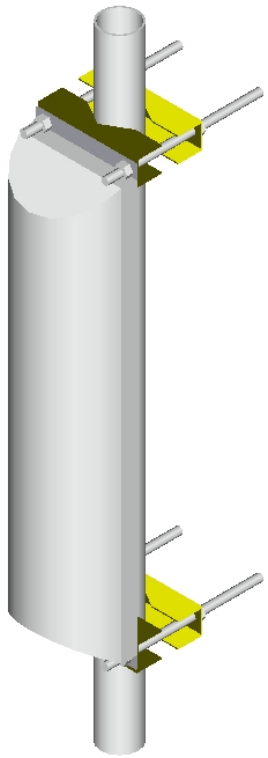

Type	AV3120	AV3122	AV3124	AV3128
Frequency	1355...1492 MHz	1355...1492 MHz	1355...1492 MHz	1355...1492 MHz
Bandwidth	137 MHz	137 MHz	137 MHz	137 MHz
Impedance	50 Ω DC grounded	50 Ω DC grounded	50 Ω DC grounded	50 Ω DC grounded
VSWR	1,3	1,3	1,3	1,3
Polarisation	Vertical	Vertical	Vertical	Vertical
Gain	7 dBi	10 dBi	13 dBi	15,5 dBi
E-plane 3 dB beamwidth	56°	28°	14°	7°
H-plane 3 dB beamwidth	115°	115°	115°	115°
Electrical downtilt	None	None	None	None
Front to back ratio	20 dB	20 dB	20 dB	20 dB
Max. Continuous power	0,5 kW	0,5 kW	0,5 kW	0,5 kW
RF-connector	7/16 female	7/16 female	7/16 female	7/16 female
Operational windspeed	40 m/s (default)	40 m/s (default)	40 m/s (default)	40 m/s (default)
Survival windspeed	55 m/s (default)	55 m/s (default)	55 m/s (default)	55 m/s (default)
Wind area	0,05 m²	0,1 m²	0,2 m²	0,4 m²
Dimensions (HxWxD)	380x160x100 mm	480x160x100 mm	740x160x100 mm	1380x160x100 mm
Weight	0,7 kg	1,7 kg	3,5 kg	6 kg
Mounting diameter	∅ 30...115 mm pipe	∅ 30...115 mm pipe	∅ 30...115 mm pipe	∅ 30...115 mm pipe
Materials	Aluminium Glassfiber radome Glass reinforced PE	Aluminium Glassfiber radome Glass reinforced PE	Aluminium Glassfiber radome Glass reinforced PE	Aluminium Glassfiber radome Glass reinforced PE
Options	-	-	-	-

Aerial Oy

Box 22
04401 Järvenpää
Finland

Tel. +358 9 2790 120
Fax +358 9 2910 210

http://www.aerial.fi
aerial@aerial.fi

SHORT BACKFIRE ANTENNA AV4601

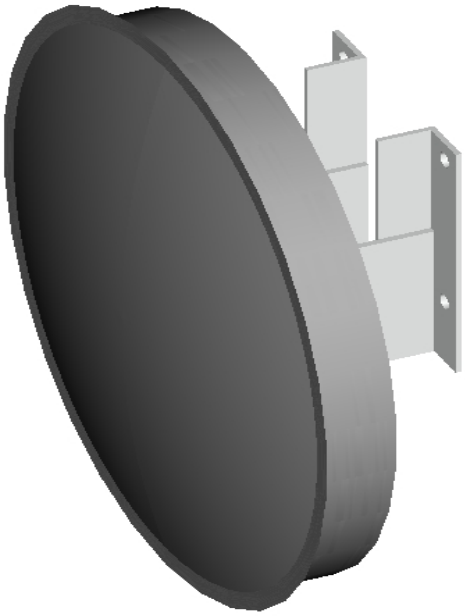

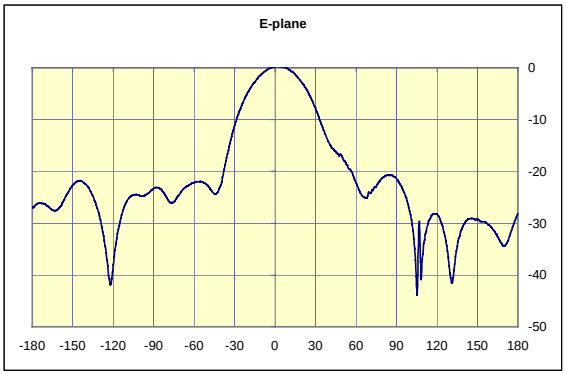

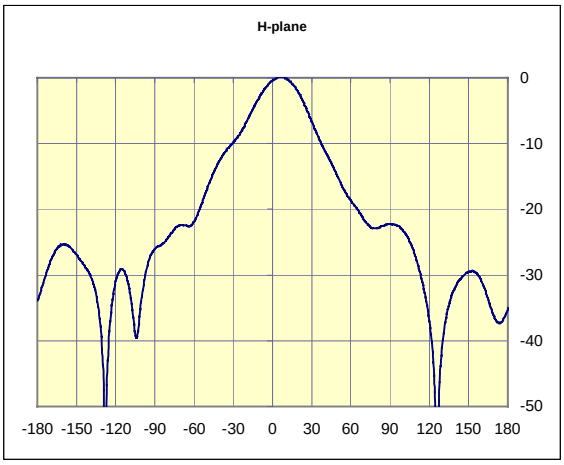

Type	AV4601
Frequency	1,375...1444 GHz
Bandwidth	69 MHz
Impedance	50 Ω
VSWR	1,5 max
Polarisation	Horisontal or Vertical
Gain	15 dBi
E-plane 3 dB beamwidth	36°
H-plane 3 dB beamwidth	32°
Electrical downtilt	None
Front to back ratio	30 dB
Max. Continuous power	0,5 kW
RF-connector	N or 7/16 female
Operational windspeed	40 m/s (default)
Survival windspeed	55 m/s (default)
Wind area	0,2 m²
Dimensions (H x W x D) (∅ x H)	470 x 190 mm
Weight	5 kg
Mounting diameter	∅ 30...115 mm pipe
Materials	Aluminium Glassfiber radome Glass reinforced PE
Options	-

Aerial Oy
Box 22
04401 Järvenpää
Finland
Tel. +358 9 2790 120
Fax +358 9 2910 210
http://www.aerial.fi
aerial@aerial.fi

SHORT BACKFIRE ANTENNA AV6501

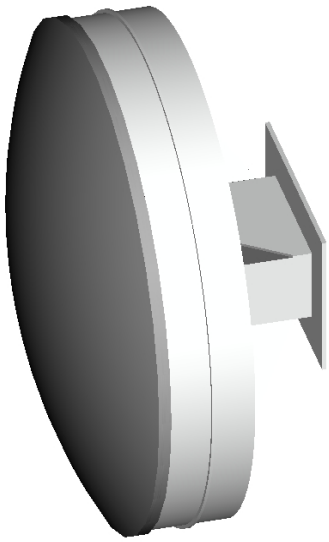

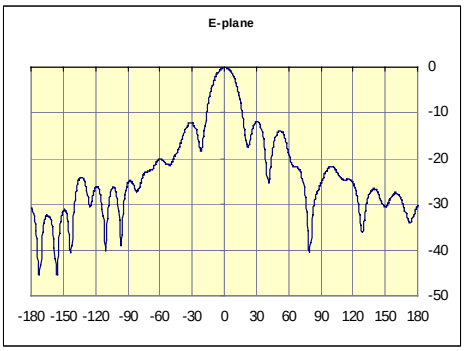

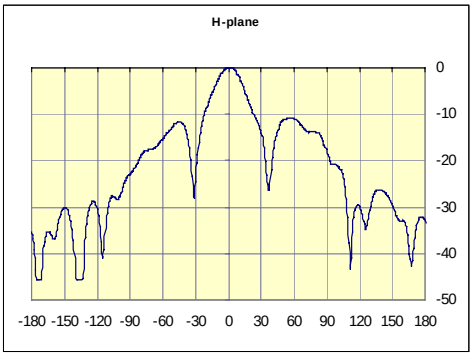

Type	AV6501
Frequency	1,375...1,444 GHz
Bandwidth	69 MHz
Impedance	50 Ω
VSWR	1,5 max
Polarisation	Horisontal or Vertical
Gain	18 dBi
E-plane 3 dB beamwidth	20°
H-plane 3 dB beamwidth	25°
Electrical downtilt	None
Front to back ratio	30 dB
Max. Continuous power	0,5 kW
RF-connector	N or 7/16 female
Operational windspeed	40 m/s (default)
Survival windspeed	55 m/s (default)
Wind area	0,4 m²
Dimensions (H x W x D) (∅ x H)	680 x 330 mm
Weight	11 kg
Mounting diameter	∅ 30...115 mm pipe
Materials	Aluminium Glassfiber radome Glass reinforced PE
Options	-

Aerial Oy

Box 22
04401 Järvenpää
Finland

Tel. +358 9 2790 120
Fax +358 9 2910 210

http://www.aerial.fi
aerial@aerial.fi

HORN ANTENNAS AH8/1,4 AND AH10/1,4 AND AH15/1,4

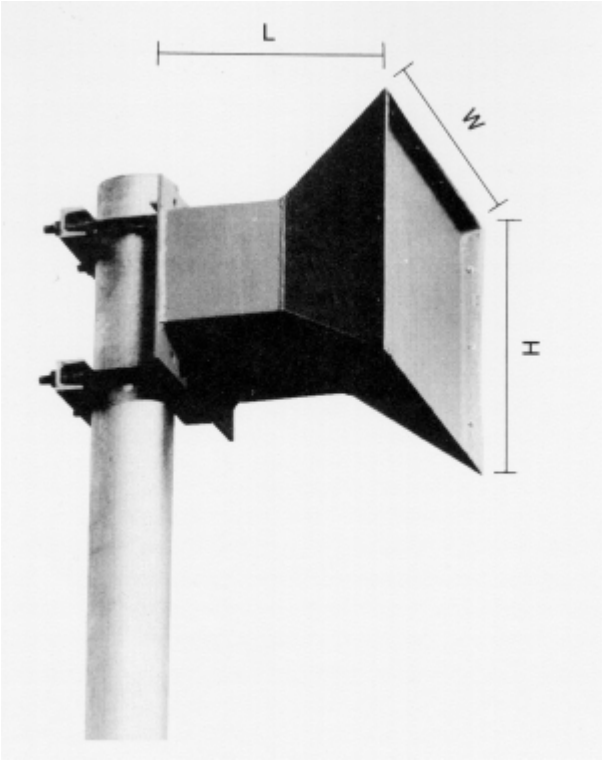

Type	AH8/1,4	AH10/1,4	AH15/1,4
Frequency	1,35...1,55 GHz	1,35...1,55 GHz	1,35...1,55 GHz
Bandwidth	0,2 GHz	0,2 GHz	0,2 GHz
Impedance	50 Ω	50 Ω	50 Ω
VSWR	1,5 max, 1,3 typical	1,5 max, 1,3 typical	1,5 max, 1,3 typical
Polarisation	Horisontal or vertical	Horisontal or vertical	Horisontal or vertical
Gain	8 dBi	10 dBi	15 dBi
E-plane 3 dB beamwidth	75°	60°	30°
H-plane 3 dB beamwidth	75°	60°	30°
Electrical downtilt	None	None	None
Front to back ratio	20 dB	20 dB	20 dB
Max. Continuous power	0,5 kW	0,5 kW	0,5 kW
RF-connector	N or 7/16 female	N or 7/16 female	N or 7/16 female
Operational windspeed	40 m/s (default)	40 m/s (default)	40 m/s (default)
Survival windspeed	55 m/s (default)	55 m/s (default)	55 m/s (default)
Wind area	0,1 m²	0,125 m²	0,25 m²
Dimensions (HxWxD)	140x140x200 mm	250x250x300 mm	500x500x450 mm
Weight	1,5 kg	2,5 kg	4 kg
Mounting diameter	∅ 30…115 mm pipe	∅ 30…115 mm pipe	∅ 30…115 mm pipe
Materials	Aluminium Glassfiber radome Glass reinforced PE	Aluminium Glassfiber radome Glass reinforced PE	Aluminium Glassfiber radome Glass reinforced PE
Options	-	-	-

Aerial Oy
Box 22
04401 Järvenpää
Finland
Tel. +358 9 2790 120
Fax +358 9 2910 210
http://www.aerial.fi
aerial@aerial.fi

AV106 BASESTATION ANTENNA SERIES

AV106 AV109 and AV112 series contain excellent basestation antenna solutions for GSM 1800 and DECT networks. The -3 dB beamwidths are 60º, 90º and 120º. Every group provides four gain alternatives.

The antenna construction includes aluminium framework, power divider and the radiating elements shielded with an UV-resistant fibreglass radome.

The radome does not react on matching so the antenna maintains it's performance even if covered by heavy snow and ice.

The low intermodulation values are secured by qualitative connections and precise manufacturing.

The standard inclusive mounting kit provides an easy installation for the tube diameters from 30 mm to 115 mm.

Type	AV1060	AV1062	AV1064	AV1068
Frequency	1710...1900 MHz	1710...1900 MHz	1710...1900 MHz	1710...1900 MHz
Bandwidth	190 MHz	190 MHz	190 MHz	190 MHz
Impedance	50 Ω DC grounded	50 Ω DC grounded	50 Ω DC grounded	50 Ω DC grounded
VSWR	1,3	1,3	1,3	1,3
Polarisation	Vertical	Vertical	Vertical	Vertical
Gain	10 dBi	13 dBi	16 dBi	18,5 dBi
E-plane 3 dB beamwidth	56°	28°	14°	7°
H-plane 3 dB beamwidth	62°	62°	62°	62°
Electrical downtilt	None	None	None	None
Front to back ratio	20 dB	20 dB	20 dB	20 dB
Max. Continuous power	0,5 kW	0,5 kW	0,5 kW	0,5 kW
RF-connector	7/16 or N female	7/16 or N female	7/16 or N female	7/16 or N female
Operational windspeed	40 m/s (default)	40 m/s (default)	40 m/s (default)	40 m/s (default)
Survival windspeed	55 m/s (default)	55 m/s (default)	55 m/s (default)	55 m/s (default)
Wind area	0,05 m²	0,1 m²	0,2 m²	0,4 m²
Dimensions (HxWxD)	175x160x50 mm	350x160x50 mm	700x160x50 mm	1400x160x50 mm
Weight	0,5 kg	0,85 kg	1,7 kg	3,4 kg
Mounting diameter	∅ 30...115 mm pipe	∅ 30...115 mm pipe	∅ 30...115 mm pipe	∅ 30...115 mm pipe
Materials	Aluminium Glassfiber radome Glass reinforced PE	Aluminium Glassfiber radome Glass reinforced PE	Aluminium Glassfiber radome Glass reinforced PE	Aluminium Glassfiber radome Glass reinforced PE
Options	-	-	-	-

Aerial Oy
Box 22
04401 Järvenpää
Finland
Tel. +358 9 2790 120
Fax +358 9 2910 210
http://www.aerial.fi
aerial@aerial.fi

AV109 BASESTATION ANTENNA SERIES

AV106 AV109 and AV112 series contain excellent basestation antenna solutions for GSM 1800 and DECT networks. The -3 dB beamwidths are 60º, 90º and 120º. Every group provides four gain alternatives.

The antenna construction includes aluminium framework, power divider and the radiating elements shielded with an UV-resistant fibreglass radome.

The radome does not react on matching so the antenna maintains it's performance even if covered by heavy snow and ice.

The low intermodulation values are secured by qualitative connections and precise manufacturing.

The standard inclusive mounting kit provides an easy installation for the tube diameters from 30 mm to 115 mm.

Type	AV1090	AV1092	AV1094	AV1098
Frequency	1710...1900 MHz	1710...1900 MHz	1710...1900 MHz	1710...1900 MHz
Bandwidth	190 MHz	190 MHz	190 MHz	190 MHz
Impedance	50 Ω DC grounded	50 Ω DC grounded	50 Ω DC grounded	50 Ω DC grounded
VSWR	1,3	1,3	1,3	1,3
Polarisation	Vertical	Vertical	Vertical	Vertical
Gain	8,5 dBi	11,5 dBi	14,5 dBi	17 dBi
E-plane 3 dB beamwidth	56°	28°	14°	7°
H-plane 3 dB beamwidth	92°	92°	92°	92°
Electrical downtilt	None	None	None	None
Front to back ratio	20 dB	20 dB	20 dB	20 dB
Max. Continuous power	0,5 kW	0,5 kW	0,5 kW	0,5 kW
RF-connector	7/16 or N female	7/16 or N female	7/16 or N female	7/16 or N female
Operational windspeed	40 m/s (default)	40 m/s (default)	40 m/s (default)	40 m/s (default)
Survival windspeed	55 m/s (default)	55 m/s (default)	55 m/s (default)	55 m/s (default)
Wind area	0,05 m²	0,1 m²	0,2 m²	0,4 m²
Dimensions (HxWxD)	175x160x50 mm	350x160x50 mm	700x160x50 mm	1400x160x50 mm
Weight	0,5 kg	0,85 kg	1,7 kg	3,4 kg
Mounting diameter	∅ 30...115 mm pipe	∅ 30...115 mm pipe	∅ 30...115 mm pipe	∅ 30...115 mm pipe
Materials	Aluminium Glassfiber radome Glass reinforced PE	Aluminium Glassfiber radome Glass reinforced PE	Aluminium Glassfiber radome Glass reinforced PE	Aluminium Glassfiber radome Glass reinforced PE
Options	-	-	-	-

Aerial Oy
Box 22
04401 Järvenpää
Finland
Tel. +358 9 2790 120
Fax +358 9 2910 210
http://www.aerial.fi
aerial@aerial.fi

AV109-DUAL BASESTATION ANTENNA SERIES

AV109-DUAL series contains four antenna alternatives for both GSM 1800 and UMTS basestation use with 90º beamwidth.

The antenna construction includes aluminium framework, power divider and the radiating elements shielded with an UV-resistant fibreglass radome. The radome does not react on matching so the antenna maintains it's SWR performance even if covered by heavy snow and ice.

The low intermodulation values are secured by qualitative connections and precise manufacturing.

The standard inclusive (unless agreed otherwise) mounting kit provides easy installation for the tube diameters from 30 mm to 115 mm.

The durability and high performance of the AV109 series provides you a real corner-stone for your cellular network in any weather conditions.

Type	AV1090-DUAL	AV1092-DUAL	AV1094-DUAL	AV1098-DUAL
Frequency range	1710...2170 MHz	1710...2170 MHz	1710...2170 MHz	1710...2170 MHz
Bandwidth	460 MHz	460 MHz	460 MHz	460 MHz
Impedance	50Ω DC grounded	50Ω DC grounded	50Ω DC grounded	50Ω DC grounded
VSWR	1,5	1,5	1,5	1,5
Polarisation	Vertical	Vertical	Vertical	Vertical
Gain	8,5 dBi	11,5 dBi	14,5 dBi	17 dBi
E-plane 3 dB beamwidth	50º	30°	15º	7,5º
H-plane 3 dB beamwidth	90º	90º	90º	90º
Electrical downtilt	None	None	None	None
Front-to-back ratio	20 dB	20 dB	20 dB	20 dB
Max. Continuous power	0,5 kW	0,5 kW	0,5 kW	0,5 kW
RF-connector	7/16 female	7/16 female	7/16 female	7/16 female
Operational windspeed	40 m/s (default)	40 m/s (default)	40 m/s (default)	40 m/s (default)
Survival windspeed	55 m/s (default)	55 m/s (default)	55 m/s (default)	55 m/s (default)
Wind area	0,05 m²	0,1 m²	0,2 m²	0,4 m²
Dimensions (HxWxD)	175x160x90 mm	350x160x90 mm	700x160x90 mm	1400x160x90 mm
Weight	0,5 kg	0,85 kg	1,7 kg	3,4 kg
Mounting diameter	Ø 30...115 mm	Ø 30...115 mm	Ø 30...115 mm	Ø 30...115 mm
Materials	Aluminium Glassfiber radome Glass reinforced PE	Aluminium Glassfiber radome Glass reinforced PE	Aluminium Glassfiber radome Glass reinforced PE	Aluminium Glassfiber radome Glass reinforced PE
Options	-	-	-	-

Aerial Oy
Box 22
04401 Järvenpää
Finland
Tel. +358 9 2790 120
Fax +358 9 2910 210
http://www.aerial.fi
aerial@aerial.fi

GSM 1800 INDOOR ANTENNA AV1100

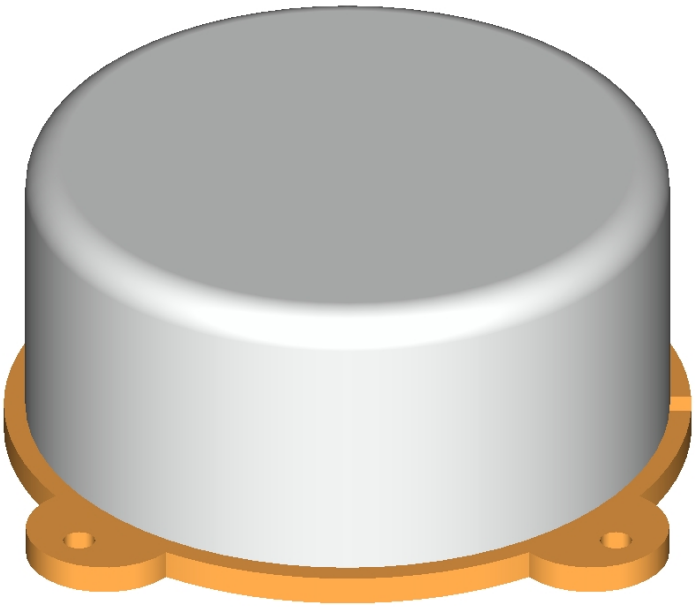

Type	AV1100
Frequency	1710...1880 MHz
Bandwidth	170 MHz
Impedance	50 Ω DC grounded
VSWR	1,5
Polarisation	Vertical or horisontal
Gain	6 dBi
E-plane 3 dB beamwidth	70°
H-plane 3 dB beamwidth	100°
Electrical downtilt	None
Front to back ratio	15 dB
Max. Continuous power	50 W
RF-connector	N female
Operational windspeed	40 m/s (default)
Survival windspeed	55 m/s (default)
Wind area	0,005 m²
Dimensions (∅xH)	100x48 mm
Weight	0,2 kg
Mounting	Wall / ceiling
Materials	Aluminium Glassfiber radome Glass reinforced PE
Options	Colour

Aerial Oy

Box 22
04401 Järvenpää
Finland

Tel. +358 9 2790 120
Fax +358 9 2910 210

http://www.aerial.fi
aerial@aerial.fi

AV112 BASESTATION ANTENNA SERIES

AV106 AV109 and AV112 series contain excellent basestation antenna solutions for GSM 1800 and DECT networks. The -3 dB beamwidths are 60º, 90º and 120º. Every group provides four gain alternatives.

The antenna construction includes aluminium framework, power divider and the radiating elements shielded with an UV-resistant fibreglass radome.

The radome does not react on matching so the antenna maintains it's performance even if covered by heavy snow and ice.

The low intermodulation values are secured by qualitative connections and precise manufacturing.

The standard inclusive mounting kit provides an easy installation for the tube diameters from 30 mm to 115 mm.

Type	AV1120	AV1122	AV1124	AV1128
Frequency	1710...1900 MHz	1710...1900 MHz	1710...1900 MHz	1710...1900 MHz
Bandwidth	190 MHz	190 MHz	190 MHz	190 MHz
Impedance	50 Ω DC grounded	50 Ω DC grounded	50 Ω DC grounded	50 Ω DC grounded
VSWR	1,3	1,3	1,3	1,3
Polarisation	Vertical	Vertical	Vertical	Vertical
Gain	7 dBi	10 dBi	13 dBi	15,5 dBi
E-plane 3 dB beamwidth	56°	28°	14°	7°
H-plane 3 dB beamwidth	115°	115°	115°	115°
Electrical downtilt	None	None	None	None
Front to back ratio	20 dB	20 dB	20 dB	20 dB
Max. Continuous power	0,5 kW	0,5 kW	0,5 kW	0,5 kW
RF-connector	7/16 or N female	7/16 or N female	7/16 or N female	7/16 or N female
Operational windspeed	40 m/s (default)	40 m/s (default)	40 m/s (default)	40 m/s (default)
Survival windspeed	55 m/s (default)	55 m/s (default)	55 m/s (default)	55 m/s (default)
Wind area	0,05 m²	0,1 m²	0,2 m²	0,4 m²
Dimensions (HxWxD)	175x160x50 mm	350x160x50 mm	700x160x50 mm	1400x160x50 mm
Weight	0,5 kg	0,85 kg	1,7 kg	3,4 kg
Mounting diameter	∅ 30...115 mm pipe	∅ 30...115 mm pipe	∅ 30...115 mm pipe	∅ 30...115 mm pipe
Materials	Aluminium Glassfiber radome Glass reinforced PE	Aluminium Glassfiber radome Glass reinforced PE	Aluminium Glassfiber radome Glass reinforced PE	Aluminium Glassfiber radome Glass reinforced PE
Options	-	-	-	-

Aerial Oy
Box 22
04401 Järvenpää
Finland
Tel. +358 9 2790 120
Fax +358 9 2910 210
http://www.aerial.fi
aerial@aerial.fi

SHORT BACKFIRE ANTENNA AV4802

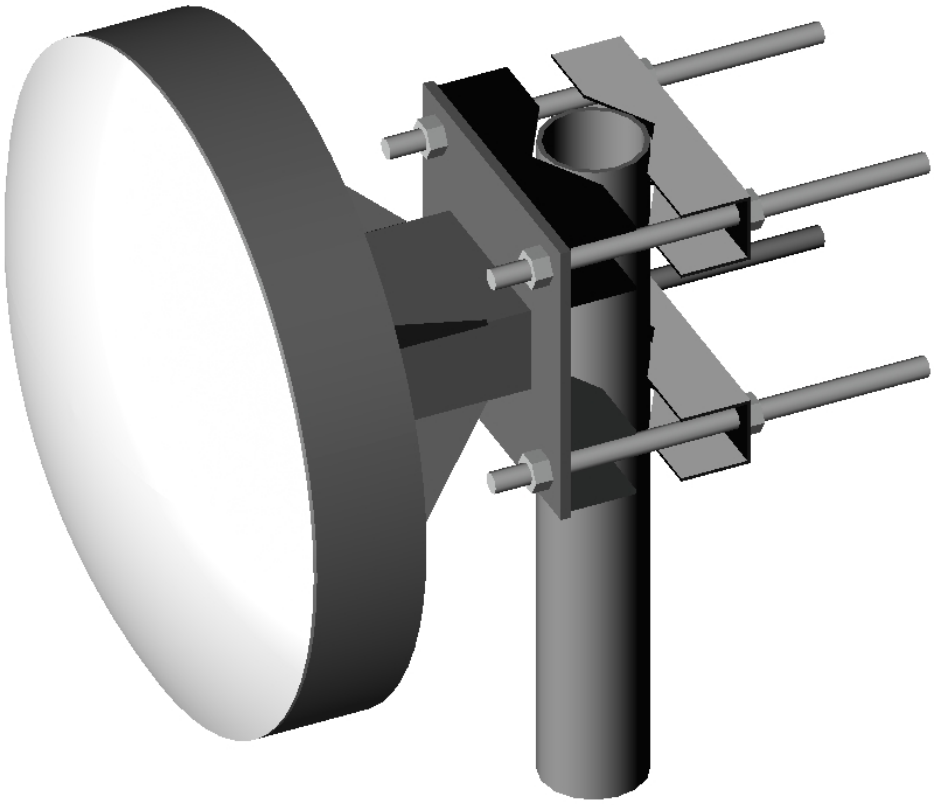

Type	AV4802
Frequency	1735...1840 MHz
Bandwidth	105 MHz
Impedance	50 Ω
VSWR	1,5 max
Polarisation	Vertical or horisontal
Gain	18 dBi
E-plane 3 dB beamwidth	19°
H-plane 3 dB beamwidth	19°
Electrical downtilt	None
Front to back ratio	30 dB
Max. Continuous power	0,5 kW
RF-connector	7/16 or N female
Operational windspeed	40 m/s (default)
Survival windspeed	55 m/s (default)
Wind area	0,17 m²
Dimensions (∅xH)	520x200 mm
Weight	5 kg
Mounting diameter	∅ 30...115 mm pipe
Materials	Aluminium Glassfiber radome Glass reinforced PE
Options	Colour

Aerial Oy

Box 22
04401 Järvenpää
Finland

Tel. +358 9 2790 120
Fax +358 9 2910 210

http://www.aerial.fi
aerial@aerial.fi

AV5020 DIRECTIONAL UMTS ANTENNA

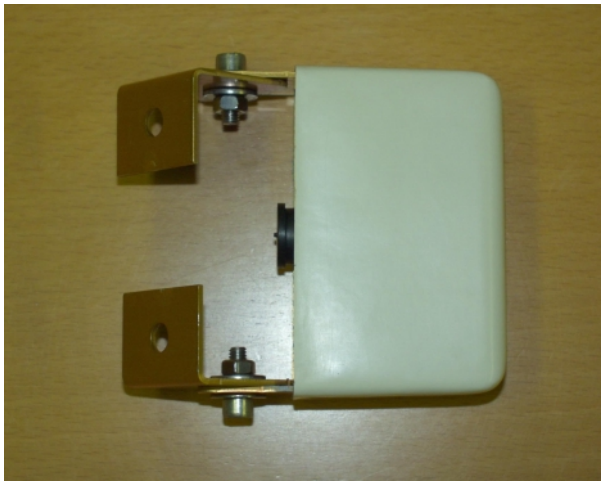

Type	AV5020
Frequency	1920 MHz...2170 MHz *
Bandwidth	250 MHz
Impedance	50 Ω DC grounded
VSWR	1,5 typical
Polarisation	Horisontal or vertical
Gain	4-6 dBi
E-plane 3 dB beamwidth	80°
H-plane 3 dB beamwidth	120°
Front to back ratio	10-15 dB
Max. Continuous power	0,5 kW
RF-connector	N-female
Wind area	0,006 m²
Dimensions (HxWxD)	100x40x60
Weight	0,2 kg
Mounting diameter	Wall mount included
Materials	Aluminium Glassfiber radome Glass reinforced PE
Options	Colour

* 1920...1980 MHz, 2110...2170 MHz

Aerial Oy

Box 22
04401 Järvenpää
Finland

Tel. +358 9 2790 120
Fax +358 9 2910 210

http://www.aerial.fi
aerial@aerial.fi

AV506 UMTS BASESTATION ANTENNA SERIES
- Preliminary datasheet -

Type	AV5060	AV5062	AV5064	AV5068
Frequency	1920...2170 MHz * 1710...2170 MHz**	1920...2170 MHz * 1710...2170 MHz**	1920...2170 MHz * 1710...2170 MHz**	1920...2170 MHz * 1710...2170 MHz**
Bandwidth	250 MHz * 460 MHz **	250 MHz 460 MHz	250 MHz 460 MHz	250 MHz 460 MHz
Impedance	50 Ω DC grounded	50 Ω DC grounded	50 Ω DC grounded	50 Ω DC grounded
VSWR	1,5 max	1,5 max	1,5 max	1,5 max
Polarisation	Vertical	Vertical	Vertical	Vertical
Gain	9 dBi	12 dBi	15 dBi	18 dBi
E-plane 3 dB beamwidth	60°	30°	15°	7°
H-plane 3 dB beamwidth	60°	60°	60°	60°
Electrical downtilt	None	None	None	None
Front to back ratio	25 dB	25 dB	25 dB	25 dB
Max. Continuous power	0,5 kW	0,5 kW	0,5 kW	0,5 kW
RF-connector	7/16 female	7/16 female	7/16 female	7/16 female
Operational windspeed	40 m/s (default)	40 m/s (default)	40 m/s (default)	40 m/s (default)
Survival windspeed	55 m/s (default)	55 m/s (default)	55 m/s (default)	55 m/s (default)
Wind area	0,07 m²	0,1 m²	0,17 m²	0,24 m²
Dimensions (HxWxD)	300x160x50 mm	400x160x50 mm	700x160x50 mm	1000x160x50 mm
Weight	1,2 kg	2 kg	3 kg	5 kg
Mounting diameter	∅ 30...115 mm pipe	∅ 30...115 mm pipe	∅ 30...115 mm pipe	∅ 30...115 mm pipe
Materials	Aluminium Glassfiber radome Glass reinforced PE	Aluminium Glassfiber radome Glass reinforced PE	Aluminium Glassfiber radome Glass reinforced PE	Aluminium Glassfiber radome Glass reinforced PE
Options	-	-	-	-

* 1920...1980 MHz and 2110...2170 MHz
** 1920...1980 MHz, 2110...2170 MHz and 1710...1880 MHz

Aerial Oy
Box 22
04401 Järvenpää
Finland
Tel. +358 9 2790 120
Fax +358 9 2910 210
http://www.aerial.fi
aerial@aerial.fi

AV512 UMTS BASESTATION ANTENNA SERIES
-Preliminary datasheet

Type	AV5120	AV5122	AV5124	AV5128
Frequency	1920...2170 MHz * 1710...2170 MHz**	1920...2170 MHz * 1710...2170 MHz**	1920...2170 MHz * 1710...2170 MHz**	1920...2170 MHz * 1710...2170 MHz**
Bandwidth	250 MHz * 460 MHz **	250 MHz * 460 MHz **	250 MHz * 460 MHz **	250 MHz * 460 MHz **
Impedance	50 Ω DC grounded	50 Ω DC grounded	50 Ω DC grounded	50 Ω DC grounded
VSWR	1,3 max	1,3 max	1,3 max	1,3 max
Polarisation	Vertical	Vertical	Vertical	Vertical
Gain	7 dBi	10 dBi	13 dBi	15,5 dBi
E-plane 3 dB beamwidth	56°	28°	14°	7°
H-plane 3 dB beamwidth	115°	115°	115°	115°
Electrical downtilt	None	None	None	None
Front to back ratio	20 dB	20 dB	20 dB	20 dB
Max. Continuous power	0,5 kW	0,5 kW	0,5 kW	0,5 kW
RF-connector	7/16 or N female	7/16 or N female	7/16 or N female	7/16 or N female
Operational windspeed	40 m/s (default)	40 m/s (default)	40 m/s (default)	40 m/s (default)
Survival windspeed	55 m/s (default)	55 m/s (default)	55 m/s (default)	55 m/s (default)
Wind area	0,05 m²	0,1 m²	0,2 m²	0,4 m²
Dimensions (HxWxD)	155x140x100 mm	310x140x100 mm	620x140x100 mm	1230x140x100 mm
Weight	0,5 kg	0,85 kg	1,7 kg	3,4 kg
Mounting diameter	∅ 30...115 mm pipe	∅ 30...115 mm pipe	∅ 30...115 mm pipe	∅ 30...115 mm pipe
Materials	Aluminium Glassfiber radome Glass reinforced PE	Aluminium Glassfiber radome Glass reinforced PE	Aluminium Glassfiber radome Glass reinforced PE	Aluminium Glassfiber radome Glass reinforced PE
Options	-	-	-	-

* 1920...1980 MHz and 2110...2170 MHz
** 1920...1980 MHz, 2110...2170 MHz and 1710...1880 MHz

Aerial Oy
Box 22
04401 Järvenpää
Finland
Tel. +358 9 2790 120
Fax +358 9 2910 210
http://www.aerial.fi
aerial@aerial.fi

AV543 OMNIDIRECTIONAL UMTS BASESTATION ANTENNA SERIES

Type	AV5430	AV5432	AV5438
Frequency	1710…2170 MHz *	1710…2170 MHz *	1710…2170 MHz *
Bandwidth	460 MHz*	460 MHz*	460 MHz*
Impedance	50 Ω DC grounded	50 Ω DC grounded	50 Ω DC grounded
VSWR	1,5	1,5	1,5
Polarisation	Vertical	Vertical	Vertical
Gain	2 dBi	5 dBi	8 dBi
E-plane 3 dB beamwidth	60°	30°	15°
H-plane 3 dB beamwidth	360°	360°	360°
Electrical downtilt	None	None	None
Front to back ratio	-	-	-
Max. Continuous power	200 W or 500 W	200 W or 500 W	200 W or 500 W
RF-connector	N or 7/16 female	N or 7/16 female	N or 7/16 female
Operational windspeed	40 m/s (default)	40 m/s (default)	40 m/s (default)
Survival windspeed	55 m/s (default)	55 m/s (default)	55 m/s (default)
Wind area	0,04 m²	0,05 m²	0,08 m²
Dimensions (∅xH)	86x350 mm	86x500 mm	86x820 mm
Weight	1,5 kg	3,3 kg	5 kg
Mounting diameter	∅ 30…115 mm pipe	∅ 30…115 mm pipe	∅ 30…115 mm pipe
Materials	Aluminium Glassfiber radome Glass reinforced PE	Aluminium Glassfiber radome Glass reinforced PE	Aluminium Glassfiber radome Glass reinforced PE
Options	-	-	-

1920...1980 MHz AND 2110...2170 MHz
OR
1710...1880 MHz, 1920...1980 MHz AND 2110...2170 MHz

Aerial Oy

Box 22
04401 Järvenpää
Finland

Tel. +358 9 2790 120
Fax +358 9 2910 210

http://www.aerial.fi
aerial@aerial.fi

AV5X6 UMTS BASESTATION ANTENNA SERIES
- Preliminary datasheet -

Type	AV5X60	AV5X62	AV5X64	AV5X68
Frequency	1920...2170 MHz * 1710...2170 MHz **	1920...2170 MHz * 1710...2170 MHz **	1920...2170 MHz * 1710...2170 MHz **	1920...2170 MHz * 1710...2170 MHz **
Bandwidth	250 MHz * 460 MHz **	250 MHz * 460 MHz **	250 MHz * 460 MHz **	250 MHz * 460 MHz **
Impedance	50 Ω DC grounded	50 Ω DC grounded	50 Ω DC grounded	50 Ω DC grounded
VSWR	1,5 max	1,5 max	1,5 max	1,5 max
Polarisation	Slanted ±45˚	Slanted ±45˚	Slanted ±45˚	Slanted ±45˚
Gain	9 dBi	12 dBi	15 dBi	18 dBi
E-plane 3 dB beamwidth	60°	30°	15°	7°
H-plane 3 dB beamwidth	60°	60°	60°	60°
Electrical downtilt	None	None	None	None
Front to back ratio	25 dB	25 dB	25 dB	25 dB
Max. Continuous power	0,5 kW	0,5 kW	0,5 kW	0,5 kW
RF-connector	2x7/16 female	2x7/16 female	2x7/16 female	2x7/16 female
Operational windspeed	40 m/s (default)	40 m/s (default)	40 m/s (default)	40 m/s (default)
Survival windspeed	55 m/s (default)	55 m/s (default)	55 m/s (default)	55 m/s (default)
Wind area	0,07 m²	0,1 m²	0,17 m²	0,24 m²
Dimensions (HxWxD)	350x250x100 mm	450x250x100 mm	750x250x100 mm	1500x250x100 mm
Weight	2 kg	4 kg	8 kg	13 kg
Mounting diameter	∅ 30...115 mm pipe	∅ 30...115 mm pipe	∅ 30...115 mm pipe	∅ 30...115 mm pipe
Materials	Aluminium Glassfiber radome Glass reinforced PE	Aluminium Glassfiber radome Glass reinforced PE	Aluminium Glassfiber radome Glass reinforced PE	Aluminium Glassfiber radome Glass reinforced PE
Options	Downtilt	Downtilt	Downtilt	Downtilt

* 1920...1980 MHz and 2110...2170 MHz
** 1920...1980 MHz, 2110...2170 MHz and 1710...1880 MHz

Aerial Oy
Box 22
04401 Järvenpää
Finland
Tel. +358 9 2790 120
Fax +358 9 2910 210
http://www.aerial.fi
aerial@aerial.fi

AV5X9 UMTS BASESTATION ANTENNA SERIES
- Preliminary datasheet -

Type	AV5X90	AV5X92	AV5X94	AV5X98
Frequency	1920...2170 MHz * 1710...2170 MHz **	1920...2170 MHz * 1710...2170 MHz **	1920...2170 MHz * 1710...2170 MHz **	1920...2170 MHz * 1710...2170 MHz **
Bandwidth	250 MHz * 460 MHz **	250 MHz * 460 MHz **	250 MHz * 460 MHz **	250 MHz * 460 MHz **
Impedance	50 Ω DC grounded	50 Ω DC grounded	50 Ω DC grounded	50 Ω DC grounded
VSWR	1,5 max	1,5 max	1,5 max	1,5 max
Polarisation	Slanted ±45˚	Slanted ±45˚	Slanted ±45˚	Slanted ±45˚
Gain	7 dBi	9 dBi	13 dBi	15 dBi
E-plane 3 dB beamwidth	60°	30°	15°	7°
H-plane 3 dB beamwidth	90°	90°	90°	90°
Electrical downtilt	None	None	None	None
Front to back ratio	25 dB	25 dB	25 dB	25 dB
Max. Continuous power	0,5 kW	0,5 kW	0,5 kW	0,5 kW
RF-connector	2x7/16 female	2x7/16 female	2x7/16 female	2x7/16 female
Operational windspeed	40 m/s (default)	40 m/s (default)	40 m/s (default)	40 m/s (default)
Survival windspeed	55 m/s (default)	55 m/s (default)	55 m/s (default)	55 m/s (default)
Wind area	0,07 m²	0,1 m²	0,17 m²	0,24 m²
Dimensions (HxWxD)	350x200x100 mm	450x200x100 mm	750x200x100 mm	1500x200x100 mm
Weight	2 kg	4 kg	8 kg	13 kg
Mounting diameter	∅ 30...115 mm pipe	∅ 30...115 mm pipe	∅ 30...115 mm pipe	∅ 30...115 mm pipe
Materials	Aluminium Glassfiber radome Glass reinforced PE	Aluminium Glassfiber radome Glass reinforced PE	Aluminium Glassfiber radome Glass reinforced PE	Aluminium Glassfiber radome Glass reinforced PE
Options	Downtilt	Downtilt	Downtilt	Downtilt

* 1920...1980 MHz and 2110...2170 MHz
** 1920...1980 MHz, 2110...2170 MHz and 1710...1880 MHz

Aerial Oy
Box 22
04401 Järvenpää
Finland
Tel. +358 9 2790 120
Fax +358 9 2910 210
http://www.aerial.fi
aerial@aerial.fi

AU600-2,45 AND AU600-2,45R RADIO RELAY ANTENNAS

The antenna in the picture is AU600-2,45R. AU600-2,45 is equipped with a conical radome.

Type	AU600-2,45	AU600-2,45R
Frequency	2,4GHz…2,5GHz	2,4GHz…2,5GHz
Bandwidth	0,1 GHz	0,1 GHz
Impedance	50 Ω	50 Ω
VSWR	1,5 max	1,5 max
Polarisation	Horisontal or vertical	Horisontal or vertical
Polarisation adjustment	± 5°	± 5°
Cross polar discrimination	25 dB	25 dB
Inter port isolation (1)	25 dB	25 dB
Gain (Topband)	20,7 dBi	20,7 dBi
Gain (Midband)	20,5 dBi	20,5 dBi
Gain (Bottomband)	20,3 dBi	20,3 dBi
3 dB beamwidth at midband	13,0°	13,0°
Front to back ratio (2)	20 dB	30 dB
Max. Continuous power	0,5 kW	0,5 kW
RF-connector/Flange	N female	N female
Waveguide type	-	-
Operational windspeed	40 m/s	40 m/s
Survival wind speed	55 m/s	55 m/s
Wind area	XX m² (more information available on request)	XX m² (more information available on request)
Dimensions	See separate brochure on dimensions	See separate brochure on dimensions
Weight with mounting accessories	See separate brochure on dimensions	See separate brochure on dimensions
Packing dimensions/gross weight	800 x 700 x 1000 mm, 40 kg	800 x 700 x 1000 mm, 40 kg
Mounting diameter	Default 30…115 mm	Default 30…115 mm
Azimuth adjustment	± 5°	± 5°
Elevation adjustment	± 5°	± 5
Materials	Aluminium Glassfiber radome	Aluminium UV stabilised PVC-radome
Options	Mounting tube diameter Wind rating Connector type Larger adjustment option	Mounting tube diameter Wind rating Connector type Larger adjustment option

(1) Only in dual polarised antennas.
(2) F/B for antennas without shroud 180° ± 40°. F/B for antennas without shroud 180° ± 80°.
Radiation pattern envelopes available on request

Aerial Oy
Box 22
04401 Järvenpää
Finland
Tel. +358 9 2790 120
Fax +358 9 2910 210
http://www.aerial.fi
aerial@aerial.fi

AU1200-2,45 AND AU1200-2,45R RADIO RELAY ANTENNAS

The antenna in the picture is AU1200-2,45R. AU1200-2,45 is equipped with a conical radome.

Two AU1200-2,45 antennas.

Type	AU1200-2,45	AU1200-2,45R
Frequency	2,4GHz...2,5GHz	2,4GHz...2,5GHz
Bandwidth	0,1 GHz	0,1 GHz
Impedance	50 Ω	50 Ω
VSWR	1,3 max	1,3 max
Polarisation	Horisontal or vertical	Horisontal or vertical
Polarisation adjustment	± 5°	± 5°
Cross polar discrimination	25 dB	25 dB
Inter port isolation (1)	25 dB	25 dB
Gain (Topband)	27,2 dBi	27,2 dBi
Gain (Midband)	27,0 dBi	27,0 dBi
Gain (Bottomband)	26,8 dBi	26,8 dBi
3 dB beamwidth at midband	6,5°	6,5°
Front to back ratio (2)	28 dB	35 dB
Max. Continuous power	0,5 kW	0,5 kW
RF-connector/Flange	N female	N female
Waveguide type	-	-
Operational windspeed	40 m/s	40 m/s
Survival wind speed	55 m/s	55 m/s
Wind area	XX m² (more information available on request)	XX m² (more information available on request)
Dimensions	See separate brochure on dimensions	See separate brochure on dimensions
Weight with mounting accessories	See separate brochure on dimensions	See separate brochure on dimensions
Packing dimensions/gross weight	1530 x 1100 x 1540 mm, 87 kg	1530 x 1100 x 1540 mm, 110 kg
Mounting diameter	Default 30...115 mm	Default 30...115 mm
Azimuth adjustment	± 5°	± 5°
Elevation adjustment	± 5°	± 5
Materials	Aluminium Glassfiber radome	Aluminium UV stabilised PVC-radome
Options	Mounting tube diameter Wind rating Connector type Larger adjustment option	Mounting tube diameter Wind rating Connector type Larger adjustment option

(1) Only in dual polarised antennas.
(2) F/B for antennas without shroud 180° ± 40°. F/B for antennas without shroud 180° ± 80°.
Radiation pattern envelopes available on request

Aerial Oy
Box 22
04401 Järvenpää
Finland
Tel. +358 9 2790 120
Fax +358 9 2910 210
http://www.aerial.fi
aerial@aerial.fi

AU850-2,4 PARABOLIC REFLECTOR ANTENNA

Type	AU850-2,4
Frequency	2,4…2,5 GHz
Bandwidth	100 MHz
Impedance	50 Ω DC grounded
VSWR	1,3 max
Polarisation	Horisontal or vertical
Gain	24 dbi
E-plane 3 dB beamwidth	10°
H-plane 3 dB beamwidth	10°
Electrical downtilt	None
Front to back ratio	25 dB
Max. Continuous power	0,5 kW
RF-connector	N female
Operational windspeed	40 m/s (default)
Survival windspeed	55 m/s (default)
Wind area	0,85 m²
Dimensions (∅xH)	850x600 mm
Weight	9 kg
Mounting diameter	∅ 30…115 mm pipe
Materials	Aluminium
Options	-

Aerial Oy
Box 22
04401 Järvenpää
Finland
Tel. +358 9 2790 120
Fax +358 9 2910 210
http://www.aerial.fi
aerial@aerial.fi

AU850-2,45R PARABOLIC REFLECTOR ANTENNA

Type	AU850-2,45R
Frequency	2,4…2,5 GHz
Bandwidth	100 MHz
Impedance	50 Ω
VSWR	1,3 max
Polarisation	Horisontal or vertical
Gain	24 dbi
E-plane 3 dB beamwidth	10°
H-plane 3 dB beamwidth	10°
Electrical downtilt	None
Front to back ratio	30 dB
Max. Continuous power	0,5 kW
RF-connector	N female
Operational windspeed	40 m/s (default)
Survival windspeed	55 m/s (default)
Wind area	0,95 m²
Dimensions (∅xH)	850x600 mm
Weight	31,5 kg
Mounting diameter	∅ 30…115 mm pipe
Materials	Aluminium Glassfiber radome Glass reinforced PE
Options	-

Aerial Oy
Box 22
04401 Järvenpää
Finland
Tel. +358 9 2790 120
Fax +358 9 2910 210
http://www.aerial.fi
aerial@aerial.fi

OMNIDIRECTIONAL WLAN ANTENNA AV1433

Type	AV1433
Frequency	2,4...2,5 GHz
Bandwidth	100 MHz
Impedance	50 Ω
VSWR	1,5 max
Polarisation	Vertical
Gain	2 dBi
E-plane 3 dB beamwidth	70°
H-plane 3 dB beamwidth	-
Electrical downtilt	None
Front to back ratio	-
Max. Continuous power	0,5 kW
RF-connector	N female
Operational windspeed	40 m/s (default)
Survival windspeed	55 m/s (default)
Wind area	Not relevant
Dimensions (∅ x H)	Ø90 base plate x 200 mm
Weight	0,2 kg
Mounting	Surface mounting
Materials	Aluminium Glass reinforced PE Glassfiber radome
Options	-

Aerial Oy

Box 22
04401 Järvenpää
Finland

Tel. +358 9 2790 120
Fax +358 9 2910 210

http://www.aerial.fi
aerial@aerial.fi

AV1434 OMNIDIRECTIONAL WLAN ANTENNA

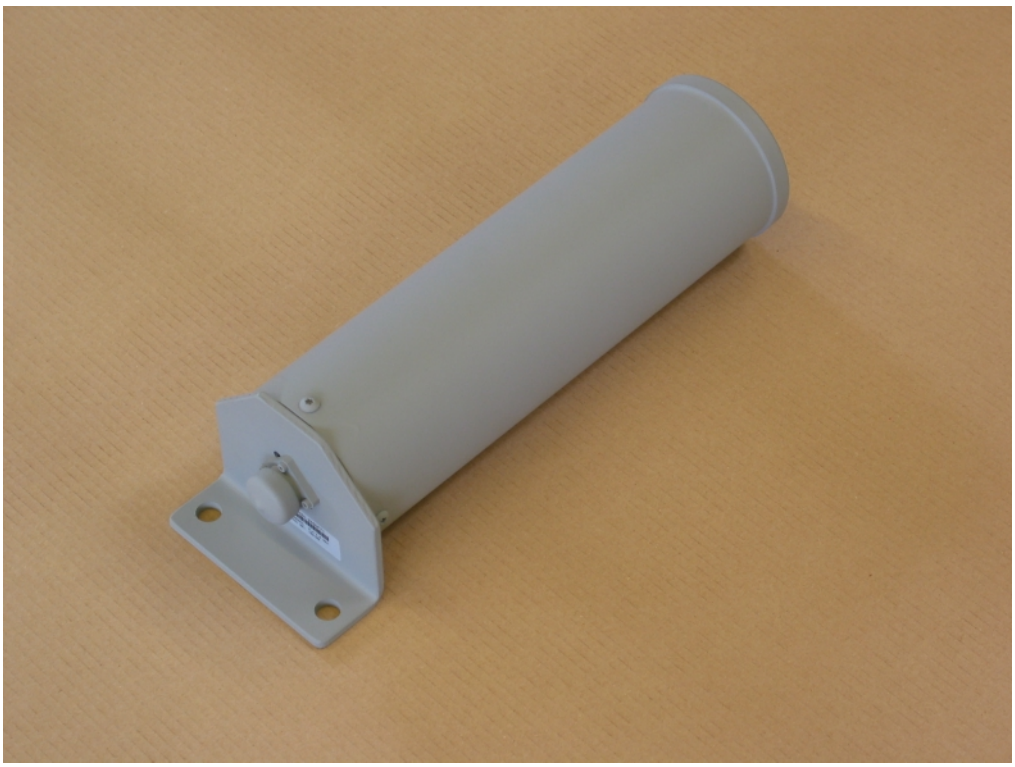

Type	AV1434
Frequency	2,4…2,5 GHz
Bandwidth	0,1 GHz
Impedance	50 Ω DC grounded
VSWR	1,5 max
Polarisation	Vertical
Gain	5 dBi
E-plane 3 dB beamwidth	30°
H-plane 3 dB beamwidth	360°
Electrical downtilt	None
Front to back ratio	-
Max. Continuous power	0,5 kW
RF-connector	7/16 or N female
Operational windspeed	40 m/s (default)
Survival windspeed	55 m/s (default)
Wind area	0,07 m²
Dimensions (∅xH)	106x400 mm
Weight	2 kg
Mounting diameter	∅ 30…115 mm pipe
Materials	Aluminium Glassfiber radome Glass reinforced PE
Options	Colour

Aerial Oy

Box 22
04401 Järvenpää
Finland

Tel. +358 9 2790 120
Fax +358 9 2910 210

http://www.aerial.fi
aerial@aerial.fi

AV1438 OMNIDIRECTIONAL WLAN ANTENNA

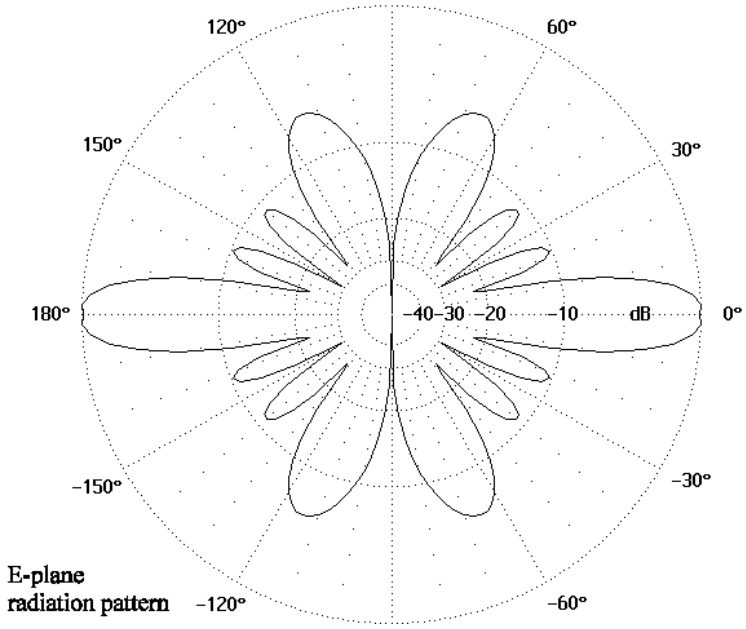

Type	AV1438
Frequency	2,4…2,5 GHz
Bandwidth	0,1 GHz
Impedance	50 Ω DC grounded
VSWR	1,5 max
Polarisation	Vertical
Gain	8 dBi
E-plane 3 dB beamwidth	15°
H-plane 3 dB beamwidth	360°
Electrical downtilt	None
Front to back ratio	-
Max. Continuous power	0,2 kW
RF-connector	7/16 or N female
Operational windspeed	40 m/s (default)
Survival windspeed	55 m/s (default)
Wind area	0,07 m²
Dimensions (∅xH)	106x690 mm
Weight	3 kg
Mounting diameter	∅ 30…115 mm pipe
Materials	Aluminium Glassfiber radome Glass reinforced PE
Options	Colour

Aerial Oy
Box 22
04401 Järvenpää
Finland
Tel. +358 9 2790 120
Fax +358 9 2910 210
http://www.aerial.fi
aerial@aerial.fi

AV1439 DIRECTIONAL WLAN ANTENNA

Type	AV1439
Frequency	2,4…2,5 GHz
Bandwidth	0,1 GHz
Impedance	50 Ω DC grounded
VSWR	1,5 max
Polarisation	Vertical
Gain	11 dBi
E-plane 3 dB beamwidth	15°
H-plane 3 dB beamwidth	150°
Electrical downtilt	None
Front to back ratio	10 dB
Max. Continuous power	0,5 kW
RF-connector	7/16 or N female
Operational windspeed	40 m/s (default)
Survival windspeed	55 m/s (default)
Wind area	0,07 m²
Dimensions (∅xH)	106x690 mm
Weight	3 kg
Mounting diameter	∅ 30…115 mm pipe
Materials	Aluminium Glassfiber radome Glass reinforced PE
Options	Colour

Aerial Oy
Box 22
04401 Järvenpää
Finland
Tel. +358 9 2790 120
Fax +358 9 2910 210
http://www.aerial.fi
aerial@aerial.fi

AV1479 OMNIDIRECTIONAL WLAN ANTENNA

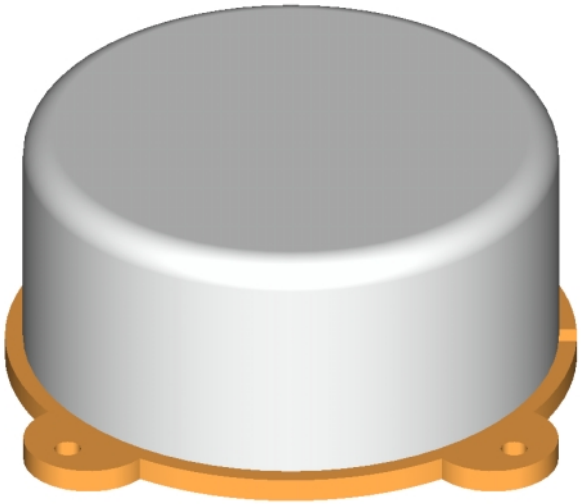

Type	AV1479
Frequency	2,4...2,5 GHz
Bandwidth	0,1 GHz
Impedance	50 Ω DC grounded
VSWR	1,5 max
Polarisation	Vertical
Gain	0 dBi
E-plane 3 dB beamwidth	80°
H-plane 3 dB beamwidth	360°
Electrical downtilt	None
Front to back ratio	-
Max. Continuous power	0,5 kW
RF-connector	N or TNC female
Operational windspeed	40 m/s (default)
Survival windspeed	55 m/s (default)
Wind area	0,001 m²
Dimensions (HxWxD)	45x94x94 mm
Weight	0,2 kg
Mounting diameter	∅ 30...115 mm pipe
Materials	Aluminium baseplate Glassfiber radome Copper radiator
Options	Colour

Aerial Oy

Box 22
04401 Järvenpää
Finland

Tel. +358 9 2790 120
Fax +358 9 2910 210

http://www.aerial.fi
aerial@aerial.fi

AV2410 DIRECTIONAL WLAN ANTENNA

Type	AV2410
Frequency	2,4…2,5 GHz
Bandwidth	0,1 GHz
Impedance	50 Ω DC grounded
VSWR	1,5 max
Polarisation	Vertical or horisontal
Gain	8,5 dBi
E-plane 3 dB beamwidth	70°
H-plane 3 dB beamwidth	70°
Electrical downtilt	None
Front to back ratio	15 dB
Max. Continuous power	0,2 kW
RF-connector	SMA female on a 140 mm jumper
Operational windspeed	40 m/s (default)
Survival windspeed	55 m/s (default)
Wind area	0,03 m²
Dimensions (HxWxD)	125x125x50 mm
Weight	0,1 kg
Mounting	Wall mount included
Materials	Aluminium ABS radome
Options	Colour

Aerial Oy

Box 22
04401 Järvenpää
Finland

Tel. +358 9 2790 120
Fax +358 9 2910 210

http://www.aerial.fi
aerial@aerial.fi

AV2420 DIRECTIONAL WLAN ANTENNA

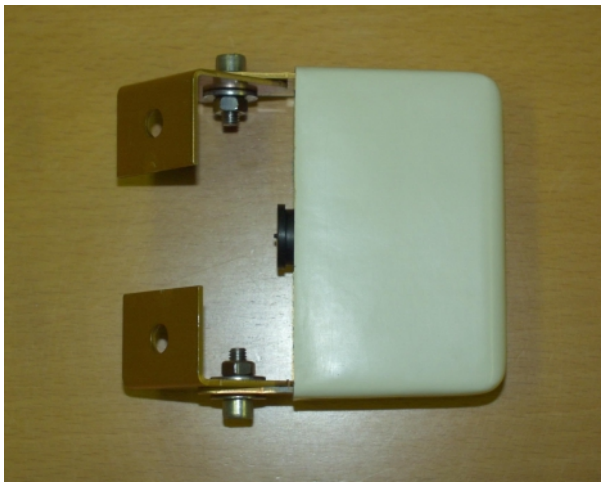

Type	AV2420
Frequency	2,4...2,5 GHz
Bandwidth	0,1 GHz
Impedance	50 Ω DC grounded
VSWR	1,5 max
Polarisation	Vertical or horisontal
Gain	6 dBi
E-plane 3 dB beamwidth	80°
H-plane 3 dB beamwidth	120°
Electrical downtilt	None
Front to back ratio	10-15 dB
Max. Continuous power	0,5 kW
RF-connector	7/16 or N female
Operational windspeed	40 m/s (default)
Survival windspeed	55 m/s (default)
Wind area	0,006 m²
Dimensions (HxWxD)	100x40x60 mm
Weight	0,2 kg
Mounting	Wall mount included
Materials	Aluminium Glassfiber radome Glass reinforced PE
Options	Colour

Aerial Oy

Box 22
04401 Järvenpää
Finland

Tel. +358 9 2790 120
Fax +358 9 2910 210

http://www.aerial.fi
aerial@aerial.fi

AV2460 AND AV2462 DIRECTIONAL WLAN ANTENNAS

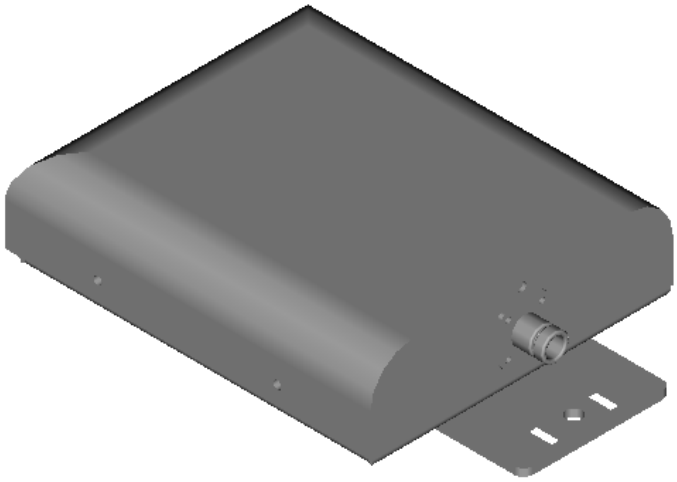

Type	AV2460	AV2462
Frequency	2,4...2,5 GHz	2,4...2,5 GHz
Bandwidth	0,1 GHz	0,1 GHz
Impedance	50 Ω DC grounded	50 Ω DC grounded
VSWR	1,5 max	1,5 max
Polarisation	Vertical	Vertical
Gain	10 dBi	13 dBi
E-plane 3 dB beamwidth	55°	25°
H-plane 3 dB beamwidth	65°	65°
Electrical downtilt	None	None
Front to back ratio	20 dB	20 dB
Max. Continuous power	0,5 kW	0,5 kW
RF-connector	7/16 or N female	7/16 or N female
Operational windspeed	40 m/s (default)	40 m/s (default)
Survival windspeed	55 m/s (default)	55 m/s (default)
Wind area	0,07 m²	0,96 m²
Dimensions (HxWxD)	200x160x50 mm	300x160x50 mm
Weight	0,7 kg	1,8 kg
Mounting diameter	∅ 30...115 mm pipe	∅ 30...115 mm pipe
Materials	Aluminium Glassfiber radome Glass reinforced PE	Aluminium Glassfiber radome Glass reinforced PE
Options	Colour	Colour

Aerial Oy
Box 22
04401 Järvenpää
Finland
Tel. +358 9 2790 120
Fax +358 9 2910 210
http://www.aerial.fi
aerial@aerial.fi

AV2492 AND AV2494 DIRECTIONAL WLAN ANTENNAS

Type	AV2492	AV2494
Frequency	2,4...2,5 GHz	2,4...2,5 GHz
Bandwidth	0,1 GHz	0,1 GHz
Impedance	50 Ω DC grounded	50 Ω DC grounded
VSWR	1,5 max	1,5 max
Polarisation	Vertical	Vertical
Gain	10 dBi	13 dBi
E-plane 3 dB beamwidth	25°	15°
H-plane 3 dB beamwidth	90°	90°
Electrical downtilt	None	None
Front to back ratio	15 dB	15 dB
Max. Continuous power	0,5 kW	0,5 kW
RF-connector	7/16 or N female	7/16 or N female
Operational windspeed	40 m/s (default)	40 m/s (default)
Survival windspeed	55 m/s (default)	55 m/s (default)
Wind area	0,096 m²	0,18 m²
Dimensions (HxWxD)	300x160x50 mm	560x160x50 mm
Weight	1,2 kg	1,8 kg
Mounting diameter	∅ 30...115 mm pipe	∅ 30...115 mm pipe
Materials	Aluminium Glassfiber radome Glass reinforced PE	Aluminium Glassfiber radome Glass reinforced PE
Options	Colour	Colour

Aerial Oy
Box 22
04401 Järvenpää
Finland
Tel. +358 9 2790 120
Fax +358 9 2910 210
http://www.aerial.fi
aerial@aerial.fi

AV2498 DIRECTIONAL WLAN ANTENNA

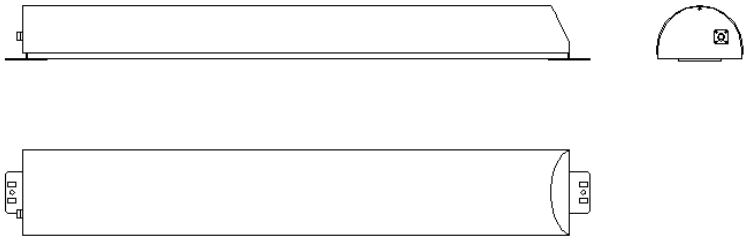

Type	AV2498
Frequency	2,4…2,5 GHz
Bandwidth	0,1 GHz
Impedance	50 Ω DC grounded
VSWR	1,5 max
Polarisation	Vertical
Gain	16 dBi
E-plane 3 dB beamwidth	9°
H-plane 3 dB beamwidth	90°
Electrical downtilt	None
Front to back ratio	15 dB
Max. Continuous power	150 W
RF-connector	N-female
Operational windspeed	40 m/s (default)
Survival windspeed	55 m/s (default)
Wind area	0,35 m²
Dimensions (HxWxD)	1050x160x100 mm
Weight	2,5 kg
Mounting diameter	∅ 30…115 mm pipe
Materials	Aluminium Glassfiber radome Glass reinforced PE
Options	Colour

Aerial Oy

Box 22
04401 Järvenpää
Finland

Tel. +358 9 2790 120
Fax +358 9 2910 210

http://www.aerial.fi
aerial@aerial.fi

AV2492-H DIRECTIONAL WLAN ANTENNA

Type	AV2492-H
Frequency	2,4...2,5 GHz
Bandwidth	0,1 GHz
Impedance	50 Ω DC grounded
VSWR	1,5 max
Polarisation	Horisontal
Gain	10 dBi
E-plane 3 dB beamwidth	50°
H-plane 3 dB beamwidth	45°
Electrical downtilt	None
Front to back ratio	15 dB
Max. Continuous power	0,5 kW
RF-connector	7/16 or N female
Operational windspeed	40 m/s (default)
Survival windspeed	55 m/s (default)
Wind area	0,096 m²
Dimensions (HxWxD)	300x160x50 mm
Weight	1,2 kg
Mounting diameter	∅ 30...115 mm pipe
Materials	Aluminium Glassfiber radome Glass reinforced PE
Options	Colour

Aerial Oy

Box 22
04401 Järvenpää
Finland

Tel. +358 9 2790 120
Fax +358 9 2910 210

http://www.aerial.fi
aerial@aerial.fi

AV6502 SHORT BACKFIRE ANTENNA

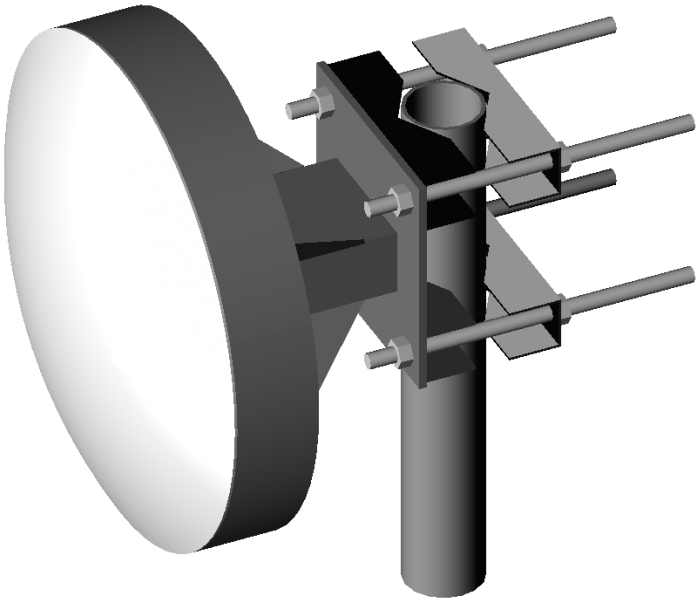

Type	AV6502
Frequency	2,4...2,5 GHz
Bandwidth	0,1 GHz
Impedance	50 Ω
VSWR	1,5 max
Polarisation	Vertical or horisontal
Gain	18 dBi
E-plane 3 dB beamwidth	20°
H-plane 3 dB beamwidth	20°
Electrical downtilt	None
Front to back ratio	30 dB
Max. Continuous power	0,5 kW
RF-connector	7/16 or N female
Operational windspeed	40 m/s (default)
Survival windspeed	55 m/s (default)
Wind area	0,17 m²
Dimensions (∅xH)	400x200 mm
Weight	5 kg
Mounting diameter	∅ 30...115 mm pipe
Materials	Aluminium Glassfiber radome
Options	Colour

Aerial Oy
Box 22
04401 Järvenpää
Finland
Tel. +358 9 2790 120
Fax +358 9 2910 210
http://www.aerial.fi
aerial@aerial.fi

AV7501 SHORT BACKFIRE ANTENNA

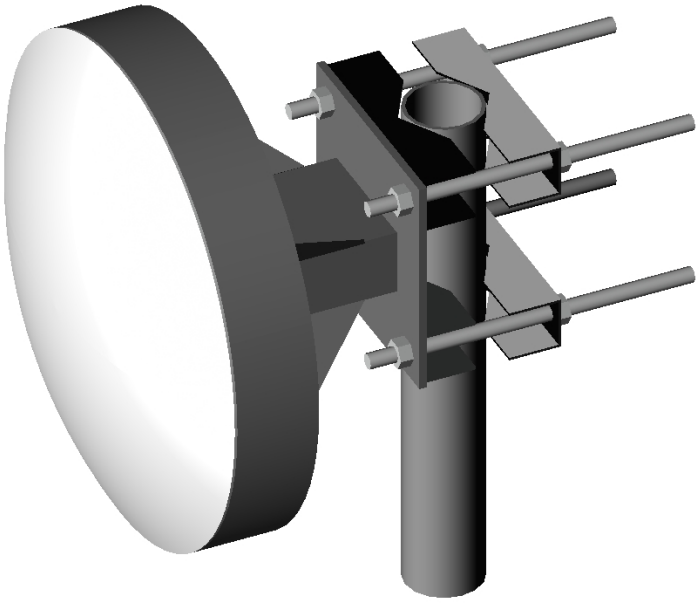

Type	AV7501
Frequency	3,4...3,5 GHz
Bandwidth	0,1 GHz
Impedance	50 Ω
VSWR	1,5 max
Polarisation	Vertical or horisontal
Gain	18 dBi
E-plane 3 dB beamwidth	20°
H-plane 3 dB beamwidth	20°
Electrical downtilt	None
Front to back ratio	30 dB
Max. Continuous power	0,5 kW
RF-connector	7/16 or N female
Operational windspeed	40 m/s (default)
Survival windspeed	55 m/s (default)
Wind area	0,10 m²
Dimensions (∅xH)	300x150 mm
Weight	2 kg
Mounting diameter	∅ 30...115 mm pipe
Materials	Aluminium Glassfiber radome
Options	Colour

Aerial Oy
Box 22
04401 Järvenpää
Finland
Tel. +358 9 2790 120
Fax +358 9 2910 210
http://www.aerial.fi
aerial@aerial.fi

AV1433-3550

Type	AV1433-3550
Frequency	3,4...3,7 GHz
Bandwidth	0,3 GHz
Impedance	50 Ω
VSWR	1,5 typical
Polarisation	Vertical
Gain	2 dBi
E-plane 3 dB beamwidth	360°
H-plane 3 dB beamwidth	60°
Electrical downtilt	None
Front to back ratio	- dB
Max. Continuous power	0,1 kW
RF-connector	N female
Operational windspeed	40 m/s (default)
Survival windspeed	55 m/s (default)
Wind area	0,005 m²
Dimensions (∅xH)	20x160 mm
Weight	0,2 kg
Mounting diameter	∅ 30...115 mm pipe
Materials	Aluminium Glassfiber radome
Options	-

Aerial Oy
Box 22
04401 Järvenpää
Finland
Tel. +358 9 2790 120
Fax +358 9 2910 210
http://www.aerial.fi
aerial@aerial.fi

AV1434-3550

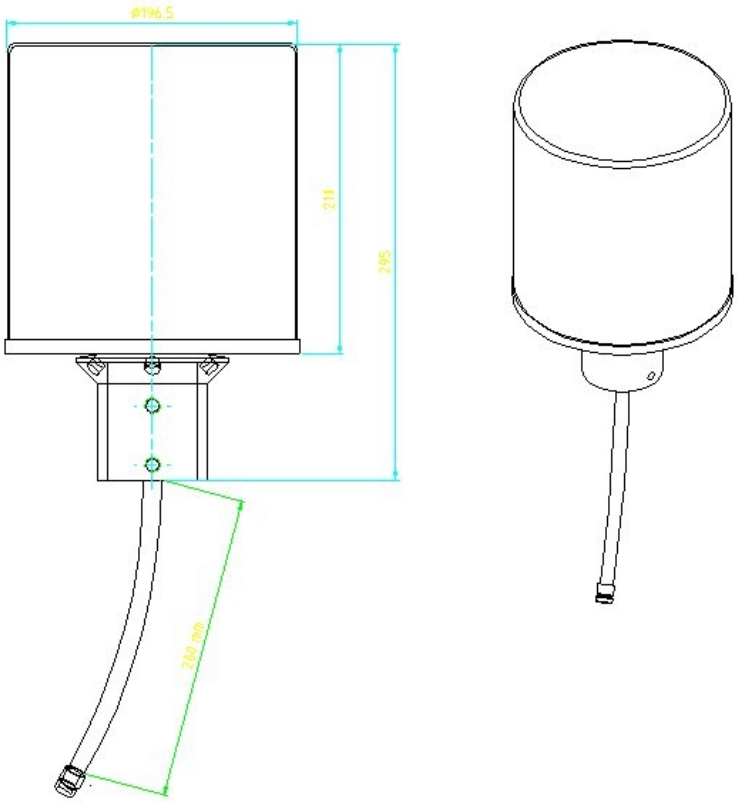

Type	AV1434-3550
Frequency	3,4…3,7 GHz
Bandwidth	0,3 GHz
Impedance	50 Ω
VSWR	1,5 typical
Polarisation	Vertical
Gain	5 dBi
E-plane 3 dB beamwidth	360°
H-plane 3 dB beamwidth	30°
Electrical downtilt	None
Front to back ratio	- dB
Max. Continuous power	0,5 kW
RF-connector	N female
Operational windspeed	40 m/s (default)
Survival windspeed	55 m/s (default)
Wind area	0,05 m²
Dimensions (∅xH)	200x295 mm
Weight	1,5 kg
Mounting diameter	∅ 45…60 mm pipe
Materials	Aluminium Glassfiber radome
Options	∅ 30…115 mm pipe

Aerial Oy
Box 22
04401 Järvenpää
Finland
Tel. +358 9 2790 120
Fax +358 9 2910 210
http://www.aerial.fi
aerial@aerial.fi

AV1438-3550

Type	AV1438-3550
Frequency	3,4...3,7 GHz
Bandwidth	0,3 GHz
Impedance	50 Ω
VSWR	1,5 typical
Polarisation	Vertical
Gain	8 dBi
E-plane 3 dB beamwidth	360°
H-plane 3 dB beamwidth	15°
Electrical downtilt	None
Front to back ratio	- dB
Max. Continuous power	0,1 kW
RF-connector	N female
Operational windspeed	40 m/s (default)
Survival windspeed	55 m/s (default)
Wind area	0,04 m²
Dimensions (∅xH)	65x480 mm
Weight	2,5 kg
Mounting diameter	∅ 35...115 mm pipe
Materials	Aluminium Copper Glassfiber radome
Options	-

Aerial Oy
Box 22
04401 Järvenpää
Finland
Tel. +358 9 2790 120
Fax +358 9 2910 210
http://www.aerial.fi
aerial@aerial.fi

AV8001 OMNIDIRECTIONAL ANTENNA

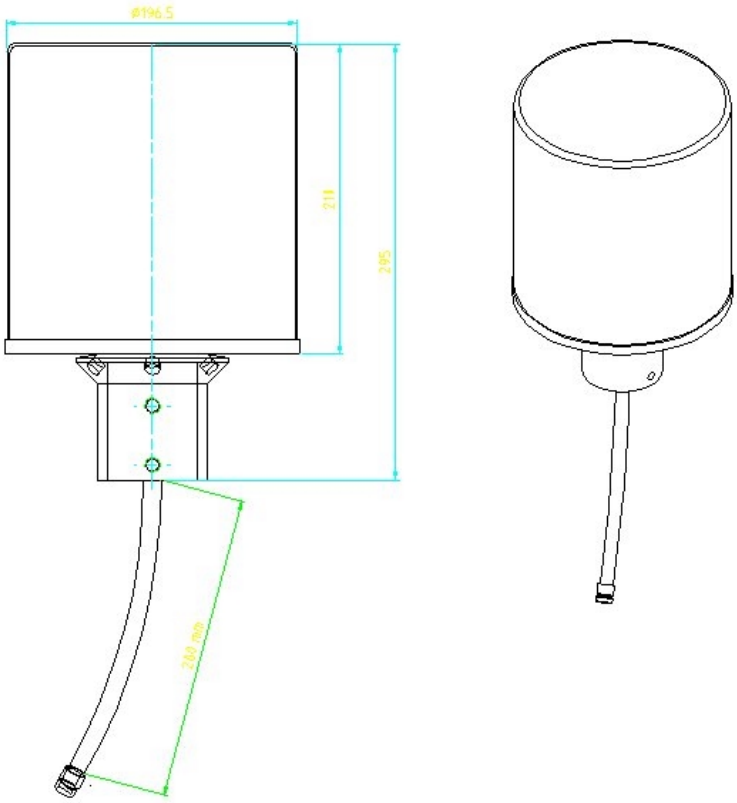

Type	AV8001
Frequency	5,47…5,875 GHz
Bandwidth	0,15 GHz
Impedance	50 Ω
VSWR	1,5 typical
Polarisation	Vertical
Gain	4,5 dBi
E-plane 3 dB beamwidth	360°
H-plane 3 dB beamwidth	15°
Electrical downtilt	None
Front to back ratio	- dB
Max. Continuous power	0,5 kW
RF-connector	N female
Operational windspeed	40 m/s (default)
Survival windspeed	55 m/s (default)
Wind area	0,05 m²
Dimensions (∅xH)	200x295 mm
Weight	1,5 kg
Mounting diameter	∅ 30…115 mm pipe
Materials	Aluminium Glassfiber radome
Options	-

Aerial Oy
Box 22
04401 Järvenpää
Finland
Tel. +358 9 2790 120
Fax +358 9 2910 210
http://www.aerial.fi
aerial@aerial.fi

AV8066 DIRECTIONAL ANTENNA

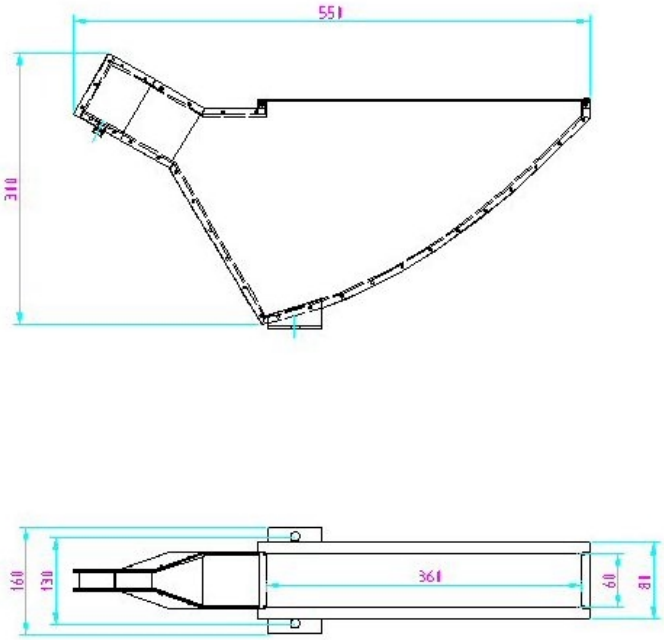

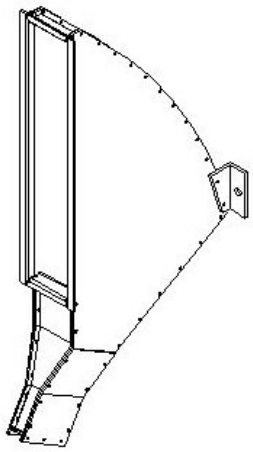

Type	AV8066
Frequency	5,47…5,875 GHz
Bandwidth	0,405 GHz
Impedance	50 Ω
VSWR	1,5 max
Polarisation	Vertical
Gain	17 dBi
E-plane 3 dB beamwidth	10°
H-plane 3 dB beamwidth	60°
Electrical downtilt	None
Front to back ratio	25 dB
Max. Continuous power	100 W
RF-connector	N female
Operational windspeed	40 m/s (default)
Survival windspeed	55 m/s (default)
Wind area	0,1 m²
Dimensions (HxWxD)	550x160X300 mm
Weight	2,5 kg
Mounting diameter	∅ 30…115 mm pipe
Materials	Aluminium Glassfiber radome
Options	-

Aerial Oy
Box 22
04401 Järvenpää
Finland
Tel. +358 9 2790 120
Fax +358 9 2910 210
http://www.aerial.fi
aerial@aerial.fi

AV8501 SHORT BACKFIRE ANTENNA

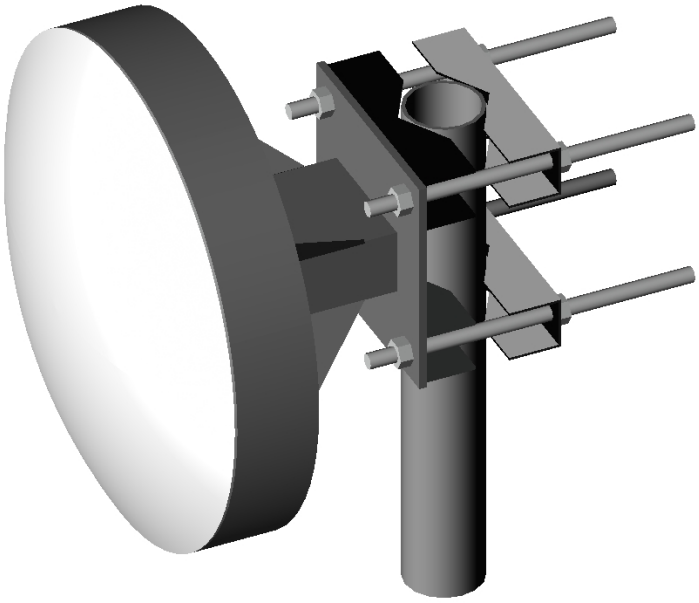

Type	AV8501
Frequency	5,7...5,85 GHz
Bandwidth	0,15 GHz
Impedance	50 Ω
VSWR	1,5 max
Polarisation	Vertical or horisontal
Gain	18 dBi
E-plane 3 dB beamwidth	20°
H-plane 3 dB beamwidth	20°
Electrical downtilt	None
Front to back ratio	30 dB
Max. Continuous power	0,5 kW
RF-connector	7/16 or N female
Operational windspeed	40 m/s (default)
Survival windspeed	55 m/s (default)
Wind area	0,05 m²
Dimensions (∅xH)	180x100 mm
Weight	0,5 kg
Mounting diameter	∅ 30...115 mm pipe
Materials	Aluminium Glassfiber radome
Options	Colour

Aerial Oy
Box 22
04401 Järvenpää
Finland
Tel. +358 9 2790 120
Fax +358 9 2910 210
http://www.aerial.fi
aerial@aerial.fi

AU300…AU3000-5,6R/-5,6RD AND AU300…AU3000-5,6/-5,6D RADIO RELAY ANTENNA ELECTRICAL SPECIFICATIONS

AU300….3000-5,6R/-5,6RD ELECTRICAL SPECIFICATIONS								
Type		AU300	AU600	AU850	AU1200	AU1800	AU2400	AU3000
Diameter		0,3 m	0,6 m	0,85 m	1,2 m	1,8 m	2,4 m	3,0 m
Frequency		5,47-5,725 GHz						
Gain, Lowband Gain, Midband Gain, Highband		21,6 dBi 21,8 dBi 22,0 dBi	27,6 dBi 27,8 dBi 28,0 dBi	30,6 dBi 30,8 dBi 31,0 dBi	34,1 dBi 34,3 dBi 34,5 dBi	37,6 dBi 37,8 dBi 38,0 dBi	40,1 dBi 40,3 dBi 40,5 dBi	42,1 dBi 42,3 dBi 42,5 dBi
3 dB beamwidth at midband{4}		11,6º	5,8º	4,1º	2,9º	2,0º	1,5º	1,2º
F/B{4}		40 dB	45 dB	50 dB	55 dB	58 dB	60 dB	60 dB
Connector{2}		N-female panel or cable connector or waveguide flange						
VSWR, max		2,0	1,5	1,5	1,5	1,3	1,3	1,3
Cross polarization discrimination		25 dB	25 dB	25 dB	30 dB	30 dB	30 dB	30 dB
Polarisation isolation{1}		20 dB	24 dB	28 dB	30 dB	30 dB	30 dB	30 dB
Mounting diameter (recommended)		60 mm	60 mm	60 mm	100 mm	100 mm	100 mm	100 mm
Azimuth / Elevation adjustment{3}		± 5º	± 5º	± 5º	± 5º	± 5º	± 5º	± 5º
Materials		Aluminium alloy reflector, Hot dip galvanized steel mount, UV-stabilised PVC-radome.						
Weight (gross/net)		21/12 kg	40/20 kg	45/24 kg	110/75 kg	170/110 kg	440/180 kg	520/255 kg
Packing size:	H W D	50 cm 35 cm 35 cm	100 cm 90 cm 80 cm	130 cm 110 cm 110 cm	154 cm 110 cm 153 cm	167 cm 163 cm 206 cm	249 cm 280 cm 323 cm	330 cm 290 cm 330 cm

AU300….3000-5,6/-5,6D ELECTRICAL SPECIFICATIONS								
Type		AU300	AU600	AU850	AU1200	AU1800	AU2400	AU3000
Diameter		NA	0,6 m	0,85 m	1,2 m	1,8 m	2,4 m	3,0 m
Frequency		5,47-5,725 GHz						
Gain, Lowband Gain, Midband Gain, Highband		NA NA NA	27,6 dBi 27,8 dBi 28,0 dBi	30,6 dBi 30,8 dBi 31,0 dBi	34,1 dBi 34,3 dBi 34,5 dBi	37,6 dBi 37,8 dBi 38,0 dBi	40,1 dBi 40,3 dBi 40,5 dBi	42,1 dBi 42,3 dBi 42,5 dBi
3 dB beamwidth at midband{4}		NA	5,8º	4,1º	2,9º	2,0º	1,5º	1,2º
F/B{4}		NA	37 dB	42 dB	47 dB	50 dB	52 dB	52 dB
Connector{2}		N-female panel or cable connector or waveguide flange						
VSWR, max		NA	1,5	1,5	1,5	1,3	1,3	1,3
Cross polarization discrimination		NA	25 dB	25 dB	30 dB	30 dB	30 dB	30 dB
Polarisation isolation{1}		NA	24 dB	28 dB	30 dB	30 dB	30 dB	30 dB
Mounting diameter (recommended)		NA	60 mm	60 mm	100 mm	100 mm	100 mm	100 mm
Azimuth / Elevation adjustment{3}		NA	± 5º	± 5º	± 5º	± 5º	± 5º	± 5º
Materials		Aluminium alloy reflector, Hot dip galvanized steel mount, conical glassfiber radome						
Weight (gross/net)		NA	36/18 kg	40/20 kg	87/52 kg	195/99 kg	407/147 kg	467/201 kg
Packing size:	H W D	NA NA NA	100 cm 90 cm 80 cm	130 cm 110 cm 110 cm	154 cm 110 cm 153 cm	167 cm 163 cm 206 cm	249 cm 280 cm 323 cm	330 cm 290 cm 330 cm

{1} For antennas with dual polarization.
{2} Antennas with other connectors available on request.
{3} Elevation adjust option ±10 degrees available.
{4} Both co-polarisation and cross-polarisation radiation pattern envelopes available on request.

Aerial Oy
Box 22
04401 Järvenpää
Finland
Tel. +358 9 2790 120
Fax +358 9 2910 210
http://www.aerial.fi
aerial@aerial.fi

AU300…AU3000-5,7R/-5,7RD AND AU300…AU3000-5,7/-5,7D RADIO RELAY ANTENNA ELECTRICAL SPECIFICATIONS

AU300....3000-5,7R/-5,7RD ELECTRICAL SPECIFICATIONS								
Type		AU300	AU600	AU850	AU1200	AU1800	AU2400	AU3000
Diameter		0,3 m	0,6 m	0,85 m	1,2 m	1,8 m	2,4 m	3,0 m
Frequency		5,47-5,875 GHz						
Gain, Lowband Gain, Midband Gain, Highband		21,6 dBi 21,9 dBi 22,2 dBi	27,6 dBi 27,9 dBi 28,2 dBi	30,6 dBi 30,9 dBi 31,2 dBi	34,1 dBi 34,4 dBi 34,7 dBi	37,6 dBi 37,9 dBi 38,2 dBi	40,1 dBi 40,4 dBi 40,7 dBi	42,1 dBi 42,4 dBi 42,7 dBi
3 dB beamwidth at midband{4}		11,5º	5,8º	4,1º	2,9º	1,9º	1,5º	1,2º
F/B{4}		40 dB	45 dB	50 dB	55 dB	58 dB	60 dB	60 dB
Connector{2}		N-female panel or cable connector or waveguide flange						
VSWR, max		2,5	2,0	1,8	1,8	1,5	1,5	1,5
Cross polarization discrimination		25 dB	25 dB	25 dB	30 dB	30 dB	30 dB	30 dB
Polarisation isolation{1}		20 dB	24 dB	28 dB	30 dB	30 dB	30 dB	30 dB
Mounting diameter (recommended)		60 mm	60 mm	60 mm	100 mm	100 mm	100 mm	100 mm
Azimuth / Elevation adjustment{3}		± 5º	± 5º	± 5º	± 5º	± 5º	± 5º	± 5º
Materials		Aluminium alloy reflector, Hot dip galvanized steel mount, UV-stabilised PVC-radome.						
Weight (gross/net)		21/12 kg	40/20 kg	45/24 kg	110/75 kg	170/110 kg	440/180 kg	520/255 kg
Packing size:	H W D	50 cm 35 cm 35 cm	100 cm 90 cm 80 cm	130 cm 110 cm 110 cm	154 cm 110 cm 153 cm	167 cm 163 cm 206 cm	249 cm 280 cm 323 cm	330 cm 290 cm 330 cm

AU300....3000-5,7/-5,7D ELECTRICAL SPECIFICATIONS								
Type		AU300	AU600	AU850	AU1200	AU1800	AU2400	AU3000
Diameter		NA	0,6 m	0,85 m	1,2 m	1,8 m	2,4 m	3,0 m
Frequency		5,47-5,875 GHz						
Gain, Lowband Gain, Midband Gain, Highband		NA NA NA	27,6 dBi 27,9 dBi 28,2 dBi	30,6 dBi 30,9 dBi 31,2 dBi	34,1 dBi 34,4 dBi 34,7 dBi	37,6 dBi 37,9 dBi 38,2 dBi	40,1 dBi 40,4 dBi 40,7 dBi	42,1 dBi 42,4 dBi 42,7 dBi
3 dB beamwidth at midband{4}		NA	5,8º	4,1º	2,9º	1,9º	1,5º	1,2º
F/B{4}		NA	37 dB	42 dB	47 dB	50 dB	52 dB	52 dB
Connector{2}		N-female panel or cable connector or waveguide flange						
VSWR, max		NA	2,0	1,8	1,8	1,5	1,5	1,5
Cross polarization discrimination		NA	25 dB	25 dB	30 dB	30 dB	30 dB	30 dB
Polarisation isolation{1}		NA	24 dB	28 dB	30 dB	30 dB	30 dB	30 dB
Mounting diameter (recommended)		NA	60 mm	60 mm	100 mm	100 mm	100 mm	100 mm
Azimuth / Elevation adjustment{3}		NA	± 5º	± 5º	± 5º	± 5º	± 5º	± 5º
Materials		Aluminium alloy reflector, Hot dip galvanized steel mount, conical glassfiber radome						
Weight (gross/net)		NA	36/18 kg	40/20 kg	87/52 kg	195/99 kg	407/147 kg	467/201 kg
Packing size:	H W D	NA NA NA	100 cm 90 cm 80 cm	130 cm 110 cm 110 cm	154 cm 110 cm 153 cm	167 cm 163 cm 206 cm	249 cm 280 cm 323 cm	330 cm 290 cm 330 cm

{1} For antennas with dual polarization.
{2} Antennas with other connectors available on request.
{3} Elevation adjust option ±10 degrees available.
{4} Both co-polarisation and cross-polarisation radiation pattern envelopes available on request.

Aerial Oy
Box 22
04401 Järvenpää
Finland
Tel. +358 9 2790 120
Fax +358 9 2910 210
http://www.aerial.fi
aerial@aerial.fi

AU300...AU3000-5,8R/-5,8RD AND AU300...AU3000-5,8/-5,8D RADIO RELAY ANTENNA ELECTRICAL SPECIFICATIONS

AU300....3000-5,8R/-5,8RD ELECTRICAL SPECIFICATIONS								
Type		AU300	AU600	AU850	AU1200	AU1800	AU2400	AU3000
Diameter		0,3 m	0,6 m	0,85 m	1,2 m	1,8 m	2,4 m	3,0 m
Frequency		5,725-5,875 GHz						
Gain, Lowband Gain, Midband Gain, Highband		22,0 dBi 22,1 dBi 22,2 dBi	28,0 dBi 28,1 dBi 28,2 dBi	31,0 dBi 31,1 dBi 31,2 dBi	34,5 dBi 34,6 dBi 34,7 dBi	38,0 dBi 37,1 dBi 38,2 dBi	40,5 dBi 40,6 dBi 40,7 dBi	42,5 dBi 42,6 dBi 42,7 dBi
3 dB beamwidth at midband{4}		11,2º	5,6º	4,0º	2,8º	1,9º	1,4º	1,15º
F/B{4}		40 dB	45 dB	50 dB	55 dB	58 dB	60 dB	60 dB
Connector{2}		N-female panel or cable connector or waveguide flange						
VSWR, max		2,0	1,5	1,5	1,5	1,3	1,3	1,3
Cross polarization discrimination		25 dB	25 dB	25 dB	30 dB	30 dB	30 dB	30 dB
Polarisation isolation{1}		20 dB	24 dB	28 dB	30 dB	30 dB	30 dB	30 dB
Mounting diameter (recommended)		60 mm	60 mm	60 mm	100 mm	100 mm	100 mm	100 mm
Azimuth / Elevation adjustment{3}		± 5º	± 5º	± 5º	± 5º	± 5º	± 5º	± 5º
Materials		Aluminium alloy reflector, Hot dip galvanized steel mount, UV-stabilised PVC-radome.						
Weight (gross/net)		21/12 kg	40/20 kg	45/24 kg	110/75 kg	170/110 kg	440/180 kg	520/255 kg
Packing size:	H W D	50 cm 35 cm 35 cm	100 cm 90 cm 80 cm	130 cm 110 cm 110 cm	154 cm 110 cm 153 cm	167 cm 163 cm 206 cm	249 cm 280 cm 323 cm	330 cm 290 cm 330 cm

AU300....3000-5,8/-5,8D ELECTRICAL SPECIFICATIONS								
Type		AU300	AU600	AU850	AU1200	AU1800	AU2400	AU3000
Diameter		NA	0,6 m	0,85 m	1,2 m	1,8 m	2,4 m	3,0 m
Frequency		5,725-5,875 GHz						
Gain, Lowband Gain, Midband Gain, Highband		NA NA NA	28,0 dBi 28,1 dBi 28,2 dBi	31,0 dBi 31,1 dBi 31,2 dBi	34,1 dBi 34,2 dBi 34,3 dBi	38,0 dBi 37,1 dBi 38,2 dBi	40,1 dBi 40,2 dBi 40,3 dBi	42,1 dBi 42,2 dBi 42,3 dBi
3 dB beamwidth at midband{4}		NA	5,6º	4,0º	2,8º	1,9º	1,4º	1,15º
F/B{4}		NA	37 dB	42 dB	47 dB	50 dB	52 dB	52 dB
Connector{2}		N-female panel or cable connector or waveguide flange						
VSWR, max		NA	1,5	1,5	1,5	1,3	1,3	1,3
Cross polarization discrimination		NA	25 dB	25 dB	30 dB	30 dB	30 dB	30 dB
Polarisation isolation{1}		NA	24 dB	28 dB	30 dB	30 dB	30 dB	30 dB
Mounting diameter (recommended)		NA	60 mm	60 mm	100 mm	100 mm	100 mm	100 mm
Azimuth / Elevation adjustment{3}		NA	± 5º	± 5º	± 5º	± 5º	± 5º	± 5º
Materials		Aluminium alloy reflector, Hot dip galvanized steel mount, conical glassfiber radome						
Weight (gross/net)		NA	36/18 kg	40/20 kg	87/52 kg	195/99 kg	407/147 kg	467/201 kg
Packing size:	H W D	NA NA NA	100 cm 90 cm 80 cm	130 cm 110 cm 110 cm	154 cm 110 cm 153 cm	167 cm 163 cm 206 cm	249 cm 280 cm 323 cm	330 cm 290 cm 330 cm

{1} For antennas with dual polarization.
{2} Antennas with other connectors available on request.
{3} Elevation adjust option ±10 degrees available.
{4} Both co-polarisation and cross-polarisation radiation pattern envelopes available on request.

Aerial Oy
Box 22
04401 Järvenpää
Finland
Tel. +358 9 2790 120
Fax +358 9 2910 210
http://www.aerial.fi
aerial@aerial.fi

PARABOLIC RADIO RELAY ANTENNAS

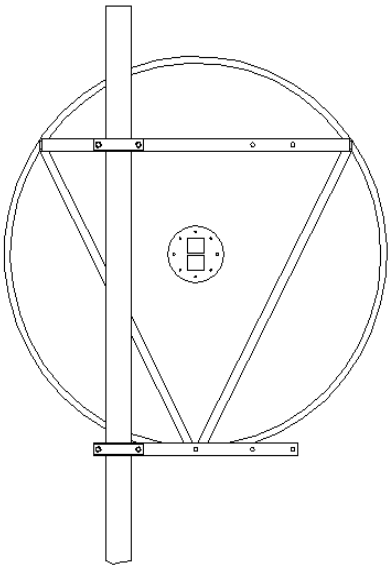

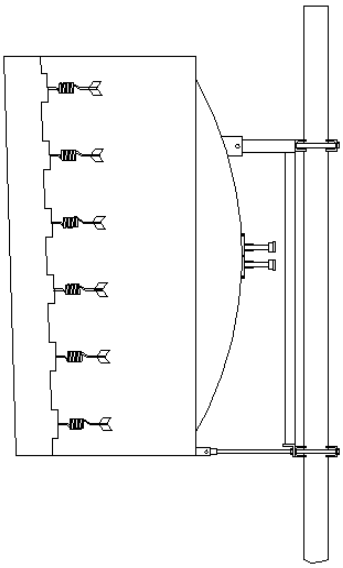

Aerial Oy
Box 22
04401 Järvenpää
Finland
Tel. +358 9 2790 120
Fax +358 9 2910 210
http://www.aerial.fi
aerial@aerial.fi

Table of contents

Introduction

Specifications

Data sheets

Antenna dimensions

Wind force table

Package information

Aerial Oy

Box 22
04401 Järvenpää
Finland

Tel. +358 9 2790 120
Fax +358 9 2910 210

http://www.aerial.fi
aerial@aerial.fi

AERIAL OY PARABOLIC RADIO RELAY ANTENNA PRODUCT LINE

Introduction

Aerial Oy has been supplying antenna products for more than 25 years. Aerial Oy has supplied radio relay antennas from the extreme arctic strong winds of Greenland to the damp moist heat of the Philippines.

Aerial Oy offers the following antenna performance types are available:

Grid
Standard
High Performance
Ultra High Performance
Custom made client specified antennas

The grid antennas are the optimal solution for low capacity routes with low probability of interference. Grid antennas are mainly used in low-population areas where there is no snow or ice.

The standard antenna types are designed from low to medium capacity networks with low or medium interference probability. They are a natural option for grid antennas in areas where the environmental conditions are too heavy for open antenna structures.

High performance antennas are the next antenna category when designing your network in areas with need for higher capacity and probability of interference. They form the backbone of telecommunications networks in many industrial countries.

Ultra high performance antennas are needed when cross polarisation, F/B-ratio or some other electrical properties of normal antenna types are not enough. Ultra high performance antennas are typically high performance antennas with one or more enhanced electrical properties. They are mainly used in the node points of high or very high capacity networks with high interference possibility.

Grid antennas are always used in single polarisation. Standard, high performance and ultra high performance antennas are available with single or two orthogonal polarisations.

Please see the following specifications and data sheets to find the convenient antenna system solution for your network. For special requirements you can always contact Aerial Oy sales or design department to receive a quote on a product made just for your needs.

Aerial Oy

Box 22
04401 Järvenpää
Finland

Tel. +358 9 2790 120
Fax +358 9 2910 210

http://www.aerial.fi
aerial@aerial.fi

SPECIFICATIONS OF RADIO RELAY ANTENNAS MANUFACTURED BY AERIAL OY

Scope

This specification details the characteristics in design, development, production, installation and servicing of radio relay antennas manufactured by Aerial Oy and defines the measurements made in the factory acceptance tests.

General

Antenna Types, Diameters and Frequency Ranges

The frequency ranges of radio relay antennas manufactured by Aerial Oy are presented in Appendix A: Aerial Oy radio relay antennas electrical characteristics. Other frequency ranges can be added on request. Frequency ranges can be attached to each other to form multiband antennas.

The letters in each radio relay antenna unit type name are to be translated as follows:

AU1200-6,8RD
AU=Aerial radio relay antenna unit.
The four following letters indicate the antenna diameter.
The next two to three numbers indicate the frequency range name.
The following letter indicates the performance type of the antenna.
Letter R: The antenna is equipped with shroud ie. the antenna is a High-Performance-antenna and the antenna is equipped with a sheet radome.
Letter S: The antenna is equipped with a comical radome and no shroud ie. the antenna is a Standard-Performance-antenna.
Letter D: The antenna is equipped with orthomode transducer ie. the antenna is capable of operating dual linear orthogonal polarisations (vertical and horisontal polarisations).
Letter G: The antenna is a grid antenna.
Letter LS: Enhanced F/B-ratio (in High-Performance-antennas).
Table 1. gives more information about reflectors.

Type	Diameter	Weight w/ shroud	Weight wo/ Shroud	Focal Length
Microwave	Mm	Kg	kg	Mm
AU300-	300	8	6	125
AU600-	600	20	18	250
AU1200-	1200	62	52	500
AU1800-	1800	117	99	630
AU2400-	2400	180	147	910
AU3000-	3000	254	200	1200

Table 1. Antenna diameters, weights and focal lengths.

The radio relay antenna unit type, antenna diameter, center frequency, frequency range, feed type, radome type and version number must be stated on the product and all documents attached to it.

The radio relay antenna unit consists of reflector, feed and their mounting hardware.Both the reflector and feed have an individual type name to ensure the compatibility and ease of maintainance, it also enables possible uppgrades of the whole antenna unit . These type names depend on reflector type, frequency and flange type among other things.

Environmental Conditions and Tests

The radiorelay antenna equipments manufactured by Aerial Oy meet the following ETS-standards.
The antennas intended for use at non-weatherprotected locations:

STORAGE: ETS 300 019-1-1 class 1.3E
TRANSPORTATION: ETS 300 019-1-2 class 2.3
IN-USE: ETS 300 019-1-4 class 4.1 E

Aerial Oy
Box 22
04401 Järvenpää
Finland
Tel. +358 9 2790 120
Fax +358 9 2910 210
http://www.aerial.fi
aerial@aerial.fi

Unless otherwise stated.

All antenna structures have been tested and designed to withstand these specifications. Some Aerial antennas have been in use for more than 30 years.

Definitions

The following are definitions appearing in this document.

dB	decibel
dBi	decibels over an isotropic antenna
dBm	decibels over a milliwatt

Electrical Characteristics

Electrical characteristics of each antenna unit are stated in antenna product brochures in Appendix A.

Antenna Gain

The gain values are stated at low-, mid- and top-band compared to an isotropic radiator. Gain tolerance is 0,25 dB. The antenna gains indicated in Appendix A must be corrected with values from table 2: Gain reduction caused by different radomes.

CONICAL MOULDED RADOMES (Standard performance antennas)							
Diameter	1,4 GHz	2 GHz	3,9 GHz	7 GHz	11 GHz	15 GHz	18 GHz
Mm							
300	NA	NA	NA	NA	NA	NA	2,1
600	0,1	0,1	0,2	0,3	0,8	1,3	2,3
1200	0,1	0,1	0,2	0,4	1	1,5	2,5
1800	0,1	0,15	0,35	0,7	1,4	1,9	2,9
2400	0,15	0,15	0,4	1	1,8	2	3
3000	0,2	0,2	0,5	1,2	1,9	2,1	NA

CALOTIC MOULDED RADOMES (High performance antennas)							
Diameter	1,4 GHz	2 GHz	3,9 GHz	7 GHz	11 GHz	15 GHz	18 GHz
Mm							
300	NA	NA	NA	NA	NA	NA	2,1
600	0,1	0,1	0,2	0,3	0,8	1,3	2,3
1200	0,1	0,1	0,2	0,4	1	1,5	2,5
1800	0,1	0,15	0,35	0,7	1,4	1,9	2,9
2400	0,15	0,15	0,4	1	1,8	2	3
3000	0,2	0,2	0,5	1,2	1,9	2,1	NA

UV-PROTECTED PVC SHEET RADOMES (High Performance antennas)							
Diameter	1,4 GHz	2 GHz	3,9 GHz	7 GHz	11 GHz	15 GHz	18 GHz
Mm							
300	NA	NA	NA	NA	NA	0,5	0,6
600	NA	NA	NA	<0,1	0,2	0,5	0,6
1200	<0,1	<0,1	<0,1	<0,1	0,2	0,5	0,6
1800	<0,1	<0,1	<0,1	<0,1	0,2	0,5	0,6
2400	<0,1	<0,1	<0,1	<0,1	0,2	0,5	0,6
3000	<0,1	<0,1	<0,1	<0,1	0,2	0,5	NA

TEFLON COATED FIBERGLASS SHEET RADOMES(High Perf. antennas)							
Diameter	1,4 GHz	2 GHz	3,9 GHz	7 GHz	11 GHz	15 GHz	18 GHz
Mm							
300	NA	NA	NA	NA	NA	0,15	0,2
600	NA	NA	NA	<0,1	<0,1	0,15	0,2
1200	<0,1	<0,1	<0,1	<0,1	<0,1	0,15	0,2
1800	<0,1	<0,1	<0,1	<0,1	<0,1	0,15	0,2
2400	<0,1	<0,1	<0,1	<0,1	<0,1	0,15	0,2
3000	<0,1	<0,1	<0,1	<0,1	<0,1	0,15	NA

Table 2: Gain reduction caused by different radomes (NA=not available).

Front-to-back ratio (F/B)

Indicates the highest level of radiation compared to the main beam maximum. Front-to-Back Ratio tolerance from stated values on Appendix A is 3 dB.

Cross Polarization Discrimination (XPD)

Indicates the highest level of cross polarisation compared to the main beam in an angular zone as wide as the half power beam width on the two principal planes.

Reduction of Antenna Gain

Indicates the gain reduction due to a wet radome. The reduction of antenna gain will not exceed 2 dB in frequencies over 15 GHz.

Radiation Pattern Envelope (RPE)

Indicates the worst cases of radiation patterns at the low-,mid and top-band. Both copolar and crosspolar RPE's are represented on request. The tolerance of the RPE's is 3 dB. All RPE:s are according to ITU RF.699.

3 dB Beamwidth (3dB Beam)

Indicates the total angular width between main beam –3 dB points.

Voltage Standing Wave Ratio (VSWR)

The SWR values are quaranteed over the indicated band.

Isolation between Ports (Isolation)

Indicates the isolation between the two orthogonal input ports in dual polarised antennas. This value is quaranteed over the indicated band.

Connector or Flange

Indicates the input RF-connector or flange.

Intermodulation Products

None of the third order intermodulation products measured in the connector of the antenna may alone exceed –116 dBm level when two unmodulated test signals are fed to the connector of the antenna. The level of the test signals is +44 dBm.

Near-field Radiation Patterns

The near field radiation pattern strenght can be calculated for distance $R=2D^2/\lambda$ from formula:

$P_0=0,147/D^2$

D=antenna diameter in meters
P_{in}=1W
λ=wavelenght

At any distance R calculate Δ and multiply P_0 by factor P_D (Achieved from Appendix B).

The Electrical characteristics from 4.1 to 4.9 are stated in the product brochure, 4.4 and other characteristics on request.

Mechanical Characteristics

General

The Appendix C indicates the main dimensions of radio relay antennas manufactured by Aerial Oy.

Materials

The mounts are made of hot dip galvanised steel and the supporting structure is aluminium alloy which is welded to the reflector. The elevation fine adjustment is made of stainless steel. The azimuth fine adjustment is done by turning the antenna in it's mounting tube ie. the azimuth fine adjusment components are made of hot-dip-galvanised steel. All materials used are mentioned in table 3.

Part Name	Material
Mounting Accessories	Fe 37, nuts, bolts and washers 8.8 hot dip galvanised
Feed	A2 stainless steel
Reflector to rim screws	A2 stainless steel
Elevation adjust screw	A2 stainless steel
Antenna frame	Al 99,5
Reflector	Al 99,5
Feed support	Al 99,5
Feed horn	Al 99,5
Shroud	Al 99,5
Waveguide runs with OMT	Cu
(for antennas with waveguides)	Cu
Coating on waveguide and OMT	Sn
Radome	1.UV-protected polyester hartz reinforced fiberglass
	Conical moulded radomes (Standard antennas)
	Calotic moulded radomes (High Performance antennas) 3. UV-protected PVC
	UV-protected PVC-sheet radomes (High Performance antennas) 2. Teflon PTFE coated fiberglass (Option)
	Teflon coated fiberglass sheet radomes (High Performance antennas)

Insulators	UV-stabilised PE
	UV-stabilised POM
	Teflon PTFE
	Glassfiber
	Glassfiber reinforced polycarbonate
Sealants	Silicone

Table 3. The materials of radio relay antennas by Aerial Oy.

Metals in Contact

The metals and alloys used in radio relay antennas manufactured by Aerial Oy are chosen to be as close as possible to each other in electrochemical behaviour. Other corrosion preventive methods used include using coating to limit cathode area and using non metallic spacers.

The list of materials used in radio relay antennas including the chemical composition and their electrochemical potentials are presented in table 4: Metal materials.

Metal	Usage	E(v)	Remarks
Name		V	
Fe37	Mounting	-0,7	Hot-dip Galvanised (Zn)
A4	Feed mounting screws	-0,35	
	Reflector to rim mounting screws	-0,35	
Al 99,5	Relay frame	-0,5	
	Reflector		
	Feed support		
	Feed horn		Anodised
Cu	Feed system with OMT	-0,2	Electrically coated (Sn)
Sn	Feed system coating	-0,2	

Table 4. Metal materials.

Protective Finish

All steel parts are protected by hot-dip galvanising unless they are made of stainless steel. The minimum thickness of the zinc layer is 100 µm. Aluminium parts including the antenna reflectors, feeds and supporting structures are finished with a high performance paint. The thickness of the paint is 20 µm minimum. The detailed surface finish of the different parts of the radio relay antennas manufactured by Aerial Oy are presented in table 5.

Part	Coating
Name	
Mounting	Hot-dip Galvanised (Zn minimum 100 µm)
Feed mounting screws	None
Reflector to rim mounting screws	None
Relay frame	Painted (WISOP minimum 20 µm)
Reflector	Painted (WISOP minimum 20 µm)
Feed support	Painted (WISOP minimum 20 µm)
Feed horn	Anodised then painted (WISOP minimum 20 µm)
Feed system with OMT	Electrically coated with Sn then painted (WISOP minimum 20 µm)

Table 5. Surface finish by part.

Survival Wind Speed and Ice Load

The antennas can withstand a wind speed of 55 m/s (200 km/h) or 50 mm of ice of density 900 kg/m^2 covering all outer surfaces without damage.

Mechanical Stability

The level of the co-polar signal will fall in the worst case 1 dB under the following conditions:
a) a 40 m/s (144 km/h) wind acting in any horisontal direction OR
b) 25 mm of ice of density of 900 kg/m^2 covering all outer surfaces excluding the radome.

The torsional monent caused by wind in different directions is presented in Appendix D.

Alignment Facilities

The standard alignment of radio relay antennas manufactured by Aerial Oy is in azimuth depending on the way it is mounted to the supporting structure (useally more than 20 degrees) and in elevation ± 5 degrees. It is possible to order the antennas with extended alignment option with which the alignment in elevation is ± 10 degrees.

Both single and dual polarisation antenna feeds are rotarable ± 5 degrees.

Waveguide Flanges and Connectors

Table 6 presents the preferred waveguide of each frequency range. All the waveguide flanges are made according to IEC 154-2: Flanges for waveguides. All coaxial connectors are IEC 169 female 7/16. Other connectors and flanges are available on request. Standard flange type is stated in Appendix A. Flange coating is Sn.

Radome

Radome chemical properties are mentioned in table 4. The materials of radio relay antennas offered by Aerial Oy. Mechanically the UV-protected polyester hartz reinforced fiberglass radomes are semi-rigid and much thinner than wavelenght. UV-protected PVC and Teflon PTFE coated fiberglass (Option) radomes are sheet radomes, much thinner than the reinforced fiberglass radomes. Teflon prevents the water forming a constant thickness layer on the radome surface. The sheet radomes typically vibrate when in use and that way avoid accumulation of snow and ice. All the radome types mentioned above have a exprimental average lifetime of 25 years. Data of sheet radomes is in Appendix E.

Pressurisation

Antenna feeds which are pressurissable are tested with a pressure of 100 kPa and placed in a water tank to detect any leakage through tuning holes, flange connections etc. Any visible leakage in this test will result to rejection of the feed. The maximum air pressure to be applied to the antenna feed is 50 kPa and the optimum working pressure is 20 kPa.

Installation and Maintenance

The standard mounting diameter of Aerial Oy radio relay antenna is 100 mm. Other mounting diameters are available as an option. It is possible to change the polarisation plane, replace the feed and replace the radome without lowering the antenna to ground. All nuts and bolts are of metric standard size. All antenna mountings can be done reliably with normal hand and power tools. An installation guide is available for each product.

When an antenna has more than one input/output they are all marked individually. These markings must include atleast the following: Frequency range, antenna or port name, polarisation and serial number. For mounting dimensions see Appendix F.

Quality Control and Factory Tests

Aerial Oy has a policy, that no antenna product leaves it's facilities unmeasured. This policy is being carried out to the fullest extent.

Aerial Oy has several anologue network analysers, waveguide bridges up to 40 GHz, two HP 8510 and two HP 8714 network analysers and several transmitters and receivers for radiation pattern measurements. The radiation patterns are recorded with the help of computer controlled turntable. Smaller antennas can be measured indoors.

Quality Control and Factory Tests: Design

First in the design process the objectives are set. During the design process the radiation patterns, isolation, matching and all other electrical properties of the prototype are measured and they must be at least 5-20 % better than the same properties in the completed product. Extra attention is focused on structural durability and long product lifetime achieved with low environmental load.

The primary radition patterns are first attained by modelling the structure and then calculating the radiation patterns. The same method is used when during the design process the radiation patterns are adapted. The radiation patterns of completed product are measured or calculated using more precise modeling.

Quality Control and Factory Tests: Materials

The materials used in antenna products manufactured by Aerial Oy are chosen from well known subsuppliers. The main parameters when selecting the material are: Availability, material similarity and material quality. The main materials used are hot dip galvanised steel, stainless steel or aluminium alloy. These metals are selected to be as suitable as possible to their in-use environment. All insulating materials are made of UV-resistant plastic or fiberglass.

Quality Control and Factory Tests: Feed

Waveguide runs are all bended in a computer controlled bending machine using preprogrammed bending procedures. This method ensures that all the bends are mechanically similar and the tuning process is easier to perform. Each flange is silver soldered using a specially designed jig. Then the waveguides are surface coated and tuned using a waveguide bridge and a network analyser. The OMT's are first pretuned and then they are connected to the waveguides using another jig to ensure the similarity of all manufactured feeds. After this the final tuning process is initiated. Once the whole feed tuned all the tuning screws are sealed by soldering. After the feed has passed all the electrical tests it will be checked visually.

The parts requiring the most precision ie. the OMT and the feedhorn are done by computer aided machining.

Antenna feeds which are pressurissable are tested with a pressure of 100 kPa and placed in a water tank to detect any leakage through tuning holes, flange connections etc. Any visible leakage in this test will result to rejection of the feed.

Quality Control and Factory Tests: Reflector and Supporting Structure

Reflector and the supporting structure are put together using large steel jigs to ensure the mechanical and electrical similarity. They are all numbered and a book is being kept of the makers.

Quality Control and Factory Tests: Radome

Radomes are being checked as any other goods that are bought outside. They are being checked visually and also the material similarity is controlled.

Quality Control and Factory Tests: Protective Finish

All steel parts are protected by hot-dip galvanising unless they are made of stainless steel. The minimum thickness of the zinc layer is 100 µm. Outer aluminium antenna parts are finished with a high performance paint. The thickness of the paint is 20 µm minimum.

Quality Control and Factory Tests: Mounting Accessories

Mounting accessories are precision welded by class welders using jigs to ensure the dimensional similarity. Useally the radio relay antennas and the mounting accessories are attached to each other at the factory. That way the compatibility is assured best.

Quality Control and Factory Tests: Packaging

The radio relay antenna is completed by installing the mounting accessories to the antenna frame. This entity is then packed to a open wooden box. These boxes are made especially for each antenna diameter. The feed is packed in to a smaller box. Then this box is attached to the larger one. Also closed packaging structures are available on request.

Quality Control and Factory Tests: Maintainance

Aerial Oy quarantees that spare parts and maintainance is available for these antenna products for at least 10 years. The antennas are designed to be maintainance free for their expected lifetime of 25 years. All the environmental conditions mentioned in the ETS-standards (Chapter 2.2) must have been met since the antennas have been delivered to customer.

Quality Control and Factory Tests: Quarantee

The radio relay antennas have a quarantee of 2 years.

Production Measurements

1)Visual check:
a) The radome surfaces and paint surfaces are controlled.
b) The connectors and connections are checked.
c) Type name, frequency range, serial number and all other markings on antenna, antenna documents and antenna packaging is checked.
2)SWR-measurement is printed and stored based on serial number (Available to customer if needed). All antenna impedance-measurements from the same lot must locate in the same area on the Smith-chart and/or be identical on SWR-display. Any deviations must be explained and examined allthough the antenna would meet SWR-requirements.
3)The product is mechanically vibrated while SWR is measured to double-check it for any loose connections.

Other measurement can be added on request.

Additional Information

The following domestic customers have been using radio relay antennas manufactured by Aerial Oy: The Finnish Defence Forces, Nokia, Ericsson, Siemens, Finnet Group, Radiolinja and Sonera. Foreign customers include Tele Greenland, Bite GSM and Radiolinja Eesti. Aerial Oy radio relay antennas are being manufactured under licence in India for the local markets.

1,37…1,45 GHz

Model	Size Diam. mm	Gain Low dBi	Gain Mid dBi	Gain High dBi	Front-to-back dB	X-pol discr. dB	Beam width ° (-3 dB)	SWR VSWR Max	Inter port Isolation dB (1)	Connector Flange (2)	Mount Diam. mm	Elev. adj. ° (3)
Standard												
AU 1200-1,4	1200	22,5	22,7	22,9	(4)	(4)	12,1°	1,30	-	7/8" EIA	100	±5
AU 1800-1,4	1800	26,0	26,2	26,4	(4)	(4)	8,0°	1,30	-	7/8" EIA	100	±5
AU 2400-1,4	2400	28,5	28,7	28,9	(4)	(4)	6,2°	1,30	-	7/8" EIA	100	±5
AU 3000-1,4	3000	30,4	30,7	30,9	(4)	(4)	4,7°	1,30	-	7/8" EIA	100	±5
High performance												
AU 1200-1,4 R	1200	22,5	22,7	22,9	(4)	(4)	12,1°	1,30	-	7/8" EIA	100	±5
AU 1800-1,4 R	1800	26,0	26,2	26,4	(4)	(4)	8,0°	1,30	-	7/8" EIA	100	±5
AU 2400-1,4 R	2400	28,5	28,7	28,9	(4)	(4)	6,2°	1,30	-	7/8" EIA	100	±5
AU 3000-1,4 R	3000	30,4	30,7	30,9	(4)	(4)	4,7°	1,30	-	7/8" EIA	100	±5
Standard dual polarized												
AU 1200-1,4 D	1200	22,5	22,7	22,9	(4)	(4)	12,1°	1,30	25	7/8" EIA	100	±5
AU 1800-1,4 D	1800	26,0	26,2	26,4	(4)	(4)	8,0°	1,30	25	7/8" EIA	100	±5
AU 2400-1,4 D	2400	28,5	28,7	28,9	(4)	(4)	6,2°	1,30	28	7/8" EIA	100	±5
AU 3000-1,4 D	3000	30,4	30,7	30,9	(4)	(4)	4,7°	1,30	30	7/8" EIA	100	±5
High performance dual polarized												
AU 1200-1,4 RD	1200	22,5	22,7	22,9	(4)	(4)	12,1°	1,30	25	7/8" EIA	100	±5
AU 1800-1,4 RD	1800	26,0	26,2	26,4	(4)	(4)	8,0°	1,30	25	7/8" EIA	100	±5
AU 2400-1,4 RD	2400	28,5	28,7	28,9	(4)	(4)	6,2°	1,30	28	7/8" EIA	100	±5
AU 3000-1,4 RD	3000	30,4	30,7	30,9	(4)	(4)	4,7°	1,30	30	7/8" EIA	100	±5

Notes

(1) For antennas with dual polarization
(2) Antennas with other connectors available on request
(3) Elevation adjust option ±10 degrees available
(4) Both co-polarisation and cross-polarisation radiation pattern envelopes available on request

Aerial Oy
Box 22
04401 Järvenpää, FINLAND

Tel. +358 9 2790 120
Fax +358 9 2910 210

http://www.aerial.fi
aerial@aerial.fi
firstname.surname@aerial.fi

1,42…1,54 GHz

Model	Size Diam. mm	Gain Low dBi	Gain Mid dBi	Gain High dBi	Front-to-back dB	X-pol discr. dB	Beam width ° (-3 dB)	SWR VSWR Max	Inter port Isolation dB (1)	Connector Flange (2)	Mount Diam. mm	Elev. adj. ° (3)
Standard												
AU 1200-1,5	1200	22,8	23,2	23,6	(4)	(4)	11,5°	1,30	-	7/8" EIA	100	±5
AU 1800-1,5	1800	26,3	26,6	27,0	(4)	(4)	7,7°	1,30	-	7/8" EIA	100	±5
AU 2400-1,5	2400	28,8	29,1	29,5	(4)	(4)	6,1°	1,30	-	7/8" EIA	100	±5
AU 3000-1,5	3000	30,7	31,1	31,4	(4)	(4)	4,7°	1,30	-	7/8" EIA	100	±5
High performance												
AU 1200-1,5 R	1200	22,8	23,2	23,6	(4)	(4)	11,5°	1,30	-	7/8" EIA	100	±5
AU 1800-1,5 R	1800	26,3	26,6	27,0	(4)	(4)	7,7°	1,30	-	7/8" EIA	100	±5
AU 2400-1,5 R	2400	28,8	29,1	29,5	(4)	(4)	6,1°	1,30	-	7/8" EIA	100	±5
AU 3000-1,5 R	3000	30,7	31,1	31,4	(4)	(4)	4,7°	1,30	-	7/8" EIA	100	±5
Standard dual polarized												
AU 1200-1,5 D	1200	22,8	23,2	23,6	(4)	(4)	11,5°	1,30	25	7/8" EIA	100	±5
AU 1800-1,5 D	1800	26,3	26,6	27,0	(4)	(4)	7,7°	1,30	25	7/8" EIA	100	±5
AU 2400-1,5 D	2400	28,8	29,1	29,5	(4)	(4)	6,1°	1,30	28	7/8" EIA	100	±5
AU 3000-1,5 D	3000	30,7	31,1	31,4	(4)	(4)	4,7°	1,30	30	7/8" EIA	100	±5
High performance dual polarized												
AU 1200-1,5 RD	1200	22,8	23,2	23,6	(4)	(4)	11,5°	1,30	25	7/8" EIA	100	±5
AU 1800-1,5 RD	1800	26,3	26,6	27,0	(4)	(4)	7,7°	1,30	25	7/8" EIA	100	±5
AU 2400-1,5 RD	2400	28,8	29,1	29,5	(4)	(4)	6,1°	1,30	28	7/8" EIA	100	±5
AU 3000-1,5 RD	3000	30,7	31,1	31,4	(4)	(4)	4,7°	1,30	30	7/8" EIA	100	±5

Notes

(1) For antennas with dual polarization
(2) Antennas with other connectors available on request
(3) Elevation adjust option ±10 degrees available
(4) Both co-polarisation and cross-polarisation radiation pattern envelopes available on request

Aerial Oy
Box 22
04401 Järvenpää, FINLAND

Tel. +358 9 2790 120
Fax +358 9 2910 210

http://www.aerial.fi
aerial@aerial.fi
firstname.surname@aerial.fi

1,7…2,1 GHz

Model	Size Diam. mm	Gain Low dBi	Gain Mid dBi	Gain High dBi	Front-to-back dB	X-pol discr. dB	Beam width ° (-3 dB)	SWR VSWR Max	Inter port Isolation dB (1)	Connector Flange (2)	Mount Diam. mm	Elev. adj. ° (3)
Standard												
AU 1200-1,9	1200	24,3	25,3	26,2	(4)	(4)	8,9°	1,30	-	7/8" EIA	100	±5
AU 1800-1,9	1800	27,8	28,8	29,7	(4)	(4)	6,0°	1,20	-	7/8" EIA	100	±5
AU 2400-1,9	2400	30,3	31,3	32,2	(4)	(4)	4,4°	1,20	-	7/8" EIA	100	±5
AU 3000-1,9	3000	32,3	33,2	34,1	(4)	(4)	3,7°	1,15	-	7/8" EIA	100	±5
High performance												
AU 1200-1,9 R	1200	24,3	25,3	26,2	(4)	(4)	8,9°	1,30	-	7/8" EIA	100	±5
AU 1800-1,9 R	1800	27,8	28,8	29,7	(4)	(4)	6,0°	1,20	-	7/8" EIA	100	±5
AU 2400-1,9 R	2400	30,3	31,3	32,2	(4)	(4)	4,4°	1,20	-	7/8" EIA	100	±5
AU 3000-1,9 R	3000	32,3	33,2	34,1	(4)	(4)	3,7°	1,15	-	7/8" EIA	100	±5
Standard dual polarized												
AU 1200-1,9 D (5)	1200	24,3	25,3	26,2	(4)	(4)	8,9°	1,30	25	7/8" EIA	100	±5
AU 1800-1,9 D (5)	1800	27,8	28,8	29,7	(4)	(4)	6,0°	1,20	25	7/8" EIA	100	±5
AU 2400-1,9 D (5)	2400	30,3	31,3	32,2	(4)	(4)	4,4°	1,20	28	7/8" EIA	100	±5
AU 3000-1,9 D (5)	3000	32,3	33,2	34,1	(4)	(4)	3,7°	1,20	30	7/8" EIA	100	±5
High performance dual polarized												
AU 1200-1,9 RD (5)	1200	24,3	25,3	26,2	(4)	(4)	8,9°	1,30	25	7/8" EIA	100	±5
AU 1800-1,9 RD (5)	1800	27,8	28,8	29,7	(4)	(4)	6,0°	1,20	25	7/8" EIA	100	±5
AU 2400-1,9 RD (5)	2400	30,3	31,3	32,2	(4)	(4)	4,4°	1,20	28	7/8" EIA	100	±5
AU 3000-1,9 RD (5)	3000	32,3	33,2	34,1	(4)	(4)	3,7°	1,20	30	7/8" EIA	100	±5

Notes

(1) For antennas with dual polarization
(2) Antennas with other connectors available on request
(3) Elevation adjust option ±10 degrees available
(4) Both co-polarisation and cross-polarisation radiation pattern envelopes available on request
(5) Any 200 MHz band between the indicated frequency range

Aerial Oy
Box 22
04401 Järvenpää, FINLAND

Tel. +358 9 2790 120
Fax +358 9 2910 210

http://www.aerial.fi
aerial@aerial.fi
firstname.surname@aerial.fi

1,9…2,3 GHz

Model	Size Diam. mm	Gain Low dBi	Gain Mid dBi	Gain High dBi	Front-to-back dB	X-pol discr. dB	Beam width ° (-3 dB)	SWR VSWR Max	Inter port Isolation dB (1)	Connector Flange (2)	Mount Diam. mm	Elev. adj. ° (3)
Standard												
AU 1200-2,1	1200	25,3	26,2	27,0	(4)	(4)	8,2°	1,30	-	7/8" EIA	100	±5
AU 1800-2,1	1800	28,8	29,7	30,5	(4)	(4)	5,5°	1,20	-	7/8" EIA	100	±5
AU 2400-2,1	2400	31,3	32,2	33,0	(4)	(4)	4,1°	1,20	-	7/8" EIA	100	±5
AU 3000-2,1	3000	33,2	34,1	34,9	(4)	(4)	3,3°	1,15	-	7/8" EIA	100	±5
High performance												
AU 1200-2,1 R	1200	25,3	26,2	27,0	(4)	(4)	8,2°	1,30	-	7/8" EIA	100	±5
AU 1800-2,1 R	1800	28,8	29,7	30,5	(4)	(4)	5,5°	1,20	-	7/8" EIA	100	±5
AU 2400-2,1 R	2400	31,3	32,2	33,0	(4)	(4)	4,1°	1,20	-	7/8" EIA	100	±5
AU 3000-2,1 R	3000	33,2	34,1	34,9	(4)	(4)	3,3°	1,15	-	7/8" EIA	100	±5
Standard dual polarized												
AU 1200-2,1 D (5)	1200	25,3	26,2	27,0	(4)	(4)	8,2°	1,30	25	7/8" EIA	100	±5
AU 1800-2,1 D (5)	1800	28,8	29,7	30,5	(4)	(4)	5,5°	1,20	25	7/8" EIA	100	±5
AU 2400-2,1 D (5)	2400	31,3	32,2	33,0	(4)	(4)	4,1°	1,20	28	7/8" EIA	100	±5
AU 3000-2,1 D (5)	3000	33,2	34,1	34,9	(4)	(4)	3,3°	1,15	30	7/8" EIA	100	±5
High performance dual polarized												
AU 1200-2,1 RD (5)	1200	25,3	26,2	27,0	(4)	(4)	8,2°	1,30	25	7/8" EIA	100	±5
AU 1800-2,1 RD (5)	1800	28,8	29,7	30,5	(4)	(4)	5,5°	1,20	25	7/8" EIA	100	±5
AU 2400-2,1 RD (5)	2400	31,3	32,2	33,0	(4)	(4)	4,1°	1,20	28	7/8" EIA	100	±5
AU 3000-2,1 RD (5)	3000	33,2	34,1	34,9	(4)	(4)	3,3°	1,15	30	7/8" EIA	100	±5

Notes

(1) For antennas with dual polarization
(2) Antennas with other connectors available on request
(3) Elevation adjust option ±10 degrees available
(4) Both co-polarisation and cross-polarisation radiation pattern envelopes available on request
(5) Any 200 MHz band between the indicated frequency range

Aerial Oy
Box 22
04401 Järvenpää, FINLAND

Tel. +358 9 2790 120
Fax +358 9 2910 210

http://www.aerial.fi
aerial@aerial.fi
firstname.surname@aerial.fi

2,1…2,4 GHz

Model	Size Diam. mm	Gain Low dBi	Gain Mid dBi	Gain High dBi	Front-to-back dB	X-pol discr. dB	Beam width ° (-3 dB)	SWR VSWR Max	Inter port Isolation dB (1)	Connector Flange (2)	Mount Diam. mm	Elev. adj. ° (3)
Standard												
AU 1200-2,3	1200	26,2	26,8	27,4	(4)	(4)	7,5°	1,30	-	7/8" EIA	100	±5
AU 1800-2,3	1800	29,7	30,3	30,9	(4)	(4)	4,7°	1,20	-	7/8" EIA	100	±5
AU 2400-2,3	2400	32,2	32,8	33,4	(4)	(4)	3,9°	1,20	-	7/8" EIA	100	±5
AU 3000-2,3	3000	34,1	34,7	35,3	(4)	(4)	3,1°	1,15	-	7/8" EIA	100	±5
High performance												
AU 1200-2,3 R	1200	26,2	26,8	27,4	(4)	(4)	7,5°	1,30	-	7/8" EIA	100	±5
AU 1800-2,3 R	1800	29,7	30,3	30,9	(4)	(4)	4,7°	1,20	-	7/8" EIA	100	±5
AU 2400-2,3 R	2400	32,2	32,8	33,4	(4)	(4)	3,9°	1,20	-	7/8" EIA	100	±5
AU 3000-2,3 R	3000	34,1	34,7	35,3	(4)	(4)	3,1°	1,15	-	7/8" EIA	100	±5
Standard dual polarized												
AU 1200-2,3 D (5)	1200	26,2	26,8	27,4	(4)	(4)	7,5°	1,30	25	7/8" EIA	100	±5
AU 1800-2,3 D (5)	1800	29,7	30,3	30,9	(4)	(4)	4,7°	1,20	25	7/8" EIA	100	±5
AU 2400-2,3 D (5)	2400	32,2	32,8	33,4	(4)	(4)	3,9°	1,20	28	7/8" EIA	100	±5
AU 3000-2,3 D (5)	3000	34,1	34,7	35,3	(4)	(4)	3,1°	1,15	30	7/8" EIA	100	±5
High performance dual polarized												
AU 1200-2,3 RD (5)	1200	26,2	26,8	27,4	(4)	(4)	7,5°	1,30	25	7/8" EIA	100	±5
AU 1800-2,3 RD (5)	1800	29,7	30,3	30,9	(4)	(4)	4,7°	1,20	25	7/8" EIA	100	±5
AU 2400-2,3 RD (5)	2400	32,2	32,8	33,4	(4)	(4)	3,9°	1,20	28	7/8" EIA	100	±5
AU 3000-2,3 RD (5)	3000	34,1	34,7	35,3	(4)	(4)	3,1°	1,15	30	7/8" EIA	100	±5

Notes

(1) For antennas with dual polarization
(2) Antennas with other connectors available on request
(3) Elevation adjust option ±10 degrees available
(4) Both co-polarisation and cross-polarisation radiation pattern envelopes available on request
(5) Any 200 MHz band between the indicated frequency range

Aerial Oy
Box 22
04401 Järvenpää, FINLAND

Tel. +358 9 2790 120
Fax +358 9 2910 210

http://www.aerial.fi
aerial@aerial.fi
firstname.surname@aerial.fi

2,3…2,5 GHz

Model	Size Diam. mm	Gain Low dBi	Gain Mid dBi	Gain High dBi	Front-to-back dB	X-pol discr. dB	Beam width ° (-3 dB)	SWR VSWR Max	Inter port Isolation dB (1)	Connector Flange (2)	Mount Diam. mm	Elev. adj. ° (3)
Standard												
AU 1200-2,4	1200	27,0	27,3	27,6	(4)	(4)	6,9°	1,30	-	7/8" EIA	100	±5
AU 1800-2,4	1800	30,5	30,8	31,1	(4)	(4)	4,7°	1,20	-	7/8" EIA	100	±5
AU 2400-2,4	2400	33,0	33,3	33,6	(4)	(4)	3,5°	1,20	-	7/8" EIA	100	±5
AU 3000-2,4	3000	34,9	35,3	35,6	(4)	(4)	3,0°	1,15	-	7/8" EIA	100	±5
High performance												
AU 1200-2,4 R	1200	27,0	27,3	27,6	(4)	(4)	6,9°	1,30	-	7/8" EIA	100	±5
AU 1800-2,4 R	1800	30,5	30,8	31,1	(4)	(4)	4,7°	1,20	-	7/8" EIA	100	±5
AU 2400-2,4 R	2400	33,0	33,3	33,6	(4)	(4)	3,5°	1,20	-	7/8" EIA	100	±5
AU 3000-2,4 R	3000	34,9	35,3	35,6	(4)	(4)	3,0°	1,15	-	7/8" EIA	100	±5
Standard dual polarized												
AU 1200-2,4 D	1200	27,0	27,3	27,6	(4)	(4)	6,9°	1,30	25	7/8" EIA	100	±5
AU 1800-2,4 D	1800	30,5	30,8	31,1	(4)	(4)	4,7°	1,20	25	7/8" EIA	100	±5
AU 2400-2,4 D	2400	33,0	33,3	33,6	(4)	(4)	3,5°	1,20	28	7/8" EIA	100	±5
AU 3000-2,4 D	3000	34,9	35,3	35,6	(4)	(4)	3,0°	1,15	30	7/8" EIA	100	±5
High performance dual polarized												
AU 1200-2,4 RD	1200	27,0	27,3	27,6	(4)	(4)	6,9°	1,30	25	7/8" EIA	100	±5
AU 1800-2,4 RD	1800	30,5	30,8	31,1	(4)	(4)	4,7°	1,20	25	7/8" EIA	100	±5
AU 2400-2,4 RD	2400	33,0	33,3	33,6	(4)	(4)	3,5°	1,20	28	7/8" EIA	100	±5
AU 3000-2,4 RD	3000	34,9	35,3	35,6	(4)	(4)	3,0°	1,15	30	7/8" EIA	100	±5

Notes

(1) For antennas with dual polarization
(2) Antennas with other connectors available on request
(3) Elevation adjust option ±10 degrees available
(4) Both co-polarisation and cross-polarisation radiation pattern envelopes available on request

Aerial Oy
Box 22
04401 Järvenpää, FINLAND

Tel. +358 9 2790 120
Fax +358 9 2910 210

http://www.aerial.fi
aerial@aerial.fi
firstname.surname@aerial.fi

2,48…2,7 GHz

Model	Size Diam. mm	Gain Low dBi	Gain Mid dBi	Gain High dBi	Front-to-back dB	X-pol discr. dB	Beam width ° (-3 dB)	SWR VSWR Max	Inter port Isolation dB (1)	Connector Flange (2)	Mount Diam. mm	Elev. adj. ° (3)
Standard												
AU 1200-2,6	1200	27,6	28,0	28,4	(4)	(4)	6,1°	1,30	-	7/8" EIA	100	±5
AU 1800-2,6	1800	31,1	31,5	31,9	(4)	(4)	4,6°	1,20	-	7/8" EIA	100	±5
AU 2400-2,6	2400	33,6	34,0	34,4	(4)	(4)	3,1°	1,20	-	7/8" EIA	100	±5
AU 3000-2,6	3000	35,5	35,9	36,3	(4)	(4)	2,7°	1,15	-	7/8" EIA	100	±5
High performance												
AU 1200-2,6 R	1200	27,6	28,0	28,4	(4)	(4)	6,1°	1,30	-	7/8" EIA	100	±5
AU 1800-2,6 R	1800	31,1	31,5	31,9	(4)	(4)	4,6°	1,20	-	7/8" EIA	100	±5
AU 2400-2,6 R	2400	33,6	34,0	34,4	(4)	(4)	3,1°	1,20	-	7/8" EIA	100	±5
AU 3000-2,6 R	3000	35,5	35,9	36,3	(4)	(4)	2,7°	1,15	-	7/8" EIA	100	±5
Standard dual polarized												
AU 1200-2,6 D	1200	27,6	28,0	28,4	(4)	(4)	6,1°	1,30	25	7/8" EIA	100	±5
AU 1800-2,6 D	1800	31,1	31,5	31,9	(4)	(4)	4,6°	1,20	25	7/8" EIA	100	±5
AU 2400-2,6 D	2400	33,6	34,0	34,4	(4)	(4)	3,1°	1,20	28	7/8" EIA	100	±5
AU 3000-2,6 D	3000	35,5	35,9	36,3	(4)	(4)	2,7°	1,15	30	7/8" EIA	100	±5
High performance dual polarized												
AU 1200-2,6 RD	1200	27,6	28,0	28,4	(4)	(4)	6,1°	1,30	25	7/8" EIA	100	±5
AU 1800-2,6 RD	1800	31,1	31,5	31,9	(4)	(4)	4,6°	1,20	25	7/8" EIA	100	±5
AU 2400-2,6 RD	2400	33,6	34,0	34,4	(4)	(4)	3,1°	1,20	28	7/8" EIA	100	±5
AU 3000-2,6 RD	3000	35,5	35,9	36,3	(4)	(4)	2,7°	1,15	30	7/8" EIA	100	±5

Notes

(1) For antennas with dual polarization

(2) Antennas with other connectors available on request

(3) Elevation adjust option ±10 degrees available

(4) Both co-polarisation and cross-polarisation radiation pattern envelopes available on request

Aerial Oy
Box 22
04401 Järvenpää, FINLAND

Tel. +358 9 2790 120
Fax +358 9 2910 210

http://www.aerial.fi
aerial@aerial.fi
firstname.surname@aerial.fi

3,6…4,2 GHz

Model	Size Diam. mm	Gain Low dBi	Gain Mid dBi	Gain High dBi	Front-to-back dB	X-pol discr. dB	Beam width ° (-3 dB)	SWR VSWR Max	Inter port Isolation dB (1)	Connector Flange (2)	Mount Diam. mm	Elev. adj. ° (3)
Standard												
AU 1200-3,9	1200	30,8	31,5	32,2	(4)	(4)	4,2°	1,20	-	PDR 40	100	±5
AU 1800-3,9	1800	34,4	35,1	35,7	(4)	(4)	2,9°	1,20	-	PDR 40	100	±5
AU 2400-3,9	2400	36,9	37,5	38,2	(4)	(4)	2,3°	1,15	-	PDR 40	100	±5
AU 3000-3,9	3000	38,8	39,5	40,1	(4)	(4)	1,8°	1,15	-	PDR 40	100	±5
High performance												
AU 1200-3,9 R	1200	30,8	31,5	32,2	(4)	(4)	4,2°	1,20	-	PDR 40	100	±5
AU 1800-3,9 R	1800	34,4	35,1	35,7	(4)	(4)	2,9°	1,20	-	PDR 40	100	±5
AU 2400-3,9 R	2400	36,9	37,5	38,2	(4)	(4)	2,3°	1,15	-	PDR 40	100	±5
AU 3000-3,9 R	3000	38,8	39,5	40,1	(4)	(4)	1,8°	1,15	-	PDR 40	100	±5
Standard dual polarized												
AU 1200-3,9 D (5)	1200	30,8	31,5	32,2	(4)	(4)	4,2°	1,20	25	PDR 40	100	±5
AU 1800-3,9 D (5)	1800	34,4	35,1	35,7	(4)	(4)	2,9°	1,20	25	PDR 40	100	±5
AU 2400-3,9 D (5)	2400	36,9	37,5	38,2	(4)	(4)	2,3°	1,15	28	PDR 40	100	±5
AU 3000-3,9 D (5)	3000	38,8	39,5	40,1	(4)	(4)	1,8°	1,15	30	PDR 40	100	±5
High performance dual polarized												
AU 1200-3,9 RD (5)	1200	30,8	31,5	32,2	(4)	(4)	4,2°	1,20	25	PDR 40	100	±5
AU 1800-3,9 RD (5)	1800	34,4	35,1	35,7	(4)	(4)	2,9°	1,20	25	PDR 40	100	±5
AU 2400-3,9 RD (5)	2400	36,9	37,5	38,2	(4)	(4)	2,3°	1,15	28	PDR 40	100	±5
AU 3000-3,9 RD (5)	3000	38,8	39,5	40,1	(4)	(4)	1,8°	1,15	30	PDR 40	100	±5

Notes

(1) For antennas with dual polarization
(2) Antennas with other connectors available on request
(3) Elevation adjust option ±10 degrees available
(4) Both co-polarisation and cross-polarisation radiation pattern envelopes available on request
(5) Any 200 MHz band between the indicated frequency range

Aerial Oy
Box 22
04401 Järvenpää, FINLAND

Tel. +358 9 2790 120
Fax +358 9 2910 210

http://www.aerial.fi
aerial@aerial.fi
firstname.surname@aerial.fi

6,425…7,125 GHz

Model	Size Diam. mm	Gain Low dBi	Gain Mid dBi	Gain High dBi	Front-to-back dB	X-pol discr. dB	Beam width ° (-3 dB)	SWR VSWR Max	Inter port Isolation dB (1)	Connector Flange (2)	Mount Diam. mm	Elev. adj. ° (3)
Standard (5)												
AU 1200-6,8	1200	35,6	36,0	36,5	(4)	(4)	2,5°	1,20	-	PDR 70	100	±5
AU 1800-6,8	1800	39,1	39,6	40,0	(4)	(4)	1,7°	1,15	-	PDR 70	100	±5
AU 2400-6,8	2400	41,6	42,1	42,5	(4)	(4)	1,3°	1,15	-	PDR 70	100	±5
AU 3000-6,8	3000	43,5	44,0	44,5	(4)	(4)	1,0°	1,10	-	PDR 70	100	±5
High performance												
AU 1200-6,8 R	1200	35,9	36,3	36,8	(4)	(4)	2,5°	1,20	-	PDR 70	100	±5
AU 1800-6,8 R	1800	39,4	39,9	40,3	(4)	(4)	1,7°	1,15	-	PDR 70	100	±5
AU 2400-6,8 R	2400	41,9	42,4	42,8	(4)	(4)	1,3°	1,15	-	PDR 70	100	±5
AU 3000-6,8 R	3000	43,8	44,3	44,8	(4)	(4)	1,0°	1,10	-	PDR 70	100	±5
Standard dual polarized (5)												
AU 1200-6,8 D	1200	35,6	36,0	36,5	(4)	(4)	2,5°	1,20	25	PDR 70	100	±5
AU 1800-6,8 D	1800	39,1	39,6	40,0	(4)	(4)	1,7°	1,15	27	PDR 70	100	±5
AU 2400-6,8 D	2400	41,6	42,1	42,5	(4)	(4)	1,3°	1,15	30	PDR 70	100	±5
AU 3000-6,8 D	3000	43,5	44,0	44,5	(4)	(4)	1,0°	1,10	30	PDR 70	100	±5
High performance dual polarized												
AU 1200-6,8 RD	1200	35,9	36,3	36,8	(4)	(4)	2,5°	1,20	25	PDR 70	100	±5
AU 1800-6,8 RD	1800	39,4	39,9	40,3	(4)	(4)	1,7°	1,15	27	PDR 70	100	±5
AU 2400-6,8 RD	2400	41,9	42,4	42,8	(4)	(4)	1,3°	1,15	30	PDR 70	100	±5
AU 3000-6,8 RD	3000	43,8	44,3	44,8	(4)	(4)	1,0°	1,10	30	PDR 70	100	±5

Notes

(1) For antennas with dual polarization

(2) Antennas with other connectors available on request

(3) Elevation adjust option ±10 degrees available

(4) Both co-polarisation and cross-polarisation radiation pattern envelopes available on request

(5) Antenna gain values given for standard antennas are a fraction lower compared to the high performance models due to attenuation caused by conical fiber glass radome at this frequency

Aerial Oy
Box 22
04401 Järvenpää, FINLAND

Tel. +358 9 2790 120
Fax +358 9 2910 210

http://www.aerial.fi
aerial@aerial.fi
firstname.surname@aerial.fi

7,125…7,750 GHz

Model	Size Diam. mm	Gain Low dBi	Gain Mid dBi	Gain High dBi	Front-to-back dB	X-pol discr. dB	Beam width ° (-3 dB)	SWR VSWR Max	Inter port Isolation dB (1)	Connector Flange (2)	Mount Diam. mm	Elev. adj. ° (3)
Standard (5)												
AU 600-7	600	30,4	30,7	31,1	(4)	(4)	4,3°	1,20	-	PDR 70	100	±5
AU 1200-7	1200	36,4	36,7	37,1	(4)	(4)	2,2°	1,15	-	PDR 70	100	±5
AU 1800-7	1800	39,9	40,3	40,6	(4)	(4)	1,5°	1,15	-	PDR 70	100	±5
AU 2400-7	2400	42,4	42,7	43,1	(4)	(4)	1,1°	1,10	-	PDR 70	100	±5
AU 3000-7	3000	44,4	44,7	45,1	(4)	(4)	0,9°	1,10	-	PDR 70	100	±5
High performance												
AU 600-7 R	600	30,8	31,1	31,5	(4)	(4)	4,3°	1,20	-	PDR 70	100	±5
AU 1200-7 R	1200	36,8	37,1	37,5	(4)	(4)	2,2°	1,15	-	PDR 70	100	±5
AU 1800-7 R	1800	40,3	40,7	41,0	(4)	(4)	1,5°	1,15	-	PDR 70	100	±5
AU 2400-7 R	2400	42,8	43,1	43,5	(4)	(4)	1,1°	1,10	-	PDR 70	100	±5
AU 3000-7 R	3000	44,8	45,1	45,5	(4)	(4)	0,9°	1,10	-	PDR 70	100	±5
Standard dual polarized (5)												
AU 600-7 D	600	30,4	30,7	31,1	(4)	(4)	4,3°	1,20	24	PDR 70	100	±5
AU 1200-7 D	1200	36,4	36,7	37,1	(4)	(4)	2,2°	1,15	25	PDR 70	100	±5
AU 1800-7 D	1800	39,9	40,3	40,6	(4)	(4)	1,5°	1,15	27	PDR 70	100	±5
AU 2400-7 D	2400	42,4	42,7	43,1	(4)	(4)	1,1°	1,10	30	PDR 70	100	±5
AU 3000-7 D	3000	44,4	44,7	45,1	(4)	(4)	0,9°	1,10	30	PDR 70	100	±5
High performance dual polarized												
AU 600-7 RD	600	30,8	31,1	31,5	(4)	(4)	4,3°	1,20	24	PDR 70	100	±5
AU 1200-7 RD	1200	36,8	37,1	37,5	(4)	(4)	2,2°	1,15	25	PDR 70	100	±5
AU 1800-7 RD	1800	40,3	40,7	41,0	(4)	(4)	1,5°	1,15	27	PDR 70	100	±5
AU 2400-7 RD	2400	42,8	43,1	43,5	(4)	(4)	1,1°	1,10	30	PDR 70	100	±5
AU 3000-7 RD	3000	44,8	45,1	45,5	(4)	(4)	0,9°	1,10	30	PDR 70	100	±5

Notes

(1) For antennas with dual polarization

(2) Antennas with other connectors available on request

(3) Elevation adjust option ±10 degrees available

(4) Both co-polarisation and cross-polarisation radiation pattern envelopes available on request

(5) Antenna gain values given for standard antennas are a fraction lower compared to the high performance models due to attenuation caused by conical fiber glass radome at this frequency

Aerial Oy
Box 22
04401 Järvenpää, FINLAND

Tel. +358 9 2790 120
Fax +358 9 2910 210

http://www.aerial.fi
aerial@aerial.fi
firstname.surname@aerial.fi

8,2…8,5 GHz

Model	Size Diam. mm	Gain Low dBi	Gain Mid dBi	Gain High dBi	Front-to-back dB	X-pol discr. dB	Beam width ° (-3 dB)	SWR VSWR Max	Inter port Isolation dB (1)	Connector Flange (2)	Mount Diam. mm	Elev. adj. ° (3)
Standard (5)												
AU 600-8,4	600	31,6	31,8	32,0	(4)	(4)	3,9°	1,20	-	PDR 84	100	±5
AU 1200-8,4	1200	37,7	37,9	38,1	(4)	(4)	1,95°	1,15	-	PDR 84	100	±5
AU 1800-8,4	1800	41,2	41,4	41,6	(4)	(4)	1,3°	1,15	-	PDR 84	100	±5
AU 2400-8,4	2400	43,6	43,8	44,0	(4)	(4)	1,0°	1,10	-	PDR 84	100	±5
AU 3000-8,4	3000	45,6	45,8	46,0	(4)	(4)	0,8°	1,10	-	PDR 84	100	±5
High performance												
AU 600-8,4 R	600	31,6	31,8	32,0	(4)	(4)	3,9°	1,20	-	PDR 84	100	±5
AU 1200-8,4 R	1200	37,7	37,9	38,1	(4)	(4)	1,95°	1,15	-	PDR 84	100	±5
AU 1800-8,4 R	1800	41,2	41,4	41,6	(4)	(4)	1,3°	1,15	-	PDR 84	100	±5
AU 2400-8,4 R	2400	43,6	43,8	44,0	(4)	(4)	1,0°	1,10	-	PDR 84	100	±5
AU 3000-8,4 R	3000	45,6	45,8	46,0	(4)	(4)	0,8°	1,10	-	PDR 84	100	±5
Standard dual polarized (5)												
AU 600-8,4 D	600	31,6	31,8	32,0	(4)	(4)	3,9°	1,20	24	PDR 84	100	±5
AU 1200-8,4 D	1200	37,7	37,9	38,1	(4)	(4)	1,95°	1,15	25	PDR 84	100	±5
AU 1800-8,4 D	1800	41,2	41,4	41,6	(4)	(4)	1,3°	1,15	27	PDR 84	100	±5
AU 2400-8,4 D	2400	43,6	43,8	44,0	(4)	(4)	1,0°	1,10	30	PDR 84	100	±5
AU 3000-8,4 D	3000	45,6	45,8	46,0	(4)	(4)	0,8°	1,10	30	PDR 84	100	±5
High performance dual polarized												
AU 600-8,4 RD	600	31,6	31,8	32,0	(4)	(4)	3,9°	1,20	24	PDR 84	100	±5
AU 1200-8,4 RD	1200	37,7	37,9	38,1	(4)	(4)	1,95°	1,15	25	PDR 84	100	±5
AU 1800-8,4 RD	1800	41,2	41,4	41,6	(4)	(4)	1,3°	1,15	27	PDR 84	100	±5
AU 2400-8,4 RD	2400	43,6	43,8	44,0	(4)	(4)	1,0°	1,10	30	PDR 84	100	±5
AU 3000-8,4 RD	3000	45,6	45,8	46,0	(4)	(4)	0,8°	1,10	30	PDR 84	100	±5

Notes

(1) For antennas with dual polarization

(2) Antennas with other connectors available on request

(3) Elevation adjust option ±10 degrees available

(4) Both co-polarisation and cross-polarisation radiation pattern envelopes available on request

(5) Antenna gain values given for standard antennas are a fraction lower compared to the high performance models due to attenuation caused by conical fiber glass radome at this frequency

Aerial Oy
Box 22
04401 Järvenpää, FINLAND

Tel. +358 9 2790 120
Fax +358 9 2910 210

http://www.aerial.fi
aerial@aerial.fi
firstname.surname@aerial.fi

10,2…10,7 GHz

Model	Size Diam. mm	Gain Low dBi	Gain Mid dBi	Gain High dBi	Front-to-back dB	X-pol discr. dB	Beam width ° (-3 dB)	SWR VSWR Max	Inter port Isolation dB (1)	Connector Flange (2)	Mount Diam. mm	Elev. adj. ° (3)
Standard (5)												
AU 600-10	600	33,4	33,6	33,8	(4)	(4)	3,4°	1,20	-	PDR 100	100	±5
AU 1200-10	1200	39,4	39,6	39,8	(4)	(4)	1,7°	1,15	-	PDR 100	100	±5
AU 1800-10	1800	42,9	43,1	43,3	(4)	(4)	1,2°	1,15	-	PDR 100	100	±5
AU 2400-10	2400	45,4	45,6	45,8	(4)	(4)	0,9°	1,10	-	PDR 100	100	±5
AU 3000-10	3000	47,3	47,6	47,8	(4)	(4)	0,7°	1,10	-	PDR 100	100	±5
High performance												
AU 600-10 R	600	33,9	34,1	34,3	(4)	(4)	3,4°	1,20	-	PDR 100	100	±5
AU 1200-10 R	1200	39,9	40,1	40,3	(4)	(4)	1,7°	1,15	-	PDR 100	100	±5
AU 1800-10 R	1800	43,4	43,6	43,8	(4)	(4)	1,2°	1,15	-	PDR 100	100	±5
AU 2400-10 R	2400	45,9	46,1	46,3	(4)	(4)	0,9°	1,10	-	PDR 100	100	±5
AU 3000-10 R	3000	47,8	48,1	48,3	(4)	(4)	0,7°	1,10	-	PDR 100	100	±5
Standard dual polarized (5)												
AU 600-10 D	600	33,4	33,6	33,8	(4)	(4)	3,4°	1,20	24	PDR 100	100	±5
AU 1200-10 D	1200	39,4	39,6	39,8	(4)	(4)	1,7°	1,15	25	PDR 100	100	±5
AU 1800-10 D	1800	42,9	43,1	43,3	(4)	(4)	1,2°	1,15	27	PDR 100	100	±5
AU 2400-10 D	2400	45,4	45,6	45,8	(4)	(4)	0,9°	1,10	30	PDR 100	100	±5
AU 3000-10 D	3000	47,3	47,6	47,8	(4)	(4)	0,7°	1,10	30	PDR 100	100	±5
High performance dual polarized												
AU 600-10 RD	600	33,9	34,1	34,3	(4)	(4)	3,4°	1,20	24	PDR 100	100	±5
AU 1200-10 RD	1200	39,9	40,1	40,3	(4)	(4)	1,7°	1,15	25	PDR 100	100	±5
AU 1800-10 RD	1800	43,4	43,6	43,8	(4)	(4)	1,2°	1,15	27	PDR 100	100	±5
AU 2400-10 RD	2400	45,9	46,1	46,3	(4)	(4)	0,9°	1,10	30	PDR 100	100	±5
AU 3000-10 RD	3000	47,8	48,1	48,3	(4)	(4)	0,7°	1,10	30	PDR 100	100	±5

Notes

(1) For antennas with dual polarization

(2) Antennas with other connectors available on request

(3) Elevation adjust option ±10 degrees available

(4) Both co-polarisation and cross-polarisation radiation pattern envelopes available on request

(5) Antenna gain values given for standard antennas are a fraction lower compared to the high performance models due to attenuation caused by conical fiber glass radome at this frequency

Aerial Oy
Box 22
04401 Järvenpää, FINLAND

Tel. +358 9 2790 120
Fax +358 9 2910 210

http://www.aerial.fi
aerial@aerial.fi
firstname.surname@aerial.fi

12,75…13,25 GHz

Model	Size Diam. mm	Gain Low dBi	Gain Mid dBi	Gain High dBi	Front-to-back dB	X-pol discr. dB	Beam width ° (-3 dB)	SWR VSWR Max	Inter port Isolation dB (1)	Connector Flange (2)	Mount Diam. mm	Elev. adj. ° (3)
Standard (5)												
AU 600-13	600	35,2	35,4	35,5	(4)	(4)	2,6°	1,20	-	PDR 120	100	±5
AU 1200-13	1200	41,2	41,4	41,6	(4)	(4)	1,2°	1,15	-	PDR 120	100	±5
AU 1800-13	1800	44,7	44,9	45,1	(4)	(4)	0,9°	1,15	-	PDR 120	100	±5
AU 2400-13	2400	46,7	46,9	47,1	(4)	(4)	0,7	1,15	-	PDR 120	100	±5
High performance												
AU 600-13 R	600	35,8	36,0	36,1	(4)	(4)	2,6°	1,20	-	PDR 120	100	±5
AU 1200-13 R	1200	41,8	42,0	42,2	(4)	(4)	1,2°	1,15	-	PDR 120	100	±5
AU 1800-13 R	1800	45,3	45,5	45,7	(4)	(4)	0,9°	1,15	-	PDR 120	100	±5
AU 2400-13 R	2400	46,7	46,9	47,1	(4)	(4)	0,7	1,15	-	PDR 120	100	±5
Standard dual polarized (5)												
AU 600-13 D	600	35,2	35,4	35,5	(4)	(4)	2,6°	1,20	24	PDR 120	100	±5
AU 1200-13 D	1200	41,2	41,4	41,6	(4)	(4)	1,2°	1,15	25	PDR 120	100	±5
AU 1800-13 D	1800	44,7	44,9	45,1	(4)	(4)	0,9°	1,15	27	PDR 120	100	±5
AU 2400-13 D	2400	46,7	46,9	47,1	(4)	(4)	0,7	1,15	30	PDR 120	100	±5
High performance dual polarized												
AU 600-13 RD	600	35,8	36,0	36,1	(4)	(4)	2,6°	1,20	24	PDR 120	100	±5
AU 1200-13 RD	1200	41,8	42,0	42,2	(4)	(4)	1,2°	1,15	25	PDR 120	100	±5
AU 1800-13 RD	1800	45,3	45,5	45,7	(4)	(4)	0,9°	1,15	27	PDR 120	100	±5
AU 2400-13 RD	2400	46,7	46,9	47,1	(4)	(4)	0,7	1,15	30	PDR 120	100	±5

Notes

(1) For antennas with dual polarization

(2) Antennas with other connectors available on request

(3) Elevation adjust option ±10 degrees available

(4) Both co-polarisation and cross-polarisation radiation pattern envelopes available on request

(5) Antenna gain values given for standard antennas are a fraction lower compared to the high performance models due to attenuation caused by conical fiber glass radome at this frequency

Aerial Oy
Box 22
04401 Järvenpää, FINLAND

Tel. +358 9 2790 120
Fax +358 9 2910 210

http://www.aerial.fi
aerial@aerial.fi
firstname.surname@aerial.fi

14,5…15,35 GHz

Model	Size Diam. mm	Gain Low dBi	Gain Mid dBi	Gain High dBi	Front-to-back dB	X-pol discr. dB	Beam width ° (-3 dB)	SWR VSWR Max	Inter port Isolation dB (1)	Connector Flange (2)	Mount Diam. mm	Elev. adj. ° (3)
Standard (5)												
AU 600-15	600	36,2	36,5	36,7	(4)	(4)	2,2°	1,20	-	PBR 140	100	±5
AU 1200-15	1200	41,3	42,5	42,7	(4)	(4)	1,2°	1,15	-	PBR 140	100	±5
AU 1800-15	1800	45,8	46,0	46,3	(4)	(4)	0,8°	1,15	-	PBR 140	100	±5
High performance												
AU 600-15 R	600	36,9	37,2	37,4	(4)	(4)	2,2°	1,20	-	PBR 140	100	±5
AU 1200-15 R	1200	42,0	43,2	43,4	(4)	(4)	1,2°	1,15	-	PBR 140	100	±5
AU 1800-15 R	1800	46,5	46,7	47,0	(4)	(4)	0,8°	1,15	-	PBR 140	100	±5
Standard dual polarized (5)												
AU 600-15 D	600	36,2	36,5	36,7	(4)	(4)	2,2°	1,20	24	PBR 140	100	±5
AU 1200-15 D	1200	41,3	42,5	42,7	(4)	(4)	1,2°	1,15	25	PBR 140	100	±5
AU 1800-15 D	1800	45,8	46,0	46,3	(4)	(4)	0,8°	1,15	27	PBR 140	100	±5
High performance dual polarized												
AU 600-15 RD	600	36,9	37,2	37,4	(4)	(4)	2,2°	1,20	24	PBR 140	100	±5
AU 1200-15 RD	1200	42,0	43,2	43,4	(4)	(4)	1,2°	1,15	25	PBR 140	100	±5
AU 1800-15 RD	1800	46,5	46,7	47,0	(4)	(4)	0,8°	1,15	27	PBR 140	100	±5

Notes

(1) For antennas with dual polarization

(2) Antennas with other connectors available on request

(3) Elevation adjust option ±10 degrees available

(4) Both co-polarisation and cross-polarisation radiation pattern envelopes available on request

(5) Antenna gain values given for standard antennas are a fraction lower compared to the high performance models due to attenuation caused by conical fiber glass radome at this frequency

Aerial Oy
Box 22
04401 Järvenpää, FINLAND

Tel. +358 9 2790 120
Fax +358 9 2910 210

http://www.aerial.fi
aerial@aerial.fi
firstname.surname@aerial.fi

17,7…19,7 GHz

Model	Size Diam. mm	Gain Low dBi	Gain Mid dBi	Gain High dBi	Front-to-back dB	X-pol discr. dB	Beam width ° (-3 dB)	SWR VSWR Max	Inter port Isolation dB (1)	Connector Flange (2)	Mount Diam. mm	Elev. adj. ° (3)
Standard (5)												
AU 300-18	300	31,6	32,1	32,6	(4)	(4)	3,6°	1,2	-	PBR 220	100	±5
AU 600-18	600	37,7	38,1	38,6	(4)	(4)	1,8°	1,2	-	PBR 220	100	±5
AU 1200-18	1200	43,7	44,2	44,6	(4)	(4)	0,9°	1,2	-	PBR 220	100	±5
AU 1800-18	1800	47,2	47,7	48,1	(4)	(4)	0,7°	1,2	-	PBR 220	100	±5
High performance												
AU 300-18 R	300	32,6	33,1	33,6	(4)	(4)	3,6°	1,2	-	PBR 220	100	±5
AU 600-18 R	600	38,7	39,1	39,6	(4)	(4)	1,8°	1,2	-	PBR 220	100	±5
AU 1200-18 R	1200	44,7	45,2	45,6	(4)	(4)	0,9°	1,2	-	PBR 220	100	±5
AU 1800-18 R	1800	48,2	48,7	49,1	(4)	(4)	0,7°	1,2	-	PBR 220	100	±5
Standard dual polarized (5)												
AU 300-18 D	300	31,6	32,1	32,6	(4)	(4)	3,6°	1,2	23	PBR 220	100	±5
AU 600-18 D	600	37,7	38,1	38,6	(4)	(4)	1,8°	1,2	24	PBR 220	100	±5
AU 1200-18 D	1200	43,7	44,2	44,6	(4)	(4)	0,9°	1,2	25	PBR 220	100	±5
AU 1800-18 D	1800	47,2	47,7	48,1	(4)	(4)	0,7°	1,2	27	PBR 220	100	±5
High performance dual polarized												
AU 300-18 RD	300	32,6	33,1	33,6	(4)	(4)	3,6°	1,2	23	PBR 220	100	±5
AU 600-18 RD	600	38,7	39,1	39,6	(4)	(4)	1,8°	1,2	24	PBR 220	100	±5
AU 1200-18 RD	1200	44,7	45,2	45,6	(4)	(4)	0,9°	1,2	25	PBR 220	100	±5
AU 1800-18 RD	1800	48,2	48,7	49,1	(4)	(4)	0,7°	1,2	27	PBR 220	100	±5

Notes

(1) For antennas with dual polarization

(2) Antennas with other connectors available on request

(3) Elevation adjust option ±10 degrees available

(4) Both co-polarisation and cross-polarisation radiation pattern envelopes available on request

(5) Antenna gain values given for standard antennas are a fraction lower compared to the high performance models due to attenuation caused by conical fiber glass radome at this frequency

Aerial Oy
Box 22
04401 Järvenpää, FINLAND

Tel. +358 9 2790 120
Fax +358 9 2910 210

http://www.aerial.fi
aerial@aerial.fi
firstname.surname@aerial.fi

21,2…23,6 GHz

Model	Size Diam. mm	Gain Low dBi	Gain Mid dBi	Gain High dBi	Front-to-back dB	X-pol discr. dB	Beam width ° (-3 dB)	SWR VSWR Max	Inter port Isolation dB (1)	Connector Flange (2)	Mount Diam. mm	Elev. adj. ° (3)
Standard												
AU 300-23	300	34,2	34,7	35,1	(4)	(4)	2,8°	1,2	-	PBR 220	100	±5
AU 600-23	600	40,2	40,7	41,1	(4)	(4)	1,6°	1,2	-	PBR 220	100	±5
AU 1200-23	1200	46,2	46,7	47,1	(4)	(4)	0,8°	1,2	-	PBR 220	100	±5
AU 1800-23	1800	49,7	50,2	50,6	(4)	(4)	0,5°	1,2	-	PBR 220	100	±5
High performance												
AU 300-23 R	300	34,2	34,7	35,1	(4)	(4)	2,8°	1,2	-	PBR 220	100	±5
AU 600-23 R	600	40,2	40,7	41,1	(4)	(4)	1,6°	1,2	-	PBR 220	100	±5
AU 1200-23 R	1200	46,2	46,7	47,1	(4)	(4)	0,8°	1,2	-	PBR 220	100	±5
AU 1800-23 R	1800	49,7	50,2	50,6	(4)	(4)	0,5°	1,2	-	PBR 220	100	±5
Standard dual polarized												
AU 300-23 D	300	34,2	34,7	35,1	(4)	(4)	2,8°	1,25	23	PBR 220	100	±5
AU 600-23 D	600	40,2	40,7	41,1	(4)	(4)	1,6°	1,25	24	PBR 220	100	±5
AU 1200-23 D	1200	46,2	46,7	47,1	(4)	(4)	0,8°	1,25	25	PBR 220	100	±5
AU 1800-23 D	1800	49,7	50,2	50,6	(4)	(4)	0,5°	1,25	27	PBR 220	100	±5
High performance dual polarized												
AU 300-23 RD	300	34,2	34,7	35,1	(4)	(4)	2,8°	1,25	23	PBR 220	100	±5
AU 600-23 RD	600	40,2	40,7	41,1	(4)	(4)	1,6°	1,25	24	PBR 220	100	±5
AU 1200-23 RD	1200	46,2	46,7	47,1	(4)	(4)	0,8°	1,25	25	PBR 220	100	±5
AU 1800-23 RD	1800	49,7	50,2	50,6	(4)	(4)	0,5°	1,25	27	PBR 220	100	±5

Notes

(1) For antennas with dual polarization
(2) Antennas with other connectors available on request
(3) Elevation adjust option ±10 degrees available
(4) Both co-polarisation and cross-polarisation radiation pattern envelopes available on request

Aerial Oy
Box 22
04401 Järvenpää, FINLAND

Tel. +358 9 2790 120
Fax +358 9 2910 210

http://www.aerial.fi
aerial@aerial.fi
firstname.surname@aerial.fi

37…40 GHz

Model	Size Diam. mm	Gain Low dBi	Gain Mid dBi	Gain High dBi	Front-to-back dB	X-pol discr. dB	Beam width ° (-3 dB)	SWR VSWR Max	Inter port Isolation dB (1)	Connector Flange (2)	Mount Diam. mm	Elev. adj. ° (3)
High performance												
AU 300-38 R	300	39	39,4	39,7	(4)	(4)	1,7°	1,2	-	PBR 320	100	±5
AU 600-38 R	600	45,1	45,4	45,7	(4)	(4)	1,0°	1,2	-	PBR 320	100	±5
High performance dual polarized												
AU 300-38 RD	300	39	39,4	39,7	(4)	(4)	1,7°	1,25	25	PBR 320	100	±5
AU 600-38 RD	600	45,1	45,4	45,7	(4)	(4)	1,0°	1,25	25	PBR 320	100	±5

Notes

(1) For antennas with dual polarization

(2) Antennas with other connectors available on request

(3) Elevation adjust option ±10 degrees available

(4) Both co-polarisation and cross-polarisation radiation pattern envelopes available on request

Aerial Oy
Box 22
04401 Järvenpää, FINLAND

Tel. +358 9 2790 120
Fax +358 9 2910 210

http://www.aerial.fi
aerial@aerial.fi
firstname.surname@aerial.fi

Grid antennas

Model	Size Diam. mm	Gain Low dBi	Gain Mid dBi	Gain High dBi	Front-to-back dB	X-pol discr. dB	Beam width ° (-3 dB)	SWR VSWR dBi	Inter port Isolation dB (1)	Connector Flange (2)	Mount Diam. mm	Elev. adj. °
Grid antennas 0,403…0,470 GHz												
AU 1800-440G	1800	15,0	15,7	16,4	22	30	22,9	1,35	-	7/8" EIA	100	±5
AU 2400-440G	2400	17,3	18,0	18,7	22	30	17,1	1,3	-	7/8" EIA	100	±5
AU 3000-440G	3000	19,4	20,1	20,8	22	30	13,7	1,3	-	7/8" EIA	100	±5
AU 4000-440G	4000	21,9	22,6	23,3	24	30	10,3	1,3	-	7/8" EIA	100	±5
Grid antennas 0,89…0,96 GHz												
AU 1800-0,9G	1800	21,9	22,2	22,5	25	30	10,8	1,3	-	7/8" EIA	100	±5
AU 2400-0,9G	2400	24,4	24,7	25,0	28	30	8,1	1,3	-	7/8" EIA	100	±5
AU 3000-0,9G	3000	26,3	26,6	26,9	30	30	6,5	1,3	-	7/8" EIA	100	±5
AU 4000-0,9G	4000	28,8	29,1	29,4	43	30	4,9	1,3	-	7/8" EIA	100	±5
Grid antennas 1,35…1,54 GHz												
AU 1200-1,5G	1200	22,0	22,5	23,0	28	30	10,4	1,3	-	7/8" EIA	100	±5
AU 1800-1,5G	1800	25,6	26,1	26,6	31	30	6,9	1,25	-	7/8" EIA	100	±5
AU 2400-1,5G	2400	28,1	28,6	29,1	34	30	5,2	1,2	-	7/8" EIA	100	±5
AU 3000-1,5G	3000	30,0	30,5	31,0	37	30	4,2	1,2	-	7/8" EIA	100	±5
AU 4000-1,5G	4000	32,5	33,0	33,5	40	30	3,1	1,2	-	7/8" EIA	100	±5
Grid antennas 1,7…2,3 (1) GHz												
AU 1200-2G	1200	24,0	25,4	26,8	30	30	7,5	1,35	-	7/8" EIA	100	±5
AU 1800-2G	1800	27,5	28,9	30,3	35	35	5,0	1,2	-	7/8" EIA	100	±5
AU 2400-2G	2400	30,0	31,4	32,8	38	35	3,8	1,2	-	7/8" EIA	100	±5
AU 3000-2G	3000	31,9	33,3	34,7	40	35	3,0	1,2	-	7/8" EIA	100	±5
AU 4000-2G	4000	34,4	35,8	37,2	42	35	2,3	1,2	-	7/8" EIA	100	±5
Grid antennas 2,3…2,5 GHz												
AU 1200-2,4G	1200	26,6	27,0	27,4	30	30	6,3	1,3	-	7/8" EIA	100	±5
AU 1800-2,4G	1800	30,1	30,5	30,9	33	30	4,2	1,2	-	7/8" EIA	100	±5
AU 2400-2,4G	2400	32,6	33,0	33,4	36	30	3,1	1,2	-	7/8" EIA	100	±5
AU 3000-2,4G	3000	34,5	34,9	35,3	38	30	2,5	1,2	-	7/8" EIA	100	±5
AU 4000-2,4G	4000	37,0	37,4	37,8	40	30	1,9	1,2	-	7/8" EIA	100	±5
Grid antennas 2,48…2,7 GHz												
AU 1200-2,4G	1200	27,3	27,6	27,9	30	30	5,8	1,3	-	7/8" EIA	100	±5
AU 1800-2,6G	1800	30,9	31,2	31,5	33	30	3,9	1,3	-	7/8" EIA	100	±5
AU 2400-2,6G	2400	33,4	33,7	34,0	36	30	2,9	1,2	-	7/8" EIA	100	±5
AU 3000-2,6G	3000	35,3	35,6	35,9	38	30	2,3	1,2	-	7/8" EIA	100	±5
AU 4000-2,6G	4000	37,8	38,1	38,4	40	30	1,8	1,2	-	7/8" EIA	100	±5

Notes

(1) Any 400 MHz band between these frequencies.

(2) Versions with 7/16- or N-connector available on request.

Aerial Oy
Box 22
04401 Järvenpää, FINLAND

Tel. +358 9 2790 120
Fax +358 9 2910 210

http://www.aerial.fi
aerial@aerial.fi
firstname.surname@aerial.fi

Antenna main dimensions

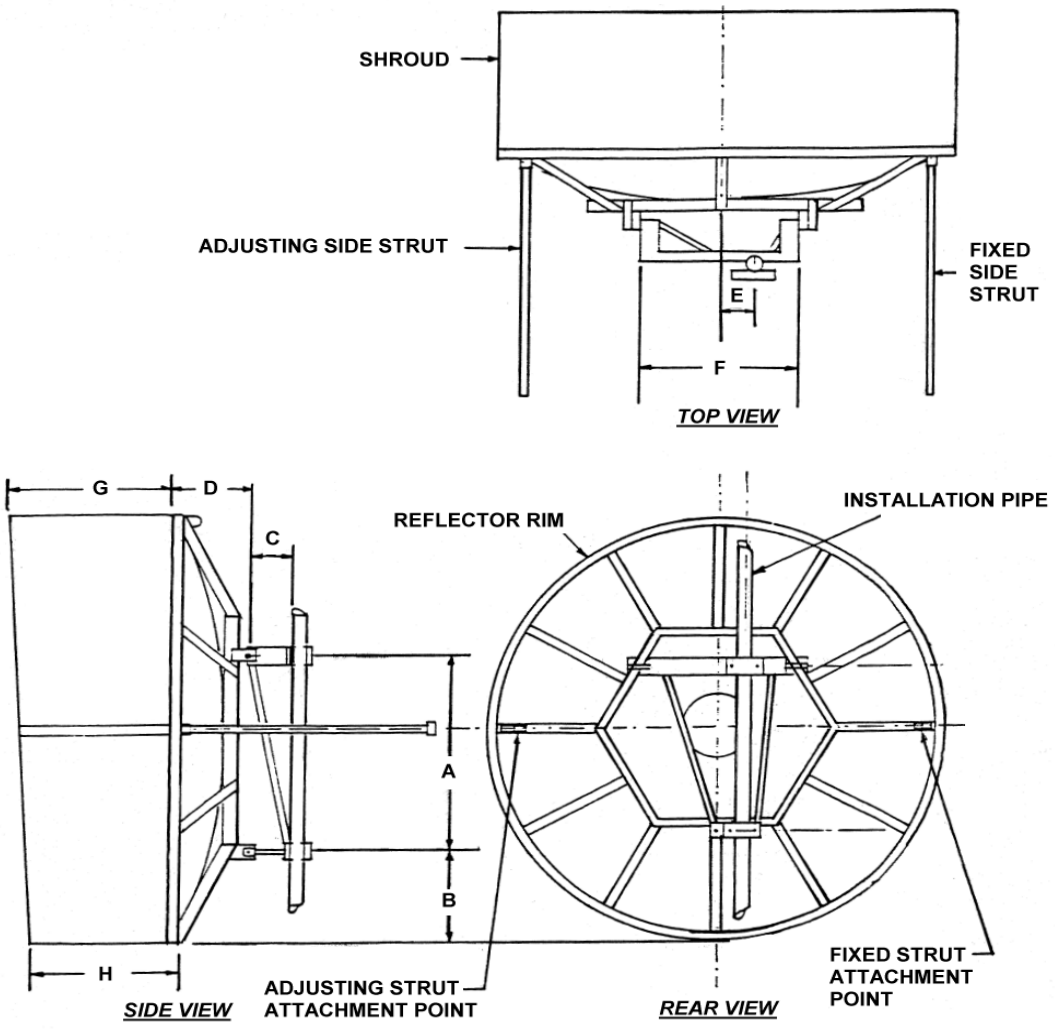

Size Diam.	A	B	C	D	E	F	G	H
mm	mm	mm	mm	mm	mm	mm	mm	mm
600	190	0	230	0	100	730	300	280
1200	919	0	215	80	250	1092	460	420
1800	764	375	200	360	135	938	585	545
2400	1127	496	200	440	180	890	1190	1085
3000	1127	756	200	570	180	890	1190	1075

Aerial Oy
Box 22
04401 Järvenpää, FINLAND

Tel. +358 9 2790 120
Fax +358 9 2910 210

http://www.aerial.fi
aerial@aerial.fi
firstname.surname@aerial.fi

Wind forces and loads produced by microwave antennas

The following graph and table describes the axial and side forces and twisting moment exerted on a supporting structure by microwave antenna. Antenna charasteristics conform to TIA/EIA 222 E specifications. The wind pressure 1987 N/m² used in the calculations equals to 200 km/h wind speed at 0°C ambient temperature and 1,29 kg/m³ air density.

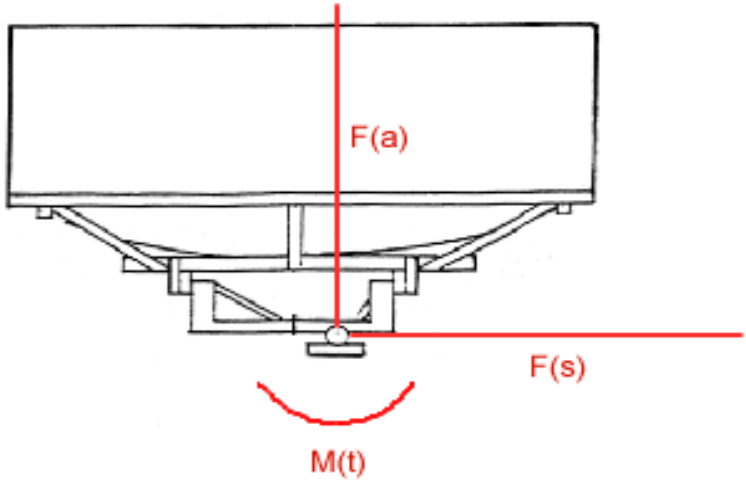

Antenna type	Size	F(a) max	F(s) max	M(t) max	F(a) max	F(s) max	M(t) max
		With no ice			With 13 mm (1/2") radial ice		
	m	kN	kN	kNm	kN	kN	kNm
Standard antennas	1,2	2,02	1,02	0,5	2,11	1,06	0,5
Standard antennas	1,8	4,54	2,3	1,7	4,67	2,36	1,8
Standard antennas	2,4	8,08	4,08	3,8	8,25	4,17	3,9
Standard antennas	3	12,62	6,38	7,2	12,84	6,48	7,3
High performance antennas	1,2	2,72	1,3	0,5	2,83	1,35	0,5
High performance antennas	1,8	6,12	2,92	1,4	6,29	3,01	1,4
High performance antennas	2,4	10,87	5,19	2,9	11,11	5,31	3
High performance antennas	3	16,99	8,12	5,4	17,28	8,25	5,4
Grid antennas	1,2	1,11	0,57	0,2	1,16	0,59	0,2
Grid antennas	1,8	2,5	1,27	0,6	2,57	1,31	0,7
Grid antennas	2,4	4,44	2,26	1,3	4,53	2,31	1,4
Grid antennas	3	6,94	3,54	2,4	7,06	3,6	2,5

Aerial Oy
Box 22
04401 Järvenpää, FINLAND

Tel. +358 9 2790 120
Fax +358 9 2910 210

http://www.aerial.fi
aerial@aerial.fi
firstname.surname@aerial.fi

Radio relay antenna package information, sizes and weights

By default, Aerial Oy radio relay antennas are shipped in palette based wooden crates.
Package details are listed below. Please contact sales on any special requirements.

Model	Size Diam. mm	Gross kg	Net kg	Length m	Width m	Heigth m	Volume m³
Standard and standard dual polarised antennas							
AU600-…	600	40	20	0,8	0,7	1	0,56
AU1200-…	1200	110	75	1,53	1,1	1,54	2,59
AU1800-…	1800	170	110	2,05	1,25	2,25	5,77
AU2400-…	2400	440	180	3,23	2,32	2,49	18,66
AU3000-…	3000	520	255	3,3	2,4	3,3	26,14
High performance and high performance dual polarised antennas							
AU600-…	600	36	18	0,8	0,9	1	0,72
AU1200-…	1200	87	52	1,53	1,1	1,54	2,59
AU1800-…	1800	195	99	2,05	1,63	1,67	5,58
AU2400-…	2400	407	147	3,23	2,8	2,49	22,52
AU3000-…	3000	467	201	3,3	2,9	3,3	31,58

Aerial Oy
Box 22
04401 Järvenpää, FINLAND

Tel. +358 9 2790 120
Fax +358 9 2910 210

http://www.aerial.fi
aerial@aerial.fi
firstname.surname@aerial.fi

APPENDIX E: TECHNICAL SPECIFICATION OF AERIAL OY PVC SHEET RADOME

Type	AERIAL OY PVC SHEET RADOME
Material	Scanplan 5545 Base fabric: 1100 dtex polyester
Coating	PVC, extra UV, mildew and rot resistant.
Weight	0,55 kg/m^2
Thickness	0,45 mm nominal
Tear strength	350/300N according to DIN53363 500/500N according to DIN53356
Tensile strength	2700/2500N/50mm accorging to SFS 2983, EN ISO 1421 and DIN 53354
Adhesion	100N/50mm
Temperature range	-30…+70°C according to SFS-EN 1876-1
Attenuation of dry radome	7 GHz A<0,1dB 12 GHz A=0,2 dB 18 GHz A=0,45 dB 24 GHz A=0,55 dB
Standard sizes available for Aerial Oy Antennas	300 mm (AU300-XXR/XXRD) 600 mm (AU600-XXR/XXRD) 850 mm (AU850-XXR/XXRD) 1200 mm (AU1200-XXR/XXRD) 1800 mm (AU1800-XXR/XXRD) 2400 mm (AU2400-XXR/XXRD) 3000 mm (AU3000-XXR/XXRD)
Options	Special sizes and models available

Technical data shown above are average values of production. The sheet radome mounting is typically designed so that the radomes vibrate when in use and that way avoid accumulation of snow and ice. All the radome types mentioned above have an exprimental average lifetime of 25 years.

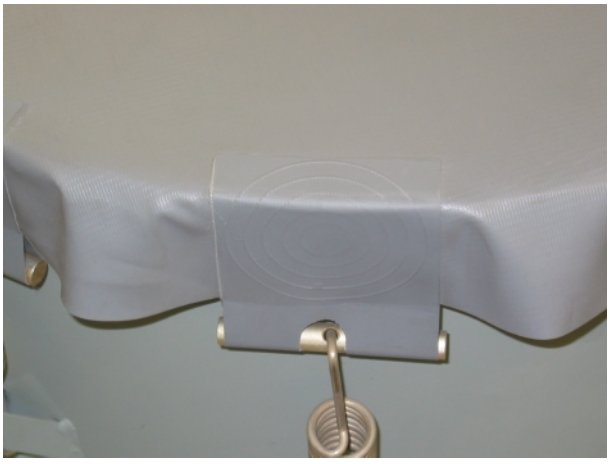

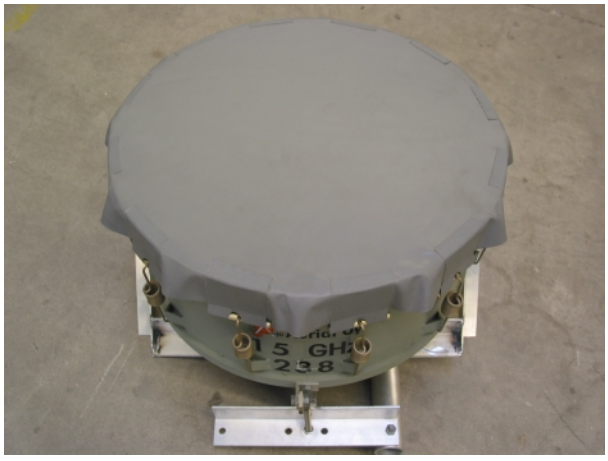

Aerial Oy
Box 22
04401 Järvenpää
Finland
Tel. +358 9 2790 120
Fax +358 9 2910 210
Y-tunnus: 0126391-0
http://www.aerial.fi
aerial@aerial.fi
VAT: FI01263910

LOG-PERIODIC DIPOLE ARRAY LPD100-170

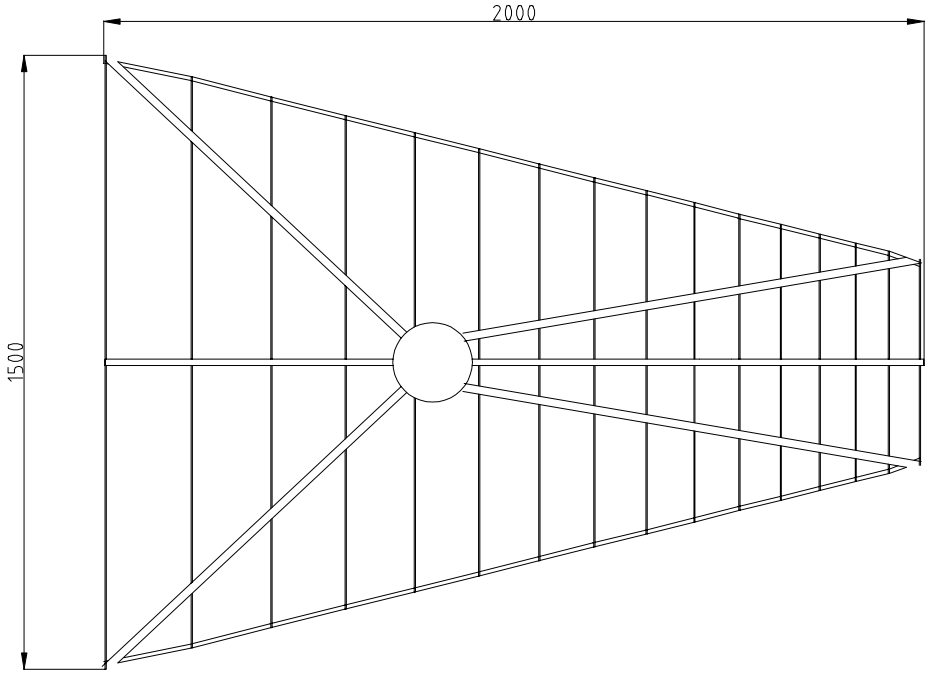

Type	LPD100-170
Frequency	100...170 MHz
Bandwidth	70 MHz
Impedance	50 Ω DC grounded
VSWR	2,0 max
Polarisation	Vertical
Gain	8 dBi
E-plane 3 dB beamwidth	70°
H-plane 3 dB beamwidth	100°
Electrical downtilt	None
Front to back ratio	20 dB
Max. Continuous power	0,5 kW
RF-connector	N or 7/16 female
Operational windspeed	40 m/s (default)
Survival windspeed	55 m/s (default)
Wind area	0,15 m²
Dimensions (HxWxD)	1500x2000x150 mm
Weight	3 kg
Mounting diameter	∅ 30...115 mm pipe
Materials	Aluminium Glassfiber Glass reinforced PE
Options	-

Aerial Oy
Box 22
04401 Järvenpää
Finland
Tel. +358 9 2790 120
Fax +358 9 2910 210
http://www.aerial.fi
aerial@aerial.fi

LPD ANTENNA LPD115-1000

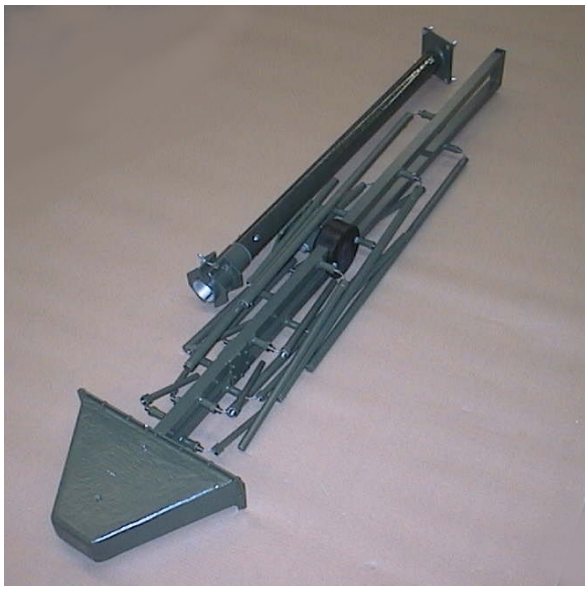

Picture 1. LPD115-1000 disassembled.

Picture 2. LPD115-1000 in-use.

The antenna in both pictures is the normal version of LPD115-1000.

Type	**LPD115-1000**
Frequency	115…1000 MHz
Bandwidth	885 MHz
Impedance	50 Ω DC grounded
VSWR	2,0 max
Polarisation	Horisontal/Vertical
Gain	6 dbi
E-plane 3 dB beamwidth	65°
H-plane 3 dB beamwidth	110°
Electrical downtilt	None
Front to back ratio	15 dB typical
Max. Continuous power	0,5 kW
RF-connector	N or 7/16 female
Operational windspeed	40 m/s (default)
Survival windspeed	55 m/s (default)
Wind area	0,15 m²
Dimensions (H x W x D)	1600x1630x125 mm
Weight	8,4 kg (antenna) 1,8 kg (tube)
Mounting diameter	∅ 60 mm pipe
Materials	Aluminium Glassfiber radome Glass reinforced PE
Options	Normal version: With aluminium radiators, N-connector on a 1000 mm jumper and 1 kW power rating. High power version: With aluminium radiators, 7/16-panel connector, fixed feed line and 2 kW power rating. Carbon fiber version: All exposed radiators carbon fibre, 7/16-panel connector, fixed feed line and 2 kW power rating. Transport case and/or bag can be ordered separately.

Aerial Oy
Box 22
04401 Järvenpää
Finland
Tel. +358 9 2790 120
Fax +358 9 2910 210
http://www.aerial.fi
aerial@aerial.fi

LPD-ANTENNA LPD380-2200

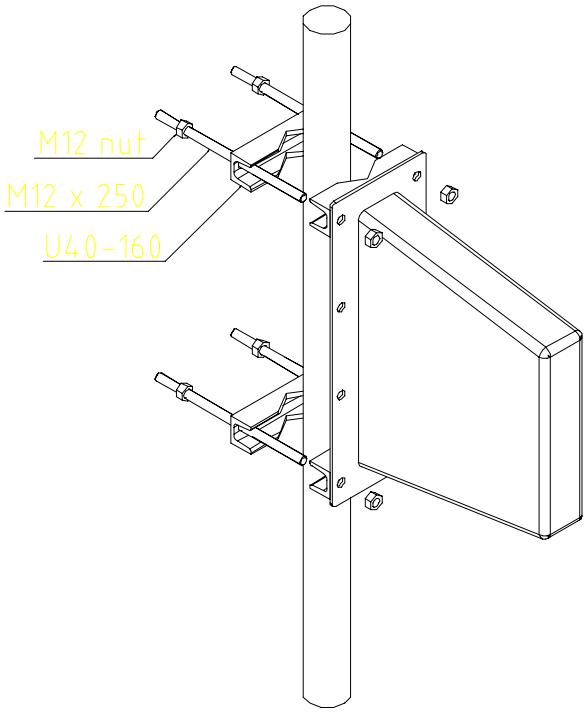

LPD380-2200 mounted vertically on a 60 mm tube.

Type	LPD380-2200
Frequency	380…2200 MHz
Bandwidth	1820 MHz
Impedance	50 Ω DC grounded
VSWR	2,5 typical
Polarisation	Horisontal or Vertical
Gain	4,5 dbi
E-plane 3 dB beamwidth	75°
H-plane 3 dB beamwidth	110°
Electrical downtilt	None
Front to back ratio	15 dB typical
Max. Continuous power	200 W
RF-connector	N
Operational windspeed	40 m/s (default)
Survival windspeed	55 m/s (default)
Wind area	0,1 m²
Dimensions (H x W x D)	500x160x525 mm
Weight	5,0 kg (antenna)
Mounting diameter	∅ 30…115 mm pipe
Materials	Aluminium and tin plated brass Glassfiber radome Glass reinforced PE
Options	-

Aerial Oy
Box 22
04401 Järvenpää
Finland
Tel. +358 9 2790 120
Fax +358 9 2910 210
http://www.aerial.fi
aerial@aerial.fi

LOG-PERIODIC DIPOLE ARRAY LPD20-500

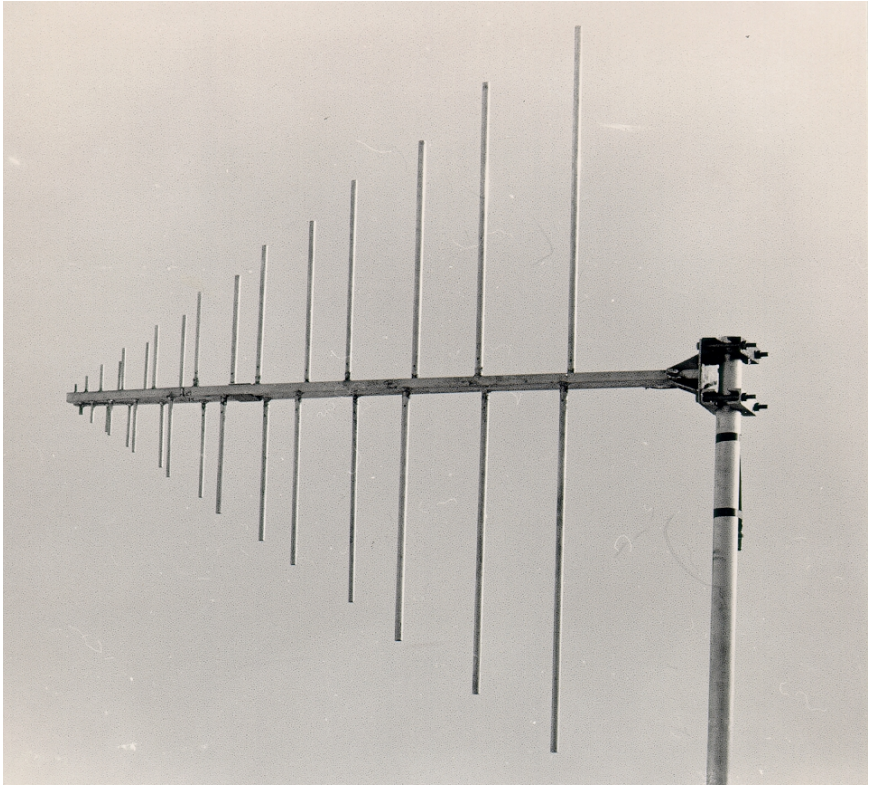

Type	LPD20-500
Frequency	20…500 MHz
Bandwidth	480 MHz
Impedance	50 Ω DC grounded
VSWR	2,0 typical
Polarisation	Horisontal or vertical
Gain	4,5 dBi
E-plane 3 dB beamwidth	70°…40° dependent on frequency
H-plane 3 dB beamwidth	120°…80° dependent on frequency
Electrical downtilt	None
Front to back ratio	10 dB…25 dB dependent on frequency
Max. Continuous power	0,5 kW
RF-connector	N or 7/16 female
Operational windspeed	40 m/s (default)
Survival windspeed	55 m/s (default)
Wind area	0,25 m²
Dimensions (HxWxD)	7300 x 4600 x 160 mm
Weight	20 kg
Mounting diameter	∅ 30…115 mm pipe
Materials	Aluminium Glass reinforced PE

Aerial Oy
Box 22
04401 Järvenpää
Finland
Tel. +358 9 2790 120
Fax +358 9 2910 210
http://www.aerial.fi
aerial@aerial.fi

LOG-PERIODIC DIPOLE ARRAY LPD200-1000

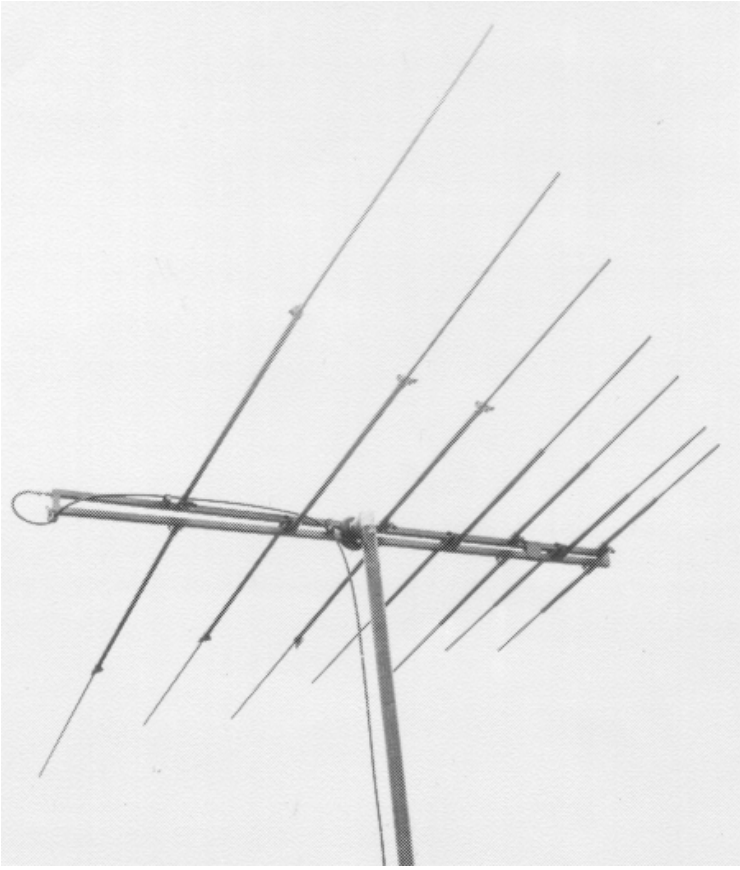

Type	LPD200-1000
Frequency	200...1000 MHz
Bandwidth	800 MHz
Impedance	50 Ω DC grounded
VSWR	2,0 max
Polarisation	Horisontal or Vertical
Gain	7 dBi
E-plane 3 dB beamwidth	65°...60˚ dB dependent on frequency
H-plane 3 dB beamwidth	115°...75˚ dB dependent on frequency
Electrical downtilt	None
Front to back ratio	15 dB...25 dB dependent on frequency
Max. Continuous power	0,5 kW
RF-connector	N or 7/16 female
Operational windspeed	40 m/s (default)
Survival windspeed	55 m/s (default)
Wind area	0,2 m²
Dimensions (HxWxD)	200x800x1000 mm
Weight	3 kg
Mounting diameter	∅ 30...115 mm pipe
Materials	Aluminium Glass reinforced PE
Options	Carbon fiber elements

Aerial Oy
Box 22
04401 Järvenpää
Finland
Tel. +358 9 2790 120
Fax +358 9 2910 210
http://www.aerial.fi
aerial@aerial.fi

LPD30-1000

Type	LPD30-1000
Frequency	30…1000 MHz
Bandwidth	970 MHz
Impedance	50 Ω DC grounded
VSWR	2,0 typical
Polarisation	Horisontal / Vertical
Gain	4 dbi typical
E-plane 3 dB beamwidth	65°
H-plane 3 dB beamwidth	110°
Electrical downtilt	None
Front to back ratio	15 dB typical
Max. Continuous power	1 kW
RF-connector	N female
Operational windspeed	40 m/s (default)
Survival windspeed	55 m/s (default)
Wind area	0,45 m²
Dimensions (H x W x D)	2600 x 5000 x 200 mm
Weight	14 kg (antenna)
Mounting diameter	∅ 60 mm pipe
Materials	Normal version: With aluminium radiators, N-connector on a 1000 mm jumper and 1 kW power rating. High power version: With aluminium radiators, 7/16-panel connector, fixed feed line and 2 kW power rating. Carbon fiber version: All exposed radiators carbon fibre, 7/16-panel connector, fixed feed line and 2 kW power rating. Transport case and/or bag can be ordered separately.

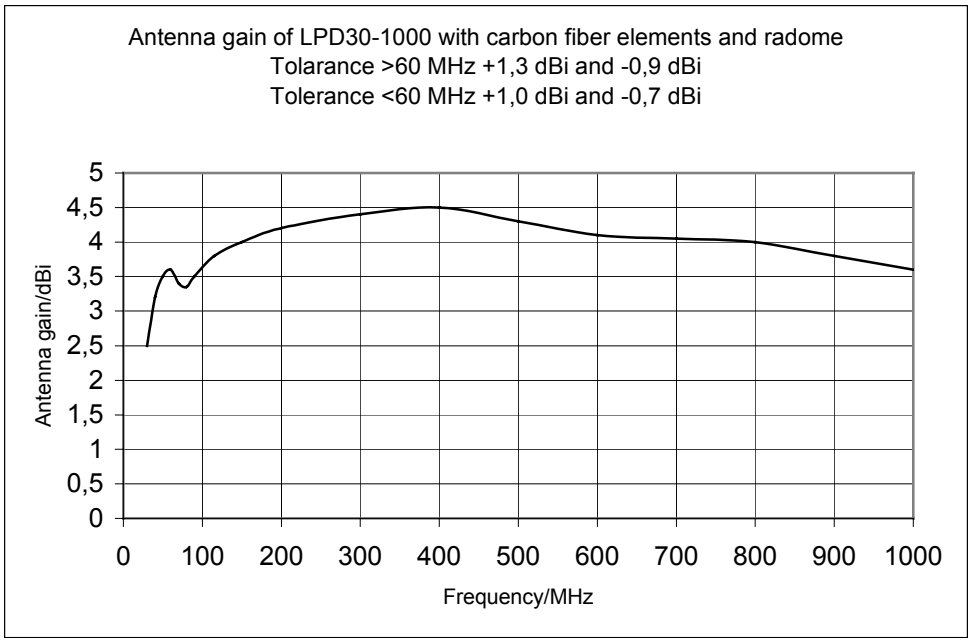

Aerial Oy
Box 22
04401 Järvenpää
Finland
Tel. +358 9 2790 120
Fax +358 9 2910 210
http://www.aerial.fi
aerial@aerial.fi

LOG PERIODIC DIPOLE ARRAY LPD30-300

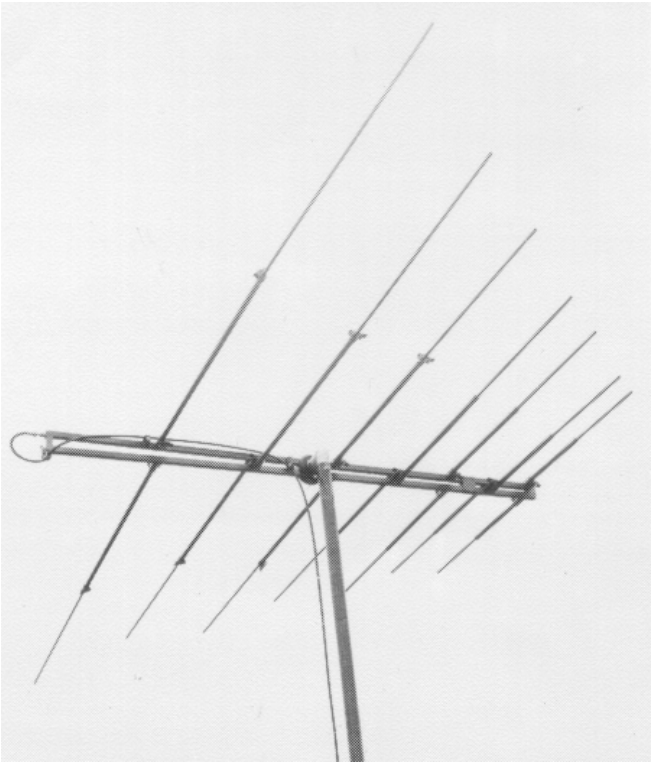

Type	LPD30-300
Frequency	30...300 MHz
Bandwidth	270 MHz
Impedance	50 Ω DC grounded
VSWR	2,0 max
Polarisation	Horisontal or vertical
Gain	5 dBi
E-plane 3 dB beamwidth	Dependent on frequency
H-plane 3 dB beamwidth	Dependent on frequency
Electrical downtilt	None
Front to back ratio	Dependent on frequency
Max. Continuous power	0,5 kW
RF-connector	N or 7/16 female
Operational windspeed	40 m/s (default)
Survival windspeed	55 m/s (default)
Wind area	0,4 m²
Dimensions (HxWxD)	2500x5300x200 mm
Weight	10 kg
Mounting diameter	∅ 30...115 mm pipe
Materials	Aluminium Glass reinforced PE
Options	Carbon fiber elements

Aerial Oy
Box 22
04401 Järvenpää
Finland
Tel. +358 9 2790 120
Fax +358 9 2910 210
http://www.aerial.fi
aerial@aerial.fi

LPD-ANTENNA LPD380-960

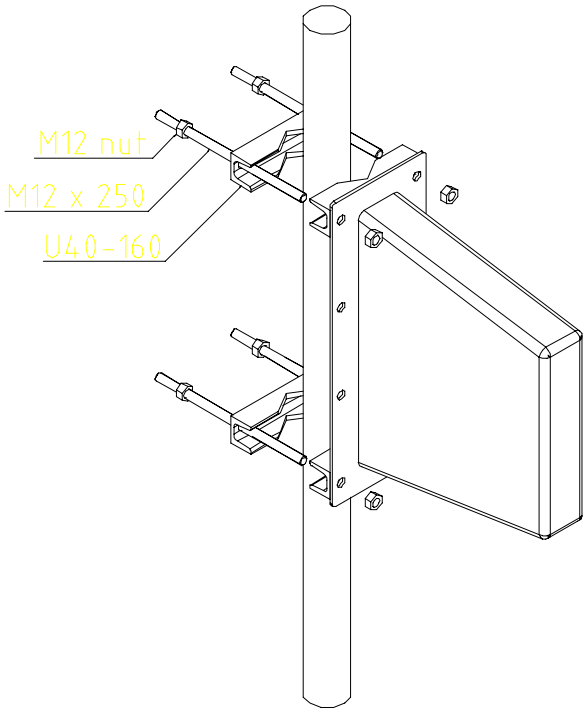

LPD380-960 mounted vertically on a 60 mm tube.

Type	LPD380-960
Frequency	380…960 MHz
Bandwidth	580 MHz
Impedance	50 Ω DC grounded
VSWR	2,5 typical
Polarisation	Horisontal or Vertical
Gain	4,5 dbi
E-plane 3 dB beamwidth	75°
H-plane 3 dB beamwidth	110°
Electrical downtilt	None
Front to back ratio	15 dB typical
Max. Continuous power	200 W
RF-connector	N
Operational windspeed	40 m/s (default)
Survival windspeed	55 m/s (default)
Wind area	0,1 m²
Dimensions (H x W x D)	400x400x160 mm
Weight	5,0 kg (antenna)
Mounting diameter	∅ 30…115 mm pipe
Materials	Aluminium and tin plated brass Glassfiber radome Glass reinforced PE
Options	-

Aerial Oy
Box 22
04401 Järvenpää
Finland
Tel. +358 9 2790 120
Fax +358 9 2910 210
http://www.aerial.fi
aerial@aerial.fi

LPD-ANTENNA LPD400-3000

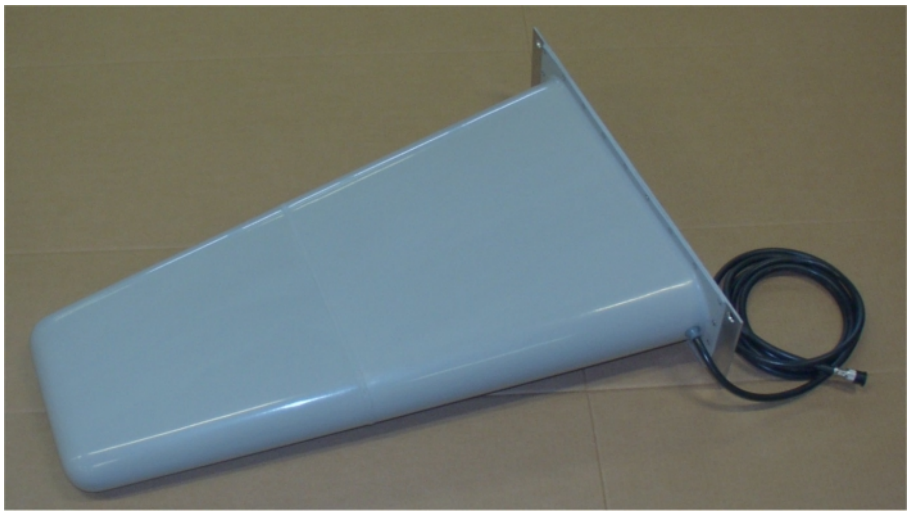

The antenna in picture is equipped with a fixed jumper.

Type	LPD400-3000
Frequency	400…3000 MHz
Bandwidth	2600 MHz
Impedance	50 Ω DC grounded
VSWR	2,0 typical
Polarisation	Horisontal or Vertical
Gain	6,5 dbi
E-plane 3 dB beamwidth	65°
H-plane 3 dB beamwidth	110°
Electrical downtilt	None
Front to back ratio	15 dB typical
Max. Continuous power	0,1 kW or 0,2 kW
RF-connector	N or 7/16 female
Operational windspeed	40 m/s (default)
Survival windspeed	55 m/s (default)
Wind area	0,1 m²
Dimensions (H x W x D)	580x160x460 mm
Weight	10,0 kg (antenna)
Mounting diameter	∅ 30…115 mm pipe
Materials	Aluminium and tin plated brass Glassfiber radome Glass reinforced PE
Options	Normal version: N-connector on the back of the antenna and 0,1 kW power rating. 7/16-version: 7/16-panel connector, fixed feed line and 0,2 kW power rating. Transport case and/or bag can be ordered separately.

Aerial Oy
Box 22
04401 Järvenpää
Finland
Tel. +358 9 2790 120
Fax +358 9 2910 210
http://www.aerial.fi
aerial@aerial.fi

LOG-PERIODIC DIPOLE ARRAY LPD80-1000

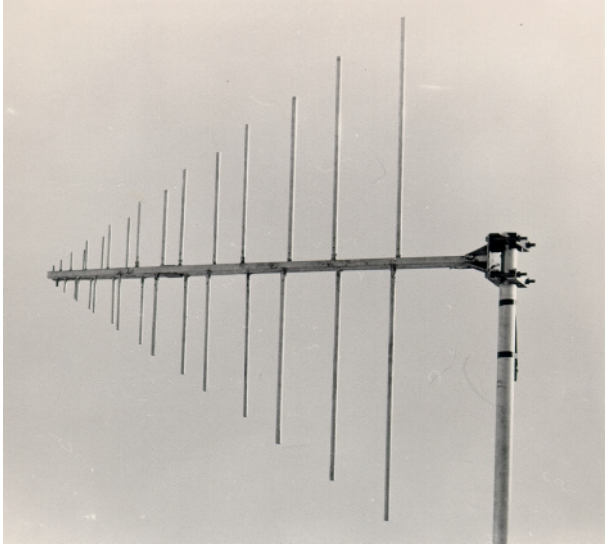

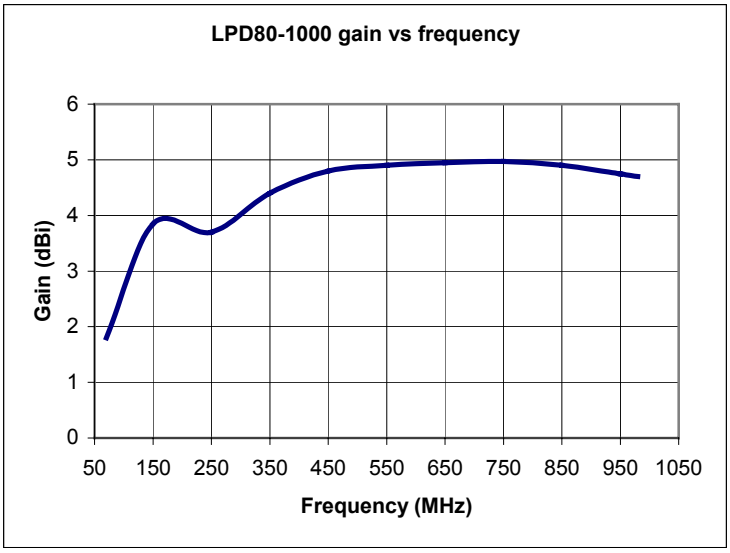

Type	LPD80-1000
Frequency	80…1000 MHz
Bandwidth	920 MHz
Impedance	50 Ω DC grounded
VSWR	2,0 typical
Polarisation	Horisontal or vertical
Gain	5 dBi
E-plane 3 dB beamwidth	70°...40° dependent on frequency
H-plane 3 dB beamwidth	120°...80° dependent on frequency
Electrical downtilt	None
Front to back ratio	10 dB...25 dB dependent on frequency
Max. Continuous power	0,5 kW
RF-connector	N or 7/16 female
Operational windspeed	40 m/s (default)
Survival windspeed	55 m/s (default)
Wind area	0,25 m²
Dimensions (HxWxD)	1900 x 1700 x 100 mm
Weight	4 kg
Mounting diameter	∅ 30…115 mm pipe
Materials	Aluminium Glass reinforced PE

Aerial Oy
Box 22
04401 Järvenpää
Finland
Tel. +358 9 2790 120
Fax +358 9 2910 210
http://www.aerial.fi
aerial@aerial.fi

LPDX-ANTENNAS LPDX30-1000, LPDX100-1000 AND LPDX100-500

PICTURE NOT AVAILABLE

Type	LPDX30-1000	LPDX100-1000	LPDX100-500
Frequency	30...1000 MHz	100...1000 MHz	100...500 MHz
Bandwidth	970 MHz	900 MHz	400 MHz
Impedance	50 Ω DC grounded	50 Ω DC grounded	50 Ω DC grounded
VSWR	2,0 max	2,0 max	2,0 max
Polarisation	Horisontal/Vertical	Horisontal/Vertical	Horisontal/Vertical
Gain	6 dbi	6 dbi	6 dbi
E-plane 3 dB beamwidth	65°	65°	65°
H-plane 3 dB beamwidth	110°	110°	110°
Electrical downtilt	None	None	None
Front to back ratio	15 dB typical	15 dB typical	15 dB typical
Max. Continuous power	0,5 kW	0,5 kW	0,5 kW
RF-connector	N or 7/16 female	N or 7/16 female	N or 7/16 female
Operational windspeed	40 m/s (default)	40 m/s (default)	40 m/s (default)
Survival windspeed	55 m/s (default)	55 m/s (default)	55 m/s (default)
Wind area	0,9 m²	0,5 m²	0,45 m²
Dimensions (H x W x D)	2600x5000x5000 mm	1200x1600x1600mm	1000x1600x1600 mm
Weight	40 kg (antenna) 1,8 kg (tube)	20 kg (antenna) 1,8 kg (tube)	10 kg (antenna) 1,8 kg (tube)
Mounting diameter	∅ 60 mm pipe	∅ 60 mm pipe	∅ 60 mm pipe
Materials	Aluminium Glassfiber radome Glass reinforced PE	Aluminium Glassfiber radome Glass reinforced PE	Aluminium Glassfiber radome Glass reinforced PE
Options	Normal version: With aluminium radiators, N-connector on a 1000 mm jumper and 1 kW power rating. High power version: With aluminium radiators, 7/16-panel connector, fixed feed line and 2 kW power rating. Carbon fiber version: All exposed radiators carbon fibre, 7/16-panel connector, fixed feed line and 2 kW power rating. Transport case and/or bag can be ordered separately.		

Aerial Oy
Box 22
04401 Järvenpää
Finland
Tel. +358 9 2790 120
Fax +358 9 2910 210
http://www.aerial.fi
aerial@aerial.fi

LPD-ANTENNA LPD1050-2200

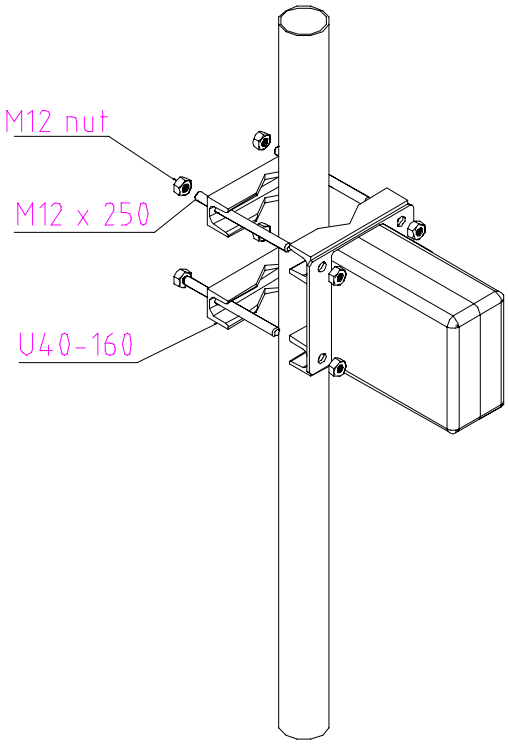

LPD1050-2200 mounted vertically on a 60 mm tube.

Type	LPD1050-2200
Frequency	1050…2200 MHz
Bandwidth	1150 MHz
Impedance	50 Ω DC grounded
VSWR	2,5 typical
Polarisation	Horisontal or Vertical
Gain	8 dbi
E-plane 3 dB beamwidth	75°
H-plane 3 dB beamwidth	110°
Electrical downtilt	None
Front to back ratio	15 dB typical
Max. Continuous power	100 W
RF-connector	N
Operational windspeed	40 m/s (default)
Survival windspeed	55 m/s (default)
Wind area	0,01 m²
Dimensions (H x W x D)	150x150x50 mm
Weight	1,0 kg (antenna)
Mounting diameter	∅ 30…115 mm pipe
Materials	Aluminium and tin plated brass Glassfiber radome Glass reinforced PE
Options	-

Aerial Oy
Box 22
04401 Järvenpää
Finland
Tel. +358 9 2790 120
Fax +358 9 2910 210
http://www.aerial.fi
aerial@aerial.fi

LPD-ANTENNA LPD120-500

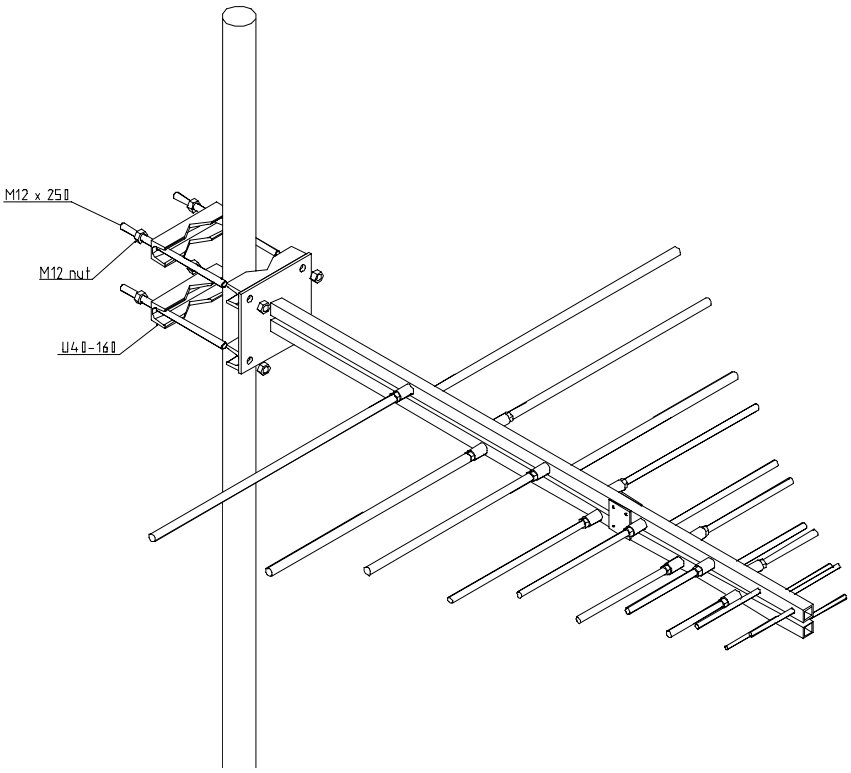

LPD120-500 mounted horisontally on a 60 mm tube.

Type	LPD120-500
Frequency	120…500 MHz
Bandwidth	380 MHz
Impedance	50 Ω DC grounded
VSWR	2,0 typical
Polarisation	Horisontal or Vertical
Gain	7 dbi
E-plane 3 dB beamwidth	75°
H-plane 3 dB beamwidth	110°
Electrical downtilt	None
Front to back ratio	15 dB typical
Max. Continuous power	300 W
RF-connector	N
Operational windspeed	40 m/s (default)
Survival windspeed	55 m/s (default)
Wind area	0,2 m²
Dimensions (H x W x D)	1200x1200x160 mm
Weight	10,0 kg (antenna)
Mounting diameter	∅ 30…115 mm pipe
Materials	Aluminium Glassfiber Glass reinforced PE
Options	Elements detachable.

Aerial Oy
Box 22
04401 Järvenpää
Finland
Tel. +358 9 2790 120
Fax +358 9 2910 210
http://www.aerial.fi
aerial@aerial.fi

LPD-ANTENNA LPD490-1050

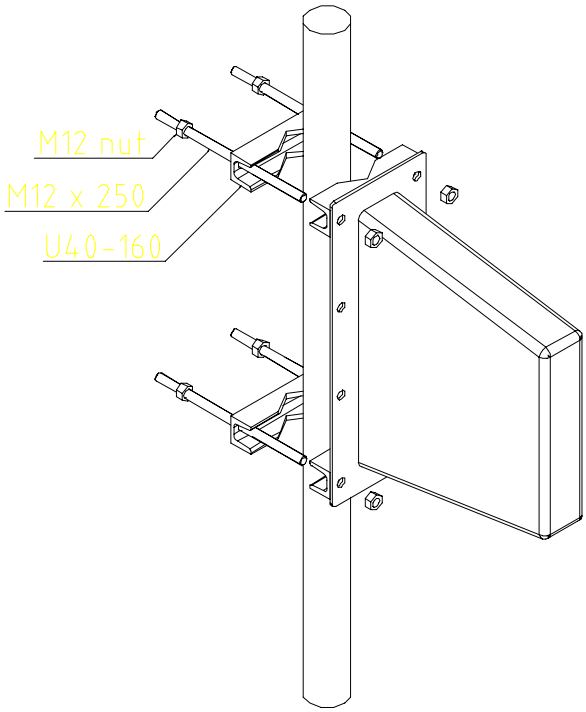

LPD490-1050 mounted vertically on a 60 mm tube.

Type	LPD490-1050
Frequency	490…1050 MHz
Bandwidth	560 MHz
Impedance	50 Ω DC grounded
VSWR	2,5 typical
Polarisation	Horisontal or Vertical
Gain	4,5 dbi
E-plane 3 dB beamwidth	75°
H-plane 3 dB beamwidth	110°
Electrical downtilt	None
Front to back ratio	15 dB typical
Max. Continuous power	200 W
RF-connector	N
Operational windspeed	40 m/s (default)
Survival windspeed	55 m/s (default)
Wind area	0,1 m²
Dimensions (H x W x D)	400x400x160 mm
Weight	5,0 kg (antenna)
Mounting diameter	∅ 30…115 mm pipe
Materials	Aluminium and tin plated brass Glassfiber radome Glass reinforced PE
Options	-

Aerial Oy
Box 22
04401 Järvenpää
Finland
Tel. +358 9 2790 120
Fax +358 9 2910 210
http://www.aerial.fi
aerial@aerial.fi

LPD-ANTENNA LPD95-1500

PICTURE NOT AVAILABLE

Type	LPD95-1500
Frequency	95…1500 MHz
Bandwidth	1405 MHz
Impedance	50 Ω DC grounded
VSWR	1,5 typical
Polarisation	Horisontal or Vertical
Gain	4,5 dbi
E-plane 3 dB beamwidth	75°
H-plane 3 dB beamwidth	110°
Electrical downtilt	None
Front to back ratio	15 dB typical
Max. Continuous power	300 W
RF-connector	N female
Operational windspeed	40 m/s (default)
Survival windspeed	55 m/s (default)
Wind area	2,0 m²
Dimensions (H x W x D)	200x1900x1630 mm
Weight	15,0 kg (antenna)
Mounting diameter	∅ 30…115 mm pipe
Materials	Aluminium Glassfiber Glass reinforced PE
Options	Elements detachable.

Aerial Oy
Box 22
04401 Järvenpää
Finland
Tel. +358 9 2790 120
Fax +358 9 2910 210
http://www.aerial.fi
aerial@aerial.fi

SLOTTED WAVEGUIDE RADAR ANTENNA ARA1834

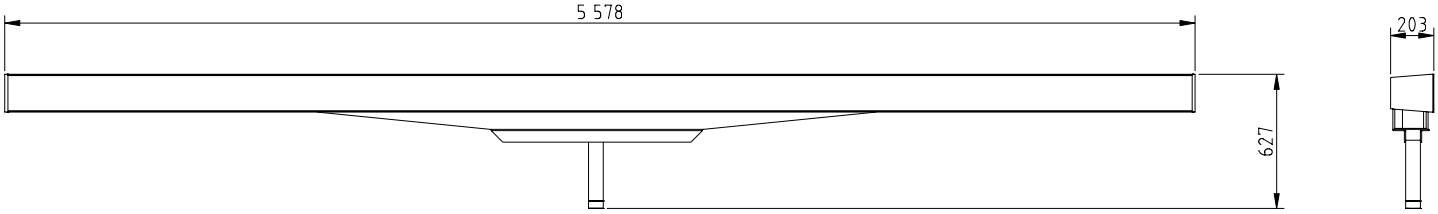

The main mechanical dimensions of ARA1834

Type	ARA1834
Frequency	9,350…9,400 GHz
Bandwidth	50 MHz
VSWR	1,2 typical
Polarisation	Horisontal
Gain	34 dbi
E-plane 3 dB beamwidth	0,45°
H-plane 3 dB beamwidth	25°
Sidelobe levels E-plane	28 dB (θ ≤ 1°) 30 dB (θ > 1°)
Max. Continuous/pulsed power	25 kW*
RF-connector	CBR 100
Operational windspeed	40 m/s (default)
Survival windspeed	55 m/s (default)
Wind area	1,5 m²
Dimensions (H x W x D)	5578 x 180 x 203 mm
Weight	80 kg
Mounting diameter	∅ 70 mm
Materials	Aluminium Glassfiber radome Glass reinforced PE
Options	Mounting tube dimensions can be customer specified. Waveguide flange type. Different frequency range.

*=Depending on pulse.

Aerial Oy
Box 22
04401 Järvenpää
Finland
Tel. +358 9 2790 120
Fax +358 9 2910 210
http://www.aerial.fi
aerial@aerial.fi

OFFSET RADAR REFLECTOR ANTENNA ARO3000

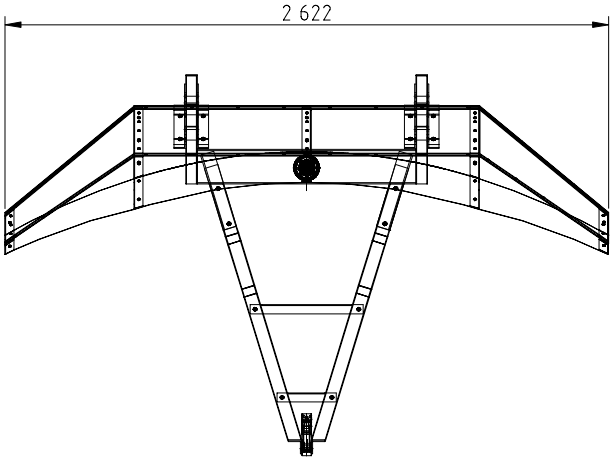

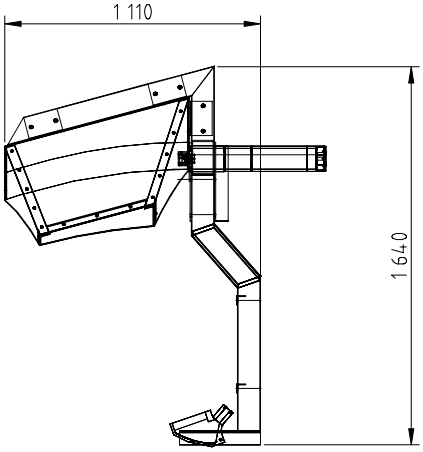

The main mechanical dimensions of ARO3000

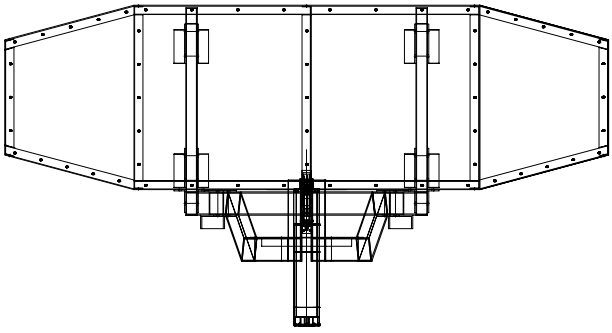

Type	ARO3000-S	ARO3000-X
Frequency	3,000…3,100 GHz	9,300…9,450 GHz
Bandwidth	100 MHz	150MHz
Impedance	50 Ω	
VSWR	1,2 typical	1,2 typical
Polarisation	Horizontal	Horizontal
Gain	31,5 dBi	41 dBi
E-plane 3 dB beamwidth	**	0,9°
H-plane 3 dB beamwidth	**	3,0°
Sidelobe levels E-plane	**	28 dB (θ ≤ 3°) 34 dB (θ > 3°)
Max. Continuous/pulsed power	25 kW*	25 kW*
RF-connector	7/16 female	CBR 100
Operational windspeed	40 m/s (default)	40 m/s (default)
Survival windspeed	55 m/s (default)	55 m/s (default)
Wind area	2,95 m²	2,95 m²
Dimensions (H x W x D)	1110 x 2622 x 1640 mm	1110 x 2622 x 1640 mm
Weight	105 kg	105 kg
Mounting diameter	∅ 70 mm	∅ 70 mm
Materials	Aluminium Glassfiber radome Glass reinforced PE	Aluminium Glassfiber radome Glass reinforced PE
Options	Mounting tube dimensions can be customer specified. Circular polarized feed horn. Connector type.	Mounting tube dimensions can be customer specified. Circular polarized feed horn. Waveguide flange type.

*=Depending on pulse. **= To be announced

Aerial Oy
Box 22
04401 Järvenpää
Finland
Tel. +358 9 2790 120
Fax +358 9 2910 210
http://www.aerial.fi
aerial@aerial.fi

OFFSET RADAR REFLECTOR ANTENNA ARO5400

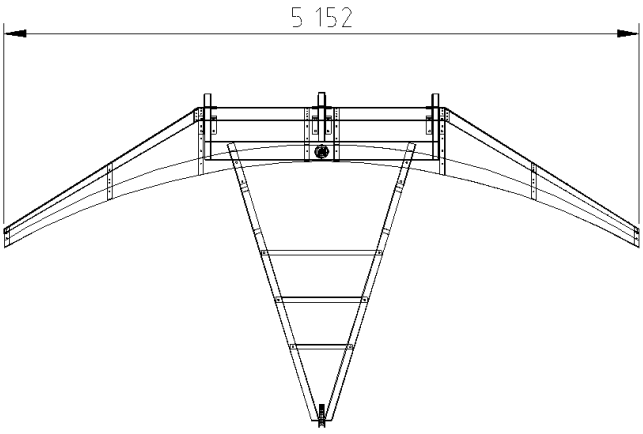

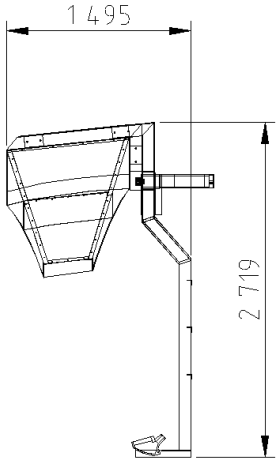

The main mechanical dimensions of ARO5400

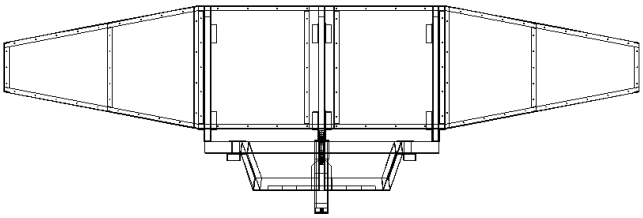

Type	ARO5400-S	ARO5400-X
Frequency	3,000…3,100 GHz	9,300…9,450 GHz
Bandwidth	100 MHz	150MHz
Impedance	50 Ω	
VSWR	1,2 typical	1,2 typical
Polarisation	Horizontal	Horizontal
Gain	35 dBi	44,5 dBi
E-plane 3 dB beamwidth	1,8°	0,6°
H-plane 3 dB beamwidth	6,3°	2,0°
Sidelobe levels E-plane	28 dB (θ ≤ 4°) 35 dB (θ > 4°)	31 dB (θ ≤ 3°) 37 dB (θ > 3°)
Max. pulse power	25 kW*	25 kW*
RF-connector	7/16 female	CBR 100
Operational windspeed	40 m/s (default)	40 m/s (default)
Survival windspeed	55 m/s (default)	55 m/s (default)
Wind area	7 m²	7 m²
Dimensions (H x W x D)	1495 x 5152 x 2719 mm	1495 x 5152 x 2719 mm
Weight	220 kg	220 kg
Mounting diameter	∅ 100 mm	∅ 100 mm
Materials	Aluminium Glassfiber radome Glass reinforced PE	Aluminium Glassfiber radome Glass reinforced PE
Options	Mounting tube dimensions can be customer specified. Circular polarization feed horn. Connector type.	Mounting tube dimensions can be customer specified. Circular polarization feed horn. Waveguide flange type.

*=Depending on pulse.

Aerial Oy
Box 22
04401 Järvenpää
Finland
Tel. +358 9 2790 120
Fax +358 9 2910 210
http://www.aerial.fi
aerial@aerial.fi

SATELLITE TV ANTENNAS

The most important element in the high quality satellite TV receiving is the antenna. The parabolic reflector antennas of Aerial Oy are pressed of two millimeter thick aluminium and they are manufactured in the very same series with the reflectors that are installed to the professional radio relay antennas.

The default colour of the antenna is light gray, other colours on request. The inclusive pedestal is made of hot dip galvanized steel.

Other custom options are heating, multifeed rack and polar axe mount.

Type	AS12	AS18	AS24
Gain at 11 GHz	40,5 dBi	43 dBi	46 dBi
Efficiency	60 %	60 %	65 %
Focal length	500 mm	630 mm	910 mm
Surface RMS error	<0,5 mm	<0,5 mm	<0,5 mm
Wind area	2,5 m²	5 m²	8 m^2
Dish diameter	1200 mm	1800 mm	2400 mm
Weight	25 kg	45 kg	70 kg

Materials: Aluminium reflector, hot dip galvanized steel pedestal
Options: Colour, multifeed, heating, polar axe mount

Aerial Oy

Box 22
04401 Järvenpää
Finland

Tel. +358 9 2790 120
Fax +358 9 2910 210

http://www.aerial.fi
aerial@aerial.fi

SATELLITE COMMUNICATION ANTENNAS

Type	AS24	AS30	AS42	AS54
Gain at 11 GHz	47 dBi	48 dBi	50,9 dBi	53,1 dBi
Beamwidth	0,8°	0,6°	0,43°	0,3°
Efficiency	65 %	65 %	65 %	65 %
Crosspol. discrimination	30 dB	30 dB	30 dB	30 dB
First sidelobe	-18 dB	-18 dB	-16 dB	-17 dB
Noise temperature at 20° elev.	45 K	43 K	40 K	40 K
Focal length	910 mm	1200 mm	2160 mm	2160 mm
Surface RMS error	<0,5 mm	<0,5 mm	<1 mm	<1 mm
Operational windspeed	15 m/s	15 m/s	15 m/s	15 m/s
Survival wind speed	55 m/s	55 m/s	55 m/s	55 m/s
Dish diameter	2400 mm	3000 mm	4200 mm	5400 mm
Weight	90 kg	165 kg	480 kg	600 kg
Options	Colour, heating, wind rating, different feed systems and frequency ranges available.			
Materials	Aluminium reflector, Hot dip galvanized steel pedestal			

Aerial Oy

Box 22
04401 Järvenpää
Finland

Tel. +358 9 2790 120
Fax +358 9 2910 210

http://www.aerial.fi
aerial@aerial.fi

LOW GAIN BASE STATION ANTENNA AV1312-1A

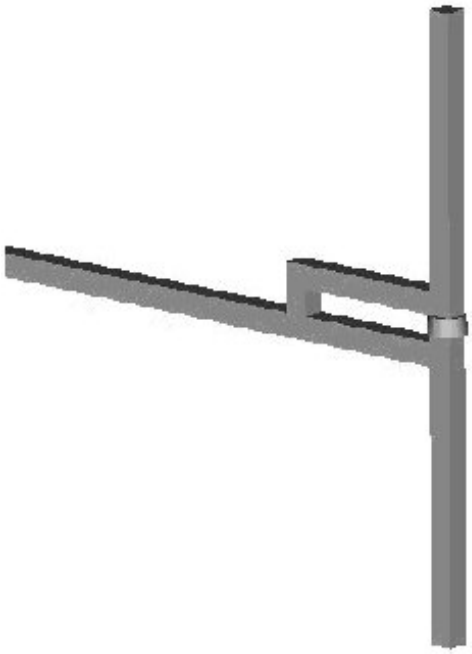

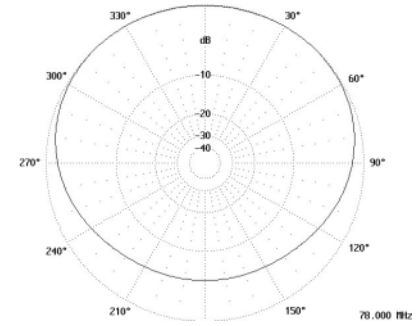

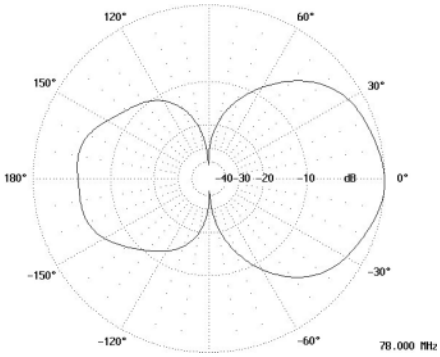

Type	AV1312-1A
Frequency	118...144 MHz
Bandwidth	26 MHz
Impedance	50 Ω DC grounded
VSWR	1,5 max/depending on mounting
Polarisation	Vertical
Gain	2 dBi
E-plane 3 dB beamwidth	70°
H-plane 3 dB beamwidth	200°/depending on mounting
Electrical downtilt	None
Front to back ratio	6 dB/depending on mounting
Max. Continuous power	0,5 kW
RF-connector	N or 7/16 female
Operational windspeed	40 m/s (default)
Survival windspeed	55 m/s (default)
Wind area	0,04 m²
Dimensions (H x W x D) (∅ x H)	1150 x 70 x 1150 mm
Weight	4 kg
Mounting diameter	∅ 30...115 mm pipe
Materials	Aluminium Glass reinforced PE
Options	-

Aerial Oy

Box 22
04401 Järvenpää
Finland

Tel. +358 9 2790 120
Fax +358 9 2910 210

http://www.aerial.fi
aerial@aerial.fi

DUAL BAND DIPOLE AV1319

Type	AV1319
Frequency	-160/390: 155-165 / 380-400 MHz -160/450: 160-174 / 440-460 MHz
Bandwidth	-160/390: 10 / 20 MHz -160/450: 14 / 20 MHz
Impedance	50 Ω DC grounded
VSWR	1,5 max
Polarisation	Vertical
Gain	2,1 / 4 dBi
E-plane 3 dB beamwidth	80 / 45°
H-plane 3 dB beamwidth	200°/depending on mounting
Electrical downtilt	None
Front to back ratio	3 dB/depending on mounting
Max. Continuous power	0,5 kW
RF-connector	N female
Operational windspeed	40 m/s (default)
Survival windspeed	55 m/s (default)
Wind area	0,2 m²
Dimensions (H x W x D) (∅ x H)	810 x 1050 x 160 mm
Weight	6 kg
Mounting diameter	∅ 30…115 mm pipe
Materials	Aluminium Glassfiber radome
Options	Connector type Other frequency range combinations

Aerial Oy
Box 22
04401 Järvenpää
Finland
Tel. +358 9 2790 120
Fax +358 9 2910 210
http://www.aerial.fi
aerial@aerial.fi

AV1780 ROTATABLE DIRECTIONAL MARINE ANTENNA SYSTEM

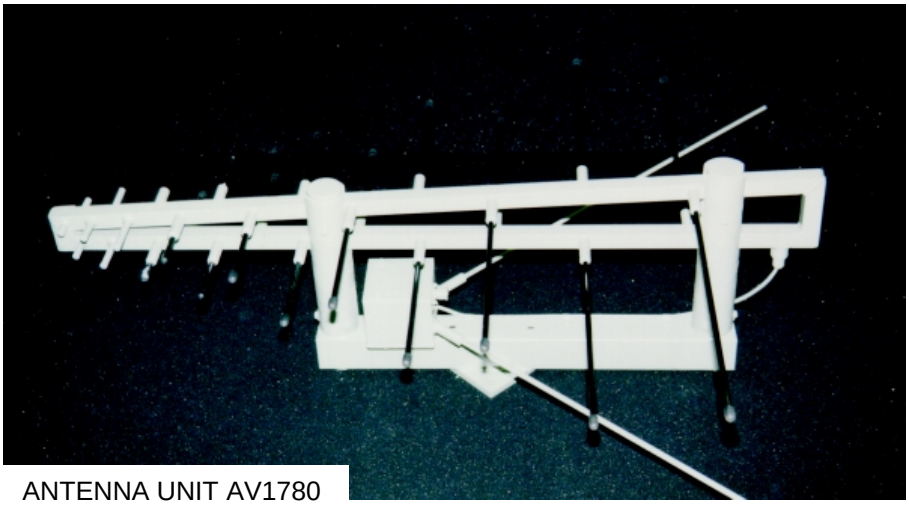

ANTENNA UNIT AV1780

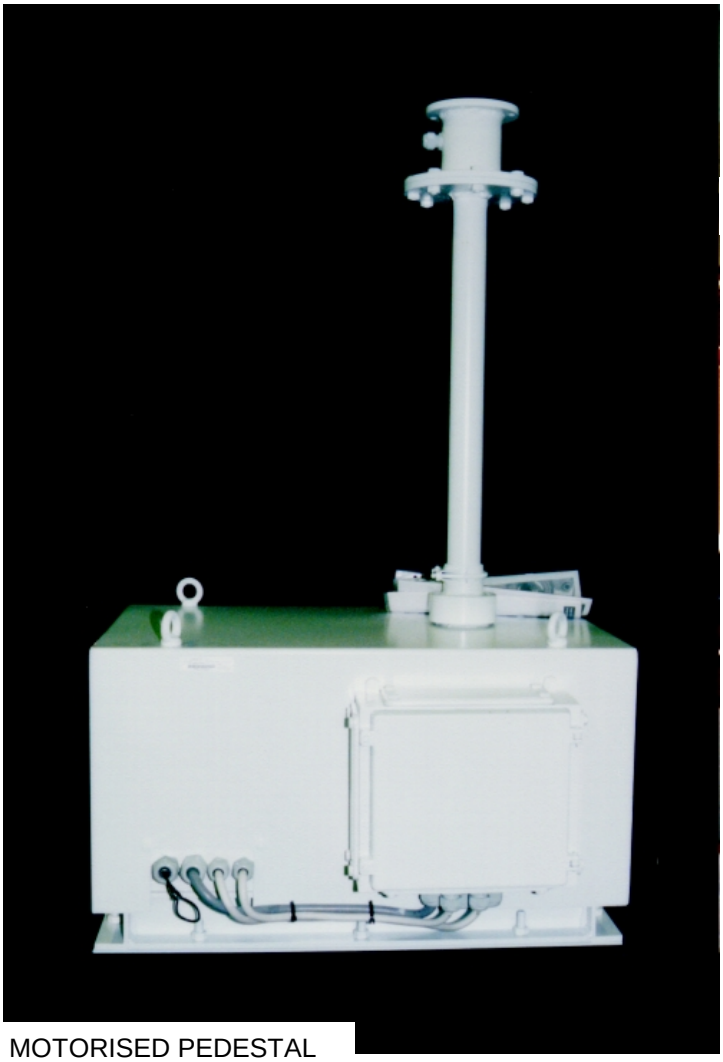

MOTORISED PEDESTAL

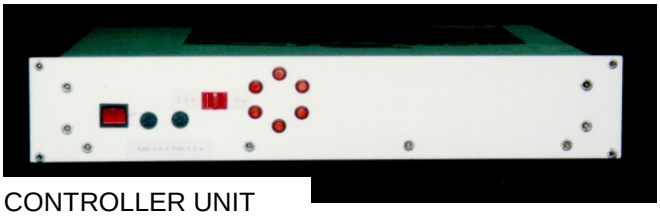

CONTROLLER UNIT

Type	AV1780
Frequency	88...108 MHz (V-dipole) 175...800 MHz (LPDA)
Bandwidth	20 MHz / 625 MHz
Impedance	50 Ω DC grounded
VSWR	2,5 max
Polarisation	Horisontal
Gain	0 dBi (88...108 MHz) 7 dBi (175...800 MHz)
E-plane 3 dB beamwidth	Dependent on frequency
H-plane 3 dB beamwidth	Dependent on frequency
Electrical downtilt	None
Front to back ratio	15 dB (175...800 MHz)
Max. Continuous power	0,5 kW
RF-connector	N female
Operational windspeed	40 m/s (default)
Survival windspeed	55 m/s (default)
Wind area	0,50 m² with pedestal 0,15 m² antenna only
Dimensions (HxWxD)	510x891x1345 mm
Weight	8 kg
Materials	Aluminium Carbon fiber Glass reinforced PE
AC Power	3 phase 220 V
Options	Motorised pedestal 19" controller unit

Aerial Oy

Box 22
04401 Järvenpää
Finland

Tel. +358 9 2790 120
Fax +358 9 2910 210

http://www.aerial.fi
aerial@aerial.fi

MULTIBAND OMNIDIRECTIONAL ANTENNA AV1950

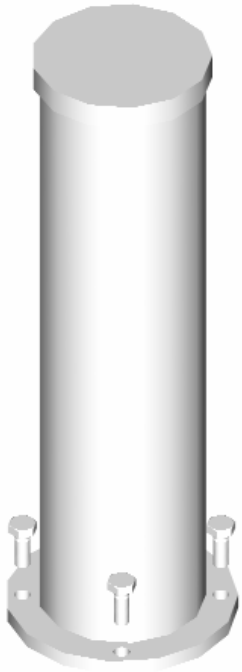

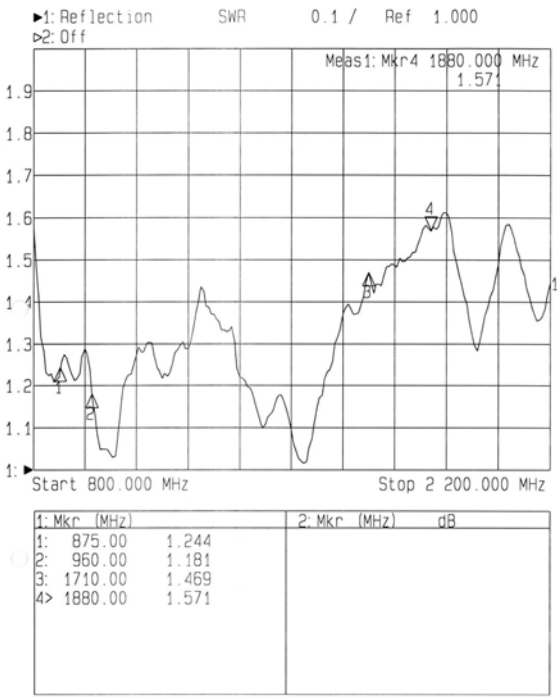

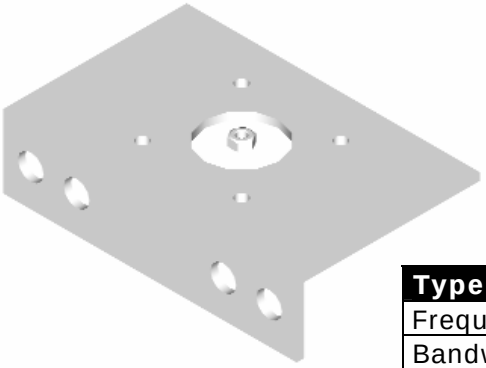

AV1950 can be installed either with the standard AETM160-6-L mounting set or directly from the round flange.

Type	AV1950
Frequency	870...2170 MHz
Bandwidth	1300 MHz
Impedance	50 Ω
VSWR	1,5 typical
Polarisation	Vertical
Gain	2...4 dBi
E-plane 3 dB beamwidth	70...35°
H-plane 3 dB beamwidth	-°
Electrical downtilt	None
Front to back ratio	- dB
Max. Continuous power	0,5 kW
RF-connector	N-female
Operational windspeed	40 m/s (default)
Survival windspeed	55 m/s (default)
Wind area	0,2 m²
Dimensions (H x W x D) (∅ x H)	360 x 80 x 160 mm
Weight	1,5 kg
Mounting diameter	∅ 30...115 mm pipe or flange
Materials	Aluminium Glassfiber radome Glass reinforced PE
Options	Connector type

Aerial Oy
Box 22
04401 Järvenpää
Finland
Tel. +358 9 2790 120
Fax +358 9 2910 210
http://www.aerial.fi
aerial@aerial.fi

REINFORCED WUCS-BASESTATION ANTENNA AV2062-S

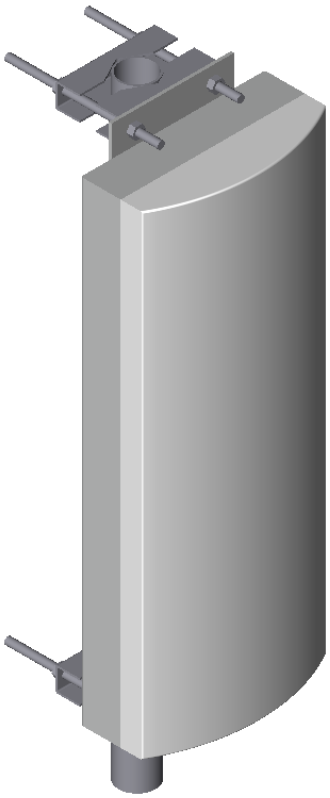

S = ”Reinforced”

The antenna construction includes 3 mm thick aluminium framework, power divider and the radiating elements shielded with an UV-resistant fibreglass radome. The extra-strong glass fiber radome does not react on matching so the antenna maintains it’s SWR performance even if covered by heavy snow and ice.

The low intermodulation values are secured by qualitative connections and precise manufacturing.

The standard inclusive (unless agreed otherwise) mounting kit provides easy installation for the tube diameters from 30 mm to 115 mm.

The durability and high performance of the AV206 series provides you a real corner-stone for your cellular network in any conditions.

Type	**AV2062-S**
Frequency	800…1000 MHz
Bandwidth	200 MHz
Impedance	50 Ω DC grounded
VSWR	1,5 max
Polarisation	Vertical
Gain	13 dbi
E-plane 3 dB beamwidth	30°
H-plane 3 dB beamwidth	62°
Electrical downtilt	None
Front to back ratio	25 dB
Max. Continuous power	0,5 kW
RF-connector	7/16 female
Operational windspeed	40 m/s (default)
Survival windspeed	55 m/s (default)
Wind area	0,2 m²
Dimensions (H x W x D) (∅ x H)	655/725 x 300 x 140 mm
Weight	4,8 kg
Mounting diameter	∅ 30…115 mm pipe
Materials	Aluminium Glassfiber radome Glass reinforced PE
Options	Colour

Aerial Oy
Box 22
04401 Järvenpää
Finland
Tel. +358 9 2790 120
Fax +358 9 2910 210
http://www.aerial.fi
aerial@aerial.fi

REINFORCED WUCS-BASESTATION ANTENNA AV2091-S

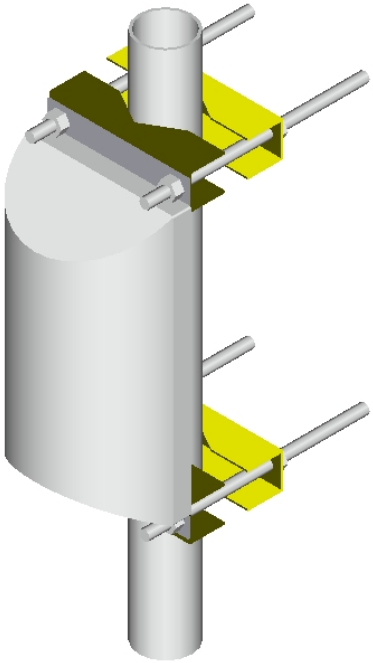

The antenna in the picture is attached to a ∅60 mm pipe with a mounting kit included in package.

Type	AV2091-S
Frequency	800…1000 MHz
Bandwidth	200 MHz
Impedance	50 Ω DC grounded
VSWR	1,5 max
Polarisation	Vertical
Gain	9 dbi
E-plane 3 dB beamwidth	56°
H-plane 3 dB beamwidth	115°
Electrical downtilt	None
Front to back ratio	20 dB
Max. Continuous power	0,5 kW
RF-connector	7/16 female
Operational windspeed	40 m/s (default)
Survival windspeed	55 m/s (default)
Wind area	0,05 m²
Dimensions (H x W x D) (∅ x H)	265/335 x 160 x 115 mm
Weight	1,4 kg
Mounting diameter	∅ 30…115 mm pipe
Materials	Aluminium Glassfiber radome Glass reinforced PE
Options	Colour

Aerial Oy

Box 22
04401 Järvenpää
Finland

Tel. +358 9 2790 120
Fax +358 9 2910 210

http://www.aerial.fi
aerial@aerial.fi

AV21-SERIES

Type	AV2100-SP	AV2100-CP	AV2100-DP
Frequency	850...870 MHz	850...870 MHz	850...870 MHz
Bandwidth	20 MHz	20 MHz	20 MHz
Impedance	50 Ω DC grounded	50 Ω DC grounded	50 Ω DC grounded
VSWR	2,0 max.	2,0 max.	2,0 max.
Polarisation	Linear	Left hand Circular	Dual linear
Isolation	-	-	25 dB min.
Gain	7,5 dBi	7,5 dBi	7,5 dBi
Horisontal 3 dB beamwidth	90°	90°	90°
Vertical 3 dB beamwidth	70°	70°	70°
Electrical downtilt	None	None	None
Front to back ratio	20 dB	20 dB	20 dB
Max. Continuous power	0,25 kW	0,25 kW	0,25 kW
RF-connector	N female	N female	2 x N female
Operational windspeed	40 m/s (default)	40 m/s (default)	40 m/s (default)
Survival windspeed	55 m/s (default)	55 m/s (default)	55 m/s (default)
Wind area	0,07 m^2	0,07 m^2	0,07 m^2
Dimensions (H x W x D)	228 x 305 x42 mm	228 x 305 x42 mm	228 x 305 x42 mm
Weight	0,5 kg	0,5 kg	0,5 kg
Mounting diameter	4xM6 threads symmetrically on a 80x190 mm rectangle behind the antenna.	4xM6 threads symmetrically on a 80x190 mm rectangle behind the antenna.	4xM6 threads symmetrically on a 80x190 mm rectangle behind the antenna.
Materials	Aluminium Glassfiber radome Glass reinforced PE	Aluminium Glassfiber radome Glass reinforced PE	Aluminium Glassfiber radome Glass reinforced PE
Options	-	-	-

Aerial Oy

Box 22
04401 Järvenpää
Finland

Tel. +358 9 2790 120
Fax +358 9 2910 210

http://www.aerial.fi
aerial@aerial.fi

AV2100-SP AND AV2100-CP

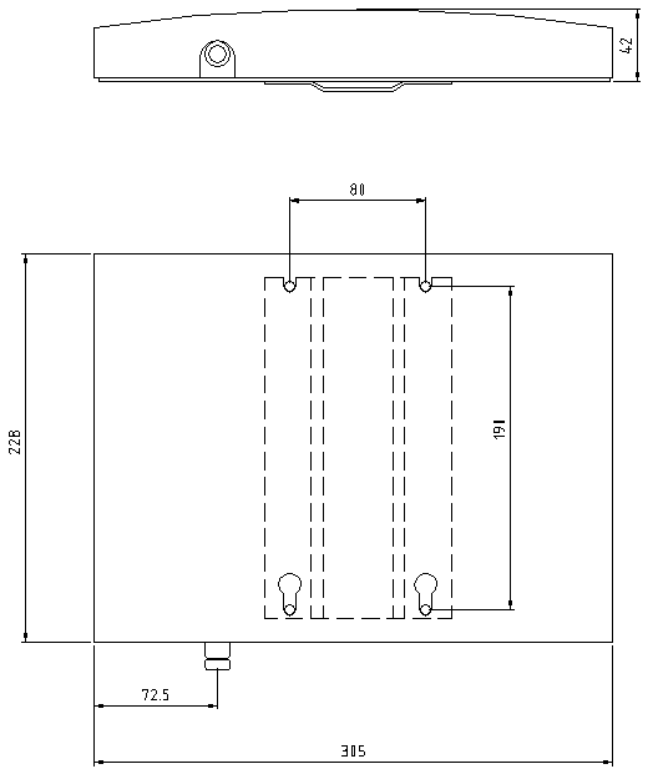

AV2100-DP

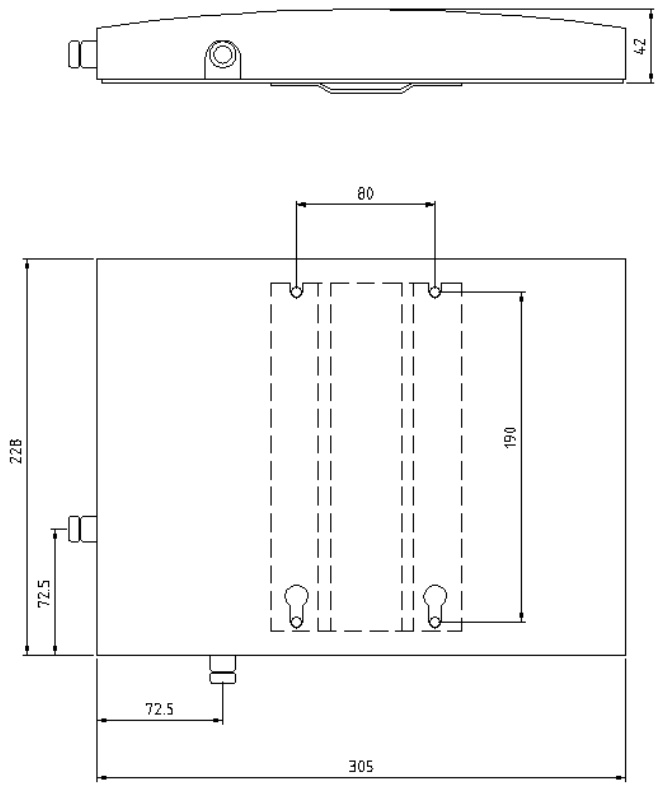

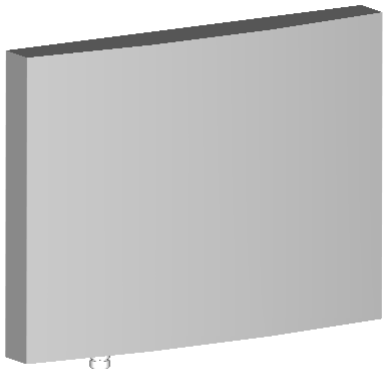

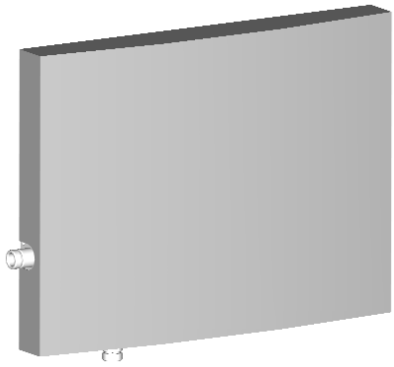

The AV21-series offer an affordable selection of three antennas all with same external dimensions and mounting method. The AV2100-SP and AV2100-CP are equipped with single and AV2100-DP with two N-female panel connectors.

Aerial Oy
Box 22
04401 Järvenpää
Finland
Tel. +358 9 2790 120
Fax +358 9 2910 210
http://www.aerial.fi
aerial@aerial.fi

REINFORCED GSM900 BASESTATION ANTENNA AV2124-925F73

The AV2124-925F73 antenna construction includes thick (s=3mm) aluminium framework, power divider and the radiating elements shielded with a heavy duty UV-resistant fibreglass radome (s=3mm). The radome does not react on matching so the antenna maintains it's SWR performance even if covered by heavy snow and ice.

The low intermodulation values are secured by qualitative connections and precise manufacturing.

The standard inclusive heavy duty (unless agreed otherwise) mounting kit provides easy installation for the tube diameters from 30 mm to 115 mm. There is also a heavy duty tilt mounting kit available.

Type	**AV2124-925F73**
Frequency	890...960 MHz
Bandwidth	70 MHz
Impedance	50 Ω DC grounded
VSWR	1,3 max
Polarisation	Vertical
Gain	12,5 dBi
E-plane 3 dB beamwidth	15°
H-plane 3 dB beamwidth	120°
Electrical downtilt	None
Front to back ratio	20 dB
Max. Continuous power	0,5 kW
RF-connector	7/16 female
Operational windspeed	70 m/s
Survival windspeed	90 m/s
Wind area	0,25 m²
Dimensions (H x W x D) (∅ x H)	1140 x160 x110 mm
Weight	1)Antenna 4,0 kg 2)Heavy duty mounting kit 4,0 kg 3)Heavy duty tilt mounting kit 8,0 kg (Includes pos. 2)
Mounting diameter	∅ 30...115 mm pipe
Materials	Aluminium (frame s=3 mm) Glassfiber radome (s=3mm), UV-resistant Glass reinforced PE, UV-resistant
Options	-

Aerial Oy
Box 22
04401 Järvenpää
Finland
Tel. +358 9 2790 120
Fax +358 9 2910 210
http://www.aerial.fi
aerial@aerial.fi

BROAD BAND DIPOLE D0113

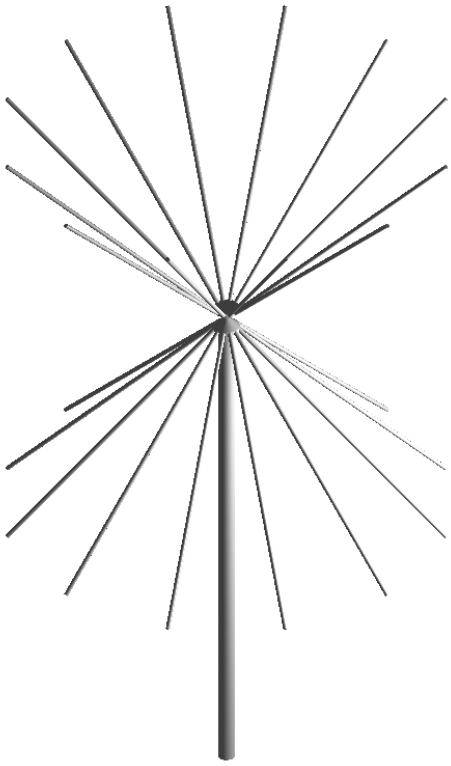

Type	D0113
Frequency	100 MHz...1300 MHz
Bandwidth	1200 MHz
Impedance	50 Ω
VSWR	2,5 max
Polarisation	Vertical
Gain	2 dbi
E-plane 3 dB beamwidth	50°...80°
H-plane 3 dB beamwidth	- °
Electrical downtilt	None
Front to back ratio	- dB
Max. Continuous power	0,5 kW
RF-connector	N or 7/16 female
Operational windspeed	40 m/s (default)
Survival windspeed	55 m/s (default)
Wind area	0,23 m²
Dimensions (H x W x D) (∅ x H)	1930 x 1060 x 1060
Weight	5,0 kg
Mounting diameter	∅ 30...115 mm pipe
Materials	Aluminium Glassfiber
Options	Size dipoles detached HxWxD 1400 x 100 x 100

Aerial Oy

Box 22
04401 Järvenpää
Finland

Tel. +358 9 2790 120
Fax +358 9 2910 210

http://www.aerial.fi
aerial@aerial.fi

BROAD BAND DIPOLE D0750

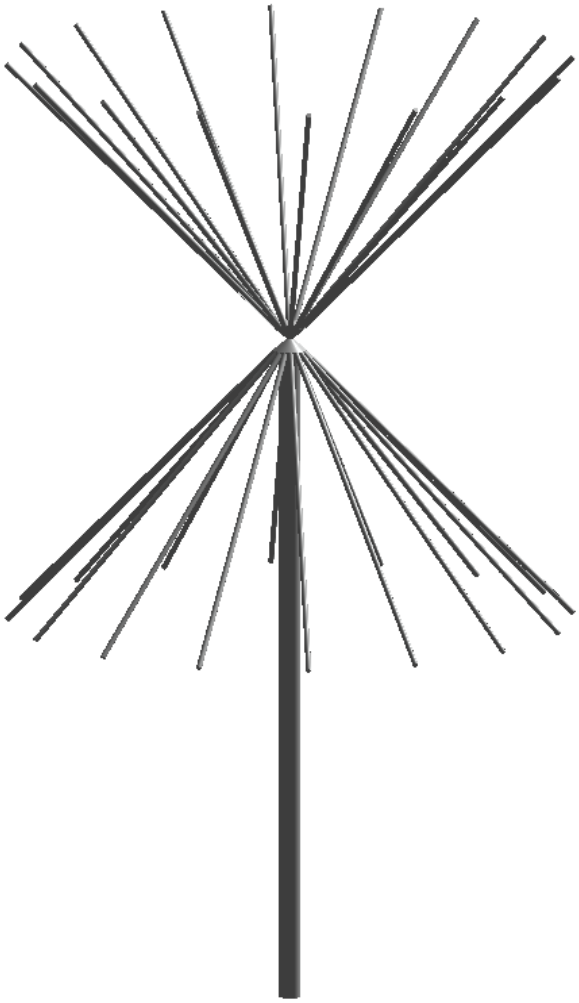

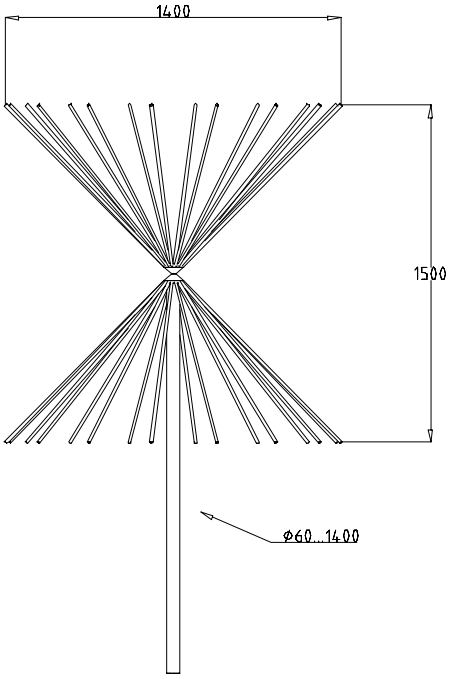

Type	D0750
Frequency	70...500 MHz
Bandwidth	430 MHz
Impedance	50 Ω
VSWR	2,0 typical
Polarisation	Vertical
Gain	2 dBi
E-plane 3 dB beamwidth	70°
H-plane 3 dB beamwidth	-
Electrical downtilt	None
Front to back ratio	-
Max. Continuous power	0,4 kW
RF-connector	N or 7/16 female
Operational windspeed	40 m/s (default)
Survival windspeed	55 m/s (default)
Wind area	0,4 m²
Dimensions (HxWxD)	See picture
Weight	8 kg
Mounting diameter	∅ 30...115 mm pipe
Materials	Aluminium Glass reinforced PE
Options	-

Aerial Oy
Box 22
04401 Järvenpää
Finland
Tel. +358 9 2790 120
Fax +358 9 2910 210
http://www.aerial.fi
aerial@aerial.fi

BICONICAL ANTENNA D100-1000

Type	D100/1000
Frequency	100...1000 MHz
Bandwidth	900 MHz
Impedance	50 Ω DC grounded
VSWR	2,0 max
Polarisation	Vertical
Gain	2 dBi
E-plane 3 dB beamwidth	70˚
H-plane 3 dB beamwidth	-
Electrical downtilt	None
Front to back ratio	-
Max. Continuous power	0,5 kW
RF-connector	N or 7/16 female
Operational windspeed	40 m/s (default)
Survival windspeed	55 m/s (default)
Wind area	0,45 m²
Dimensions (∅xH)	∅400/60 mmx2100 mm
Weight	17 kg
Mounting diameter	∅ 30...115 mm pipe
Materials	Aluminium Glassfiber radome Glass reinforced PE Hot dip galvanised steel
Options	Available with both aluminium and steel pedestal

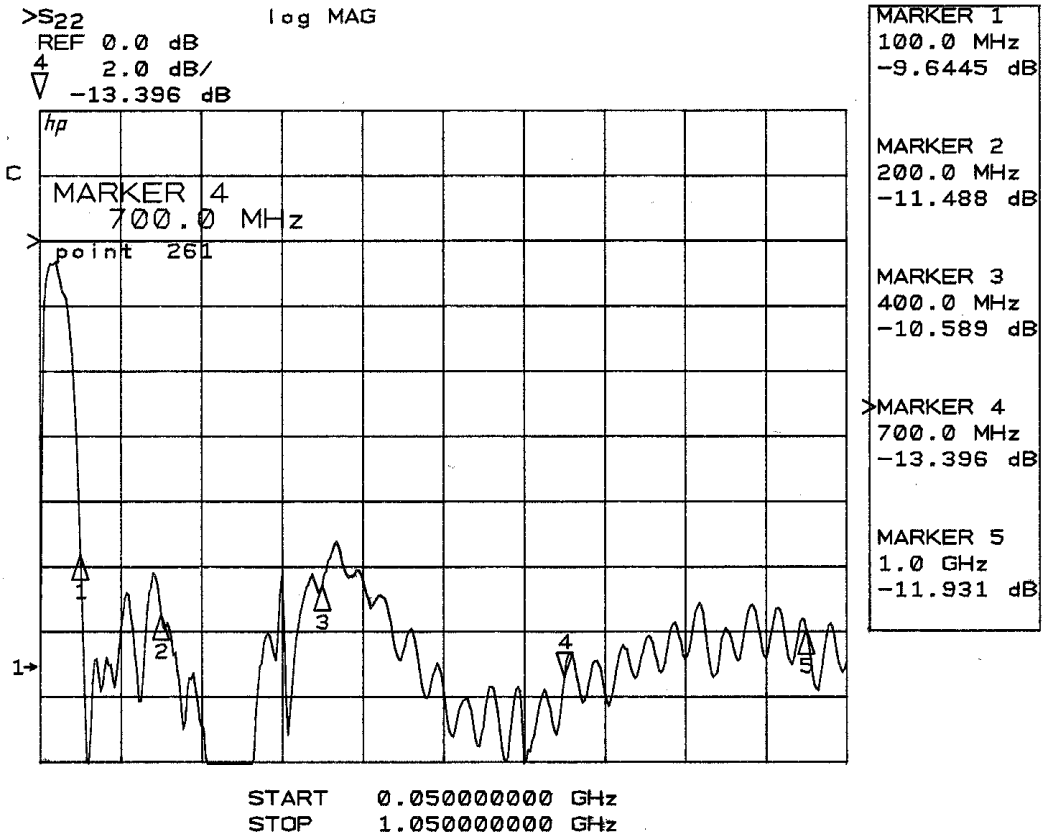

Aerial Oy
Box 22
04401 Järvenpää
Finland
Tel. +358 9 2790 120
Fax +358 9 2910 210
http://www.aerial.fi
aerial@aerial.fi

BICONICAL ANTENNA D100-400

Type	D100-400
Frequency	100...400 MHz
Bandwidth	300 MHz
Impedance	50 Ω DC grounded
VSWR	2,0 max
Polarisation	Vertical
Gain	2 dBi
E-plane 3 dB beamwidth	70°
H-plane 3 dB beamwidth	-
Electrical downtilt	None
Front to back ratio	-
Max. Continuous power	0,5 kW
RF-connector	N or 7/16 female
Operational windspeed	40 m/s (default)
Survival windspeed	55 m/s (default)
Wind area	0,65 m²
Dimensions (H x W x D) (∅ x H)	∅400/∅60 x 2100 mm
Weight	17 kg
Mounting diameter	∅ 30...115 mm pipe
Materials	Aluminium Glassfiber radome Glass reinforced PE Hot dip galvanised steel
Options	Mounting tube length 900 mm

Aerial Oy
Box 22
04401 Järvenpää
Finland
Tel. +358 9 2790 120
Fax +358 9 2910 210
http://www.aerial.fi
aerial@aerial.fi

HFD3-28 SHIP ANTENNA

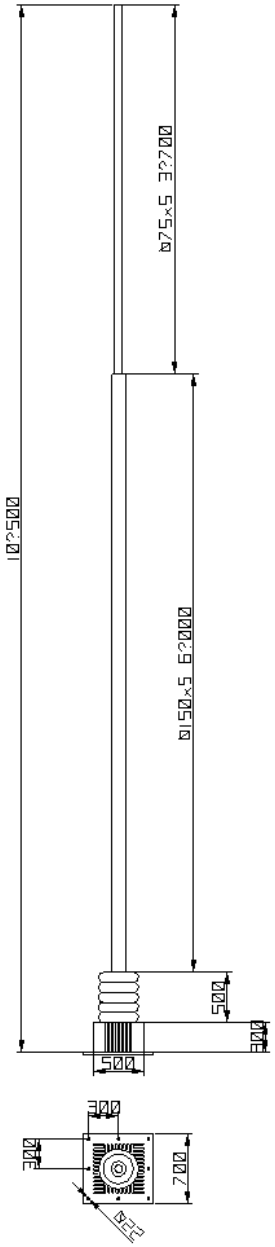

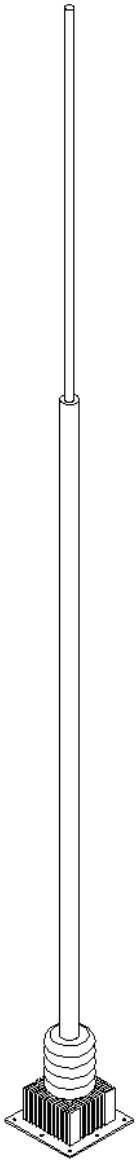

Type	HFD3-28
Frequency	3...28 MHz
Bandwidth	25 MHz
Impedance	50 Ω DC grounded
VSWR	3,5 max
Polarisation	Vertical
Gain (theoretical)	4,5...8 dbi
Efficiency	15% at 3 MHz 95% at 6...24 MHz 60% at 28 MHz
RF-connector	EIA 7/8''
Survival windspeed	62,5 m/s (default)
Wind area	1,5 m²
Dimensions (HxWxD)	10500x150x150 mm
Weight	100 kg
Mounting diameter	Customer specified
Materials	Aluminium mast Glassfiber baseinsulator
Options	RF-connector Mounting flange dimensions

HFD3-28 main mechanical dimensionsions

HFD3-28 is a passive HF-dipole with tuning circuit consisting of resistive and reactive elements to enable broadband tuning. The theoretical gain of this antenna is 4,5...8 dBi, but due to these tuning elements 75...5% of this gain is lost.

Aerial Oy

Box 22
04401 Järvenpää
Finland

Tel. +358 9 2790 120
Fax +358 9 2910 210

http://www.aerial.fi
aerial@aerial.fi

AV1370 OMNIDIRECTIONAL VHF ANTENNA

General information

AV1370 is a lightweight omnidirectional VHF antenna for frequency range of 120-180 MHz. There are two models for different frequencies as shown in the data table. Other frequencies are available as an option on request.

The installation of the antenna is made handy with finger screws. The antenna is designed to be installed to the top or side of a ∅38 mm pipe.

Type	AV1370
Frequency range	Within 120…180 MHz 138…150 MHz (AV1370-1) 150…174 MHz (AV1370-2)
Bandwidth	±7 %
Impedance	50 Ω DC grounded
VSWR	2,0 max
Polarisation	Vertical
Gain	4 dBi, dependent on mounting
E-plane 3 dB beamwidth	70°
H-plane 3 dB beamwidth	200°, dependent on mounting
Electrical downtilt	None
Front to back ratio	6 dB, dependent on mounting
Max. Continuous power	50 W
RF-connector	BNC male
Operational windspeed	40 m/s (default)
Survival windspeed	55 m/s (default)
Operating temperature	-40 +55 °C
Wind area	0,05 m²
Dimensions (H x W x D)	100 x 65 x 525 mm
Weight	0,6 kg
Mounting diameter	∅ 38 mm pipe
Materials	Anodized Aluminium Stanless steel Glass reinforced PE
Colour	Black
Options	Connector type Frequency

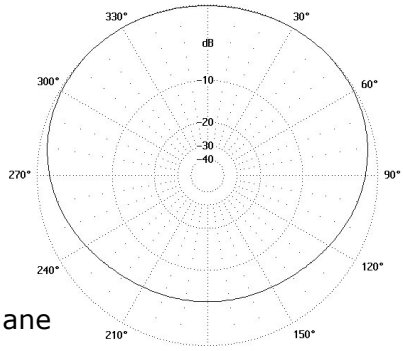

H-plane

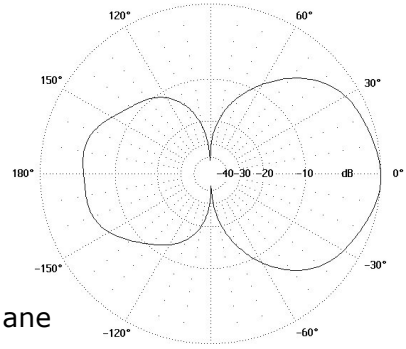

E-plane

Aerial Oy
Box 22
04401 Järvenpää
Finland
Tel. +358 9 2790 120
Fax +358 9 2910 210
http://www.aerial.fi
aerial@aerial.fi

FIELD ANTENNA D30-90-1

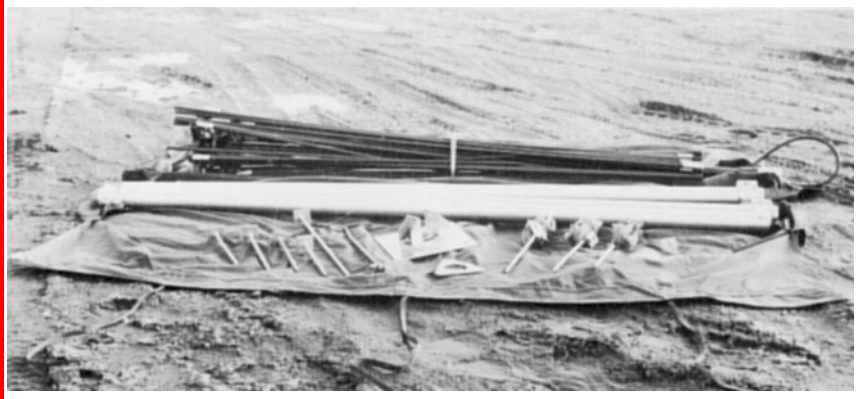

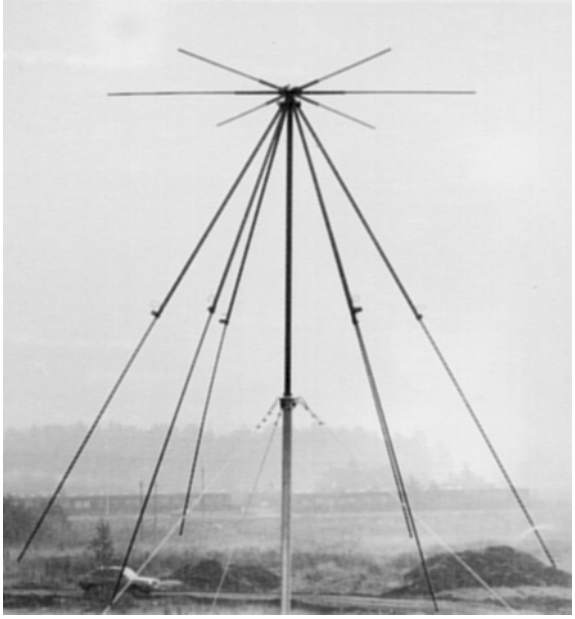

D30-90-1 before and after installation.

Type	D30-90-1
Frequency	30...90 MHz
Bandwidth	60 MHz
Impedance	50 Ω
VSWR	2,0 typical
Polarisation	Vertical
Gain	2...3 dBi
E-plane 3 dB beamwidth	70...90°
H-plane 3 dB beamwidth	Omnidirectional
Electrical downtilt	None
Front to back ratio	-
Max. Continuous power	0,5 kW
RF-connector	N or UHF female
Operational windspeed	40 m/s (default)
Survival windspeed	55 m/s (default)
Wind area	0,5 m²
Dimensions (H x W x D) (∅ x H)	2200 x 2360 x 2360 mm (in use) 2300 x 150 mm (in transport)
Weight	12 kg
Mounting diameter	∅ 60 mm pipe (mast PM6/60)
Materials	Aluminium Glassfiber radome Glass reinforced PC
Options	Includes an aluminum mast PM6/60 (h=6 m and D=60mm) with accessories.

Aerial Oy
Box 22
04401 Järvenpää
Finland
Tel. +358 9 2790 120
Fax +358 9 2910 210
http://www.aerial.fi
aerial@aerial.fi

LOG-PERIODIC DIPOLE ARRAY LPD30-90-1

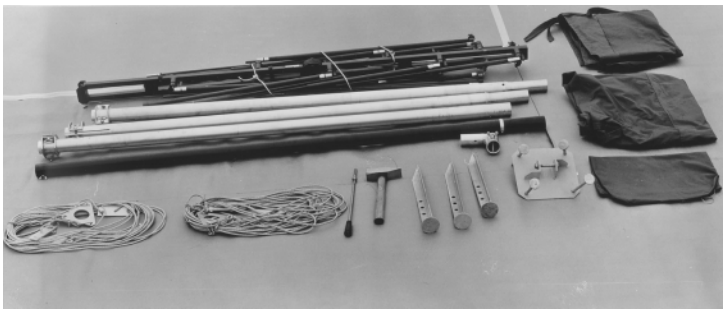

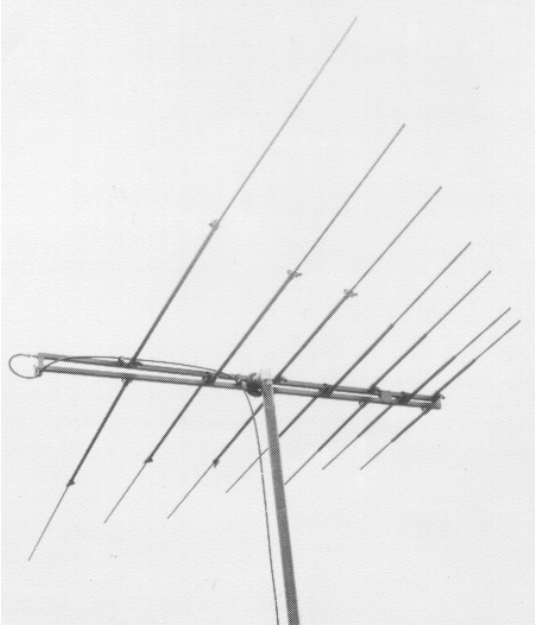

LPD30-90-1 before and after installation.

Type	LPD30-90-1
Frequency	30…90 MHz
Bandwidth	60 MHz
Impedance	50 Ω DC grounded
VSWR	2,0 max
Polarisation	Horisontal or Vertical
Gain	3...6 dBi
E-plane 3 dB beamwidth	65°...60° dB dependent on frequency
H-plane 3 dB beamwidth	115°...75° dB dependent on frequency
Electrical downtilt	None
Front to back ratio	15 dB...25 dB dependent on frequency
Max. Continuous power	0,5 kW
RF-connector	N or 7/16 female
Operational windspeed	40 m/s (default)
Survival windspeed	55 m/s (default)
Wind area	0,5 m²
Dimensions (HxWxD)	100x5300x2380 mm
Weight	13 kg
Mounting diameter	∅ 60 mm pipe (mast PM6/60)
Materials	Aluminium Glass reinforced PE
Options	Includes an aluminum mast PM6/60 (h=6 m and D=60mm) with accessories. Also available with carbon fiber elements.

Aerial Oy
Box 22
04401 Järvenpää
Finland
Tel. +358 9 2790 120
Fax +358 9 2910 210
http://www.aerial.fi
aerial@aerial.fi

BICONICAL ANTENNA D100-512

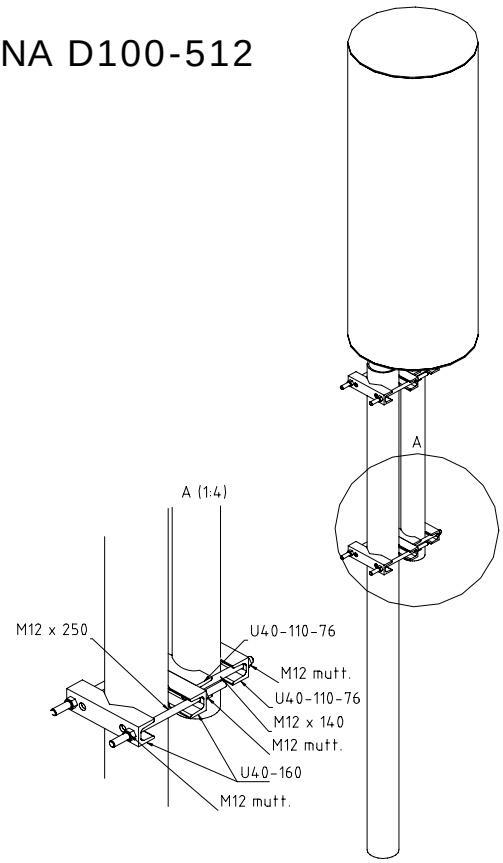

Type	D100-512
Frequency	100...512 MHz
Bandwidth	412 MHz
Impedance	50 Ω DC grounded
VSWR	2,0 typical, 2,5 max
Polarisation	Vertical
Gain	Typical 2 dBi
E-plane 3 dB beamwidth	130°...70°
H-plane 3 dB beamwidth	-
Electrical downtilt	None
Front to back ratio	-
Max. Continuous power	500 W, limited by RF-connector
RF-connector	N-female
Operational windspeed	40 m/s (default)
Survival windspeed	55 m/s (default)
Wind area	0,65 m²
Dimensions (H x W x D) (∅ x H)	∅400/∅76 x 2100 mm
Weight	29 kg without mounting accessories. Mounting accessories 6 kg.
Mounting diameter	∅ 30...115 mm pipe
Materials	Aluminium Glassfiber radome Glass reinforced PE Hot dip galvanised steel Mounting tube ∅76 x 900 mm
Options	Different mounting methods available.

Aerial Oy
Box 22
04401 Järvenpää
Finland
Tel. +358 9 2790 120
Fax +358 9 2910 210
http://www.aerial.fi
aerial@aerial.fi

FIELD ANTENNA D20-100-DISC

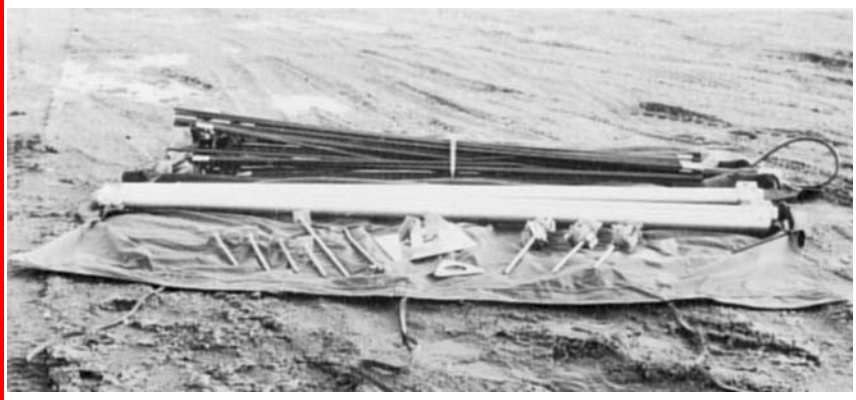

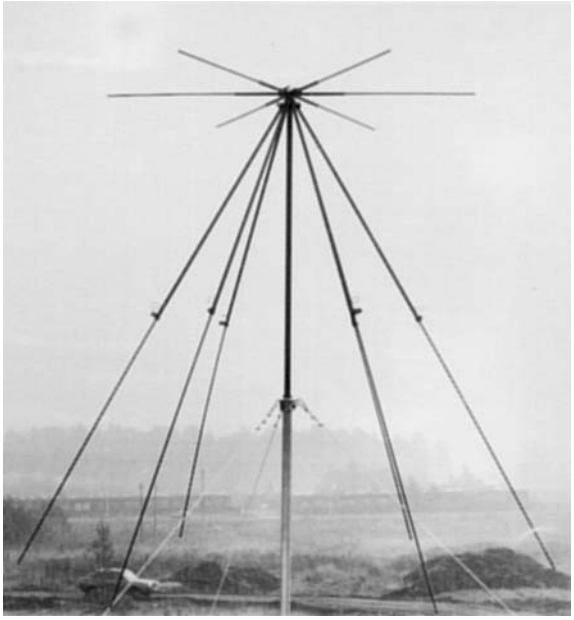

D20-100-DISC before and after installation (all aluuminium version). With optional PM6/60 aluminium tubemast.

Type	D20-100-DISC
Frequency	20...100 MHz
Bandwidth	80 MHz
Impedance	50 Ω
VSWR	2,0 typical
Polarisation	Vertical
Gain	2...3 dBi
E-plane 3 dB beamwidth	70...90°
H-plane 3 dB beamwidth	Omnidirectional
Electrical downtilt	None
Front to back ratio	-
Max. Continuous power	Limited by input connector
RF-connector	N- or 7/16-female
Operational windspeed	40 m/s (default)
Survival windspeed	55 m/s (default)
Wind area	0,75 m²
Dimensions (∅ x H)	4000 x 5500 mm (in use) 300 x 2500 mm (in transport)
Weight	20 kg
Mounting diameter	∅ 30...115 mm pipe with AETM160-2
Materials	-Aluminium or aluminium/carbonfiber dipoles. -Glassfiber radome/insulator -Glass reinforced polycarbonate. -Stainless steel. -Hot dip galvanised brackets.
Options	-Input connector. -Mounting method. -All aluminium or aluminium/carbonfiber models. -Aluminum mast PM6/60 (h=6 m and D=60mm) with accessories.

Aerial Oy

Box 22
04401 Järvenpää
Finland

Tel. +358 9 2790 120
Fax +358 9 2910 210

http://www.aerial.fi
aerial@aerial.fi

BROAD BAND DIPOLES D20-100-BIC, D100-500-BIC AND D500-100-BIC

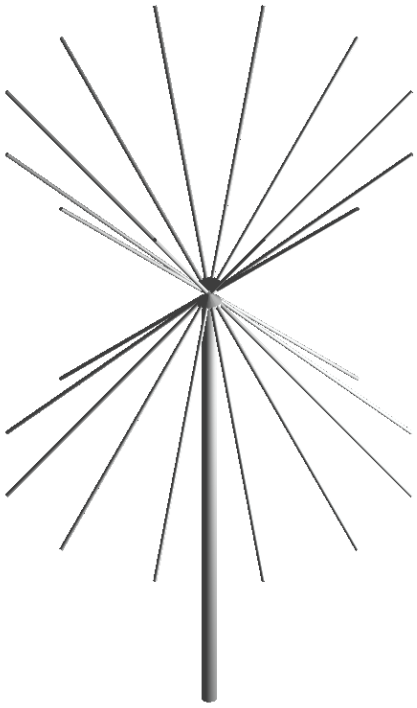

Type	D20-100-BIC	D100-500-BIC	D500-1000-BIC
Frequency	20...100 MHz	100...500 MHz	500...1000 MHz
Bandwidth	80 MHz	400 MHz	500 MHz
Impedance	50 Ω	50 Ω	50 Ω
VSWR	2,5 typical / 3,0 max	2,5 typical / 3,0 max	2,5 typical / 3,0 max
Polarisation	Vertical		
Gain	2...4 dbi		
E-plane 3 dB beamwidth	50°...80°		
H-plane 3 dB beamwidth	- °		
Electrical downtilt	None		
Front to back ratio	- dB		
Max. Continuous power	Limited by input connector		
RF-connector	N- or 7/16-female		
Operational windspeed	40 m/s (default)		
Survival windspeed	55 m/s (default)		
Wind area	1,15 m²	0,25 m²	0,05 m²
Dimensions (∅ x H)	7500x11250 mm	1500x2250 mm	300x450 mm
Weight	40 kg	8 kg	3,0 kg
Mounting diameter	∅ 30...115 mm pipe with AETM160-2		
Materials	-Detachable aluminium/carbonfiber dipoles. -Glassfiber insulator. -Aluminium support tube. -Stainless steel. -Hot dip galvanised brackets.		
Options	-Input connector. -Mounting method. -Size dipoles detached HxWxD 2800x200x200 mm	-Input connector. -Mounting method. -Size dipoles detached HXWXD 1400x100x100 mm	-Input connector. -Mounting method. -Size dipoles detached HxWxD 350x100x100 mm

Aerial Oy
Box 22
04401 Järvenpää
Finland
Tel. +358 9 2790 120
Fax +358 9 2910 210
http://www.aerial.fi
aerial@aerial.fi

BROAD BAND DIPOLE D1000-3000-BIC

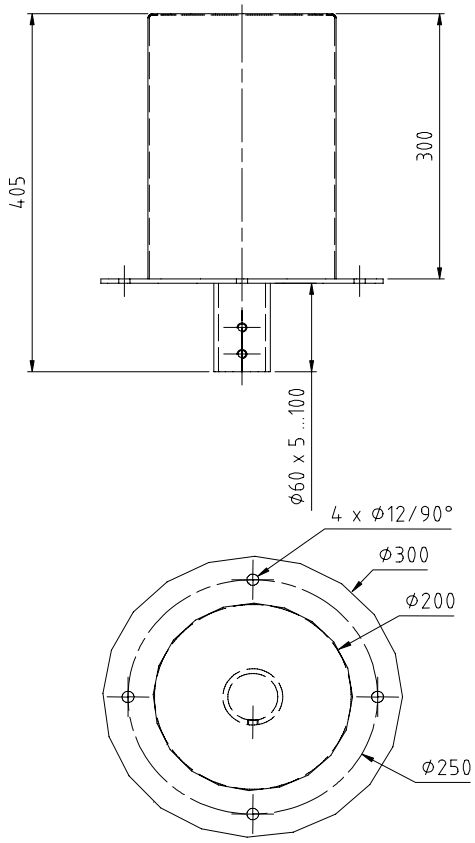

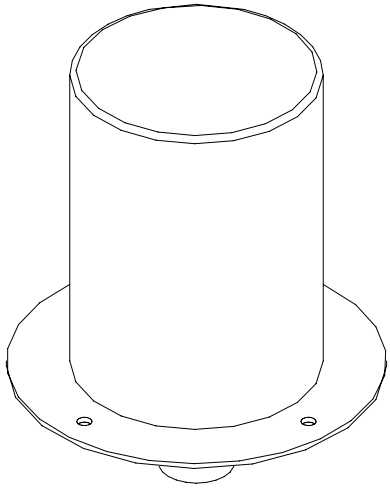

Type	D1000-3000-BIC
Frequency	1000 MHz...3000 MHz
Bandwidth	2000 MHz
Impedance	50 Ω
VSWR	2,5 typical / 3,0 max
Polarisation	Vertical
Gain	2...3 dbi
E-plane 3 dB beamwidth	50°...80°
H-plane 3 dB beamwidth	- °
Electrical downtilt	None
Front to back ratio	- dB
Max. Continuous power	Limited by input connector
RF-connector	N or 7/16 female
Operational windspeed	40 m/s (default)
Survival windspeed	55 m/s (default)
Wind area	0,06 m²
Dimensions (∅ x H)	300/200x405 mm
Weight	2,5 kg
Mounting diameter	∅ 30...115 mm pipe with AETM160-2 or to a top of a 50 mm tube.
Materials	-Detachable aluminium/carbonfiber dipoles. -Glassfiber radome. -Aluminium radiator. -Hot dip galvanised brackets.
Options	-Input connector. -Mounting method.

Aerial Oy
Box 22
04401 Järvenpää
Finland
Tel. +358 9 2790 120
Fax +358 9 2910 210
http://www.aerial.fi
aerial@aerial.fi

NDB-ANTENNA AV1110-24

Type	AV1110-24
Frequency	0,2…2,0 MHz
Bandwidth	1,8 MHz
Impedance	Low resistance in series with capacitance.
Polarisation	Vertical
Gain	Depending on frequency.
E-plane 3 dB beamwidth	Depending on frequency.
H-plane 3 dB beamwidth	360°
Electrical downtilt	-
Front to back ratio	-
Max. Continuous power	10 kW
RF-connector	N or 7/16 female
Operational windspeed	40 m/s (default)
Survival windspeed	55 m/s (default)
Wind area	Wind analysis and details can be provided separately.
Dimensions (H x W x D) (∅ x H)	24 x 420 x 420 mm
Weight	XX kg
Mounting diameter	∅ 30…115 mm pipe
Materials	Hot dip galvanised steel Glassfiber radome
Options	Different frequency ranges, power rating and windspeed specifications. Top coil Ground net Transformer for 50 Ω Please ask an offer with your specifications.

Aerial Oy
Box 22
04401 Järvenpää
Finland
Tel. +358 9 2790 120
Fax +358 9 2910 210
http://www.aerial.fi
aerial@aerial.fi

WIDE BAND HORN ANTENNAS

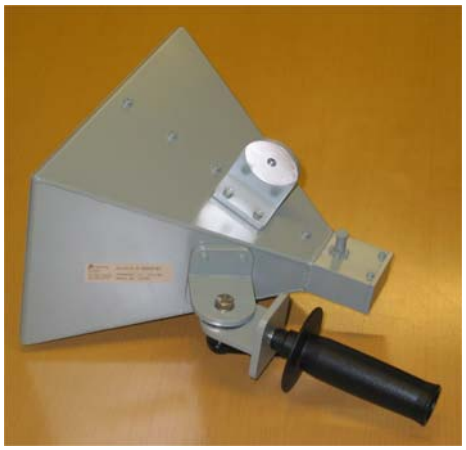

Aerial Oy wide band horn antennas are especially designed for EMC-measurements, wide band spectrum studies and electromagnetic/RF interference measurements.

The products listed here represent only a part of the available models. We have several different types covering standard waveguide band, horns with double ridge waveguide feed and also with the double ridge extending all the way to the aperture.

Please contact Aerial Oy sales to receive more information on this product group and as always with our products all details can be modified to meet the needs of the customer.

Aerial Oy

Box 22
04401 Järvenpää
Finland

Tel. +358 9 2790 120
Fax +358 9 2910 210

http://www.aerial.fi
aerial@aerial.fi

Type	AU10/1-10	AU20/2-4	AU20/4-8
Frequency	1...10 GHz	2...4 GHz	4...8 GHz
Bandwidth	9 GHz	2 GHz	4 GHz
Impedance	50 Ω	50 Ω	50 Ω
VSWR	3 typical	3 typical	3 typical
Polarisation	Vertical or horisontal	Vertical or horisontal	Vertical or horisontal
Gain	10 dBi 1)	20 dBi 1)	20 dBi 1)
E-plane 3 dB beamwidth	60° 1)	20° 1)	20° 1)
H-plane 3 dB beamwidth	60° 1)	20° 1)	20° 1)
Electrical downtilt	None	None	None
Front to back ratio	20 dB	20 dB	20 dB
Max. Continuous power	2)	2)	2)
RF-connector	N female or SMA-female	N female or SMA-female	N female or SMA-female
Operational windspeed	40 m/s (default)	40 m/s (default)	40 m/s (default)
Survival windspeed	55 m/s (default)	55 m/s (default)	55 m/s (default)
Wind area	0,06 m²	0,24 m²	0,09 m²
Dimensions (H x W x D)	175x235x450 mm	340x460x600 mm	200x300x500 mm
Weight	4 kg	5 kg	4 kg
Mounting diameter	3)	3)	3)
Materials	Aluminium Glassfiber radome	Aluminium Glassfiber radome	Aluminium Glassfiber radome
Options	Colour	Colour	Colour

Type	AU20/8-18	AU12/2-18	AU10/0,45-2,2
Frequency	8...18 GHz	2...18GHz	0,45...2,2 GHz
Bandwidth	10 GHz	16 GHz	1,75 GHz
Impedance	50 Ω	50 Ω	50 Ω
VSWR	3 typical	3 typical	3 typical
Polarisation	Vertical or horisontal	Vertical or horisontal	Vertical or horisontal
Gain	20 dBi 1)	12 dBi 1)	10 dBi 1)
E-plane 3 dB beamwidth	20° 1)	45° 1)	60° 1)
H-plane 3 dB beamwidth	20° 1)	45° 1)	60° 1)
Electrical downtilt	None	None	None
Front to back ratio	20 dB	20 dB	20 dB
Max. Continuous power	2)	2)	2)
RF-connector	N female or SMA-female	N female or SMA-female	N female or SMA-female
Operational windspeed	40 m/s (default)	40 m/s (default)	40 m/s (default)
Survival windspeed	55 m/s (default)	55 m/s (default)	55 m/s (default)
Wind area	0,01 m²	0,05 m²	0,27 m²
Dimensions (H x W x D, ∅)	70x88x240 mm	140x200x350 mm	360x500x550 mm
Weight	1 kg	4 kg	6 kg
Mounting diameter	3)	3)	3)
Materials	Aluminium Glassfiber radome	Aluminium Glassfiber radome	Aluminium Glassfiber radome
Options	Colour	Colour	Colour

Aerial Oy
Box 22
04401 Järvenpää
Finland
Tel. +358 9 2790 120
Fax +358 9 2910 210
http://www.aerial.fi
aerial@aerial.fi

Type	AU15/2-4
Frequency	2...4 GHz
Bandwidth	2 GHz
Impedance	50 Ω
VSWR	3 typical
Polarisation	Vertical or horisontal
Gain	15 dBi 1)
E-plane 3 dB beamwidth	30° 1)
H-plane 3 dB beamwidth	30° 1)
Electrical downtilt	None
Front to back ratio	20 dB
Max. Continuous power	2)
RF-connector	N female or SMA-female
Operational windspeed	40 m/s (default)
Survival windspeed	55 m/s (default)
Wind area	0,14 m²
Dimensions (H x W x D, ∅)	280x320x500 mm
Weight	4 kg
Mounting diameter	3)
Materials	Aluminium Glassfiber radome
Options	Colour

1) Antenna gain and radiation pattern widths values stated are at midband. All values stated are nominal values and more information is available on request.
2) Maximum continuous power is limited by the connector.
3) Mounting method is always customer specified. Standard methods are: A: mounting from the back of the horn to a mounting tube with diameter between 30...115 mm. B: a handle which is attached to the center of gravity. C: mounting from the center of gravity to a tripod.

Aerial Oy
Box 22
04401 Järvenpää
Finland
Tel. +358 9 2790 120
Fax +358 9 2910 210
http://www.aerial.fi
aerial@aerial.fi

WAVEGUIDE COMPONENTS R100 (WR90)

Aerial Oy stocks various standard high precision waveguides and waveguide flanges in aluminium, brass and copper. The wavequides can be bent or twisted according to customer specifications. Normally after machining the wavequides are silver plated (Copper and copper) or chromated (aluminium) and painted. All the wavequide components are tested after manufacturing.

Please ask for a quote with your specifications.

Above is a special aluminium waveguide with one H-plane and one E-plane bend and a 90 degree twist. The flanges are PBR-type.

Type	**WAVEGUIDE COMPONENTS R100 (WR90)**
Frequency	8,20...12,4 GHz
Bandwidth	4,2 GHz
Impedance	50 Ω
VSWR	1,15 Typical, 1,2 typical for adapters.
Attenuation (Theoretical)	18,2...12,6 dB/100 m Aluminium 21,1...14,6 dB/100 m Brass 14,0...9,7 dB/100 m Copper
Max. Continuous power (Theoretical)	0,96...1,39 kW Aluminium 0,862....1,25 kW Brass 1,22...1,77 kW Copper
Flanges/connectors	UBR, UDR, PDR and PBR in stock N, SMA, 7/16 available for adapters
Coating	Silver, Tin or/and paint
Dimensions (H x W)	22,86 x 10,16 mm internal 25,40 x 12,70 mm external
Weight	0,25 kg/m Aluminium 0,76 kg/m Brass 0,81 kg/m Copper
Tolerances in length	L<500mm ±1 mm 500<L<1000 mm ±1,5 mm L>1000mm ±2 mm
Waveguide type	R100 (equals WR90)
Materials	Aluminium or copper
Options	Low VSWR versions. Bends and twits available. Optimised narrowband versions.

Aerial Oy
Box 22
04401 Järvenpää
Finland
Tel. +358 9 2790 120
Fax +358 9 2910 210
http://www.aerial.fi
aerial@aerial.fi

WAVEGUIDE COMPONENTS R120 (WR75)

Aerial Oy stocks various standard high precision waveguides and waveguide flanges in aluminium, brass and copper. The wavequides can be bent or twisted according to customer specifications. Normally after machining the wavequides are silver plated (Copper and brass) or chromated (aluminium) and painted. All the wavequide components are tested after manufacturing.

Please ask for a quote with your specifications.

Above is a special aluminium waveguide with one H-plane and one E-plane bend and a 90 degree twist. The flanges are PBR-type.

Type	**WAVEGUIDE COMPONENTS R120 (WR75)**
Frequency	9,84...15,0 GHz
Bandwidth	5,16 GHz
Impedance	50 Ω
VSWR	1,15 Typical, 1,2 typical for adapters.
Attenuation	21,5...15,1 dB/100 m Aluminium 24,9...17,4 db/100 m Brass 16,5...11,6 dB/100 m Copper
Max. Continuous power	0,737...1,06 kW Aluminium 0,662...0,948 kW Brass 0,94...1,36 kW Copper
Flanges/connectors	UBR, UDR, PDR and PBR in stock N, SMA, 7/16 available for adapters
Coating	Silver, Tin or/and paint
Dimensions (H x W)	19,05 x 9,525 mm internal 21,59 x 12,06 mm external
Weight	0,22 kg/m Aluminium 0,67 kg/m Brass 0,71 kg/m Copper
Tolerances in length	L<500mm ±1 mm 500<L<1000 mm ±1,5 mm L>1000mm ±2 mm
Waveguide type	R120 (equals WR75)
Materials	Aluminium or copper
Options	Low VSWR versions. Bends and twits available. Optimised narrowband versions.

Aerial Oy
Box 22
04401 Järvenpää
Finland
Tel. +358 9 2790 120
Fax +358 9 2910 210
http://www.aerial.fi
aerial@aerial.fi

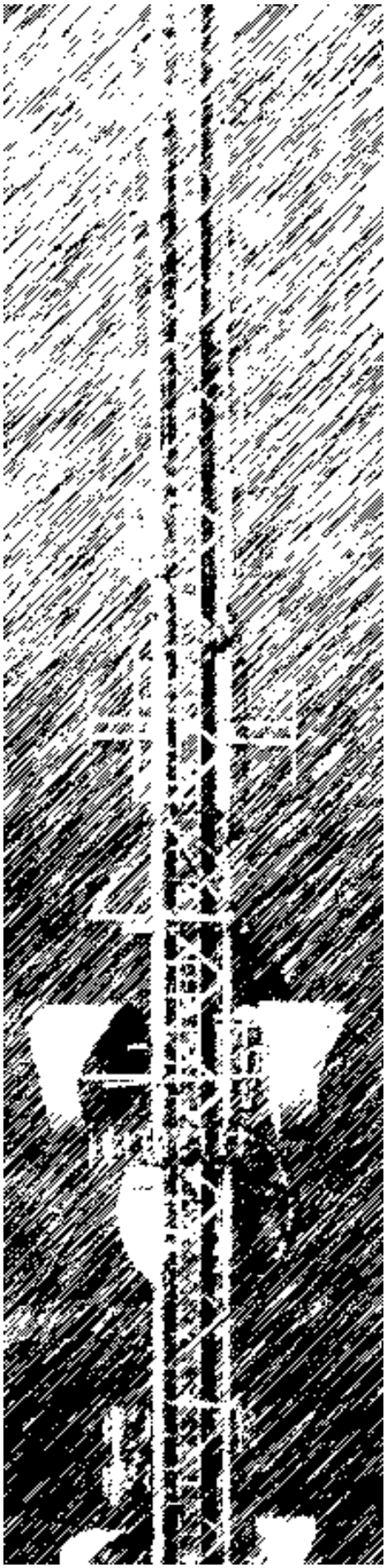

Antennas

Masts

Components

Design

Measurement

Testing

Installation

Aerial Oy

Box 22
04401 Järvenpää
Finland

Tel. +358 9 2790 120
Fax +358 9 2910 210

http://www.aerial.fi
aerial@aerial.fi

Mast product line

Aerial Oy offers a comprehensive mast product mix of masts themselves, installations, related accessories and services allied with customer criteria oriented computerised mast analysis. Yet further, to take full advantage of all this, you can acquire antennas as well as connectors and cables together with masts and installation work from Aerial Oy. In this manner everything outside your radio equipment shelter comes from one and reliable partner.

Masts and other steel elements are produced by Aerial's subsidiary Parelco Oy at Kesälahti.

Green field sites

Aerial Green field site mast options can be subdivided into to two categories: *guyed* and *self supporting* masts.

Mast solutions delivered by Aerial Oy are more and more often tailored at least at some level according to customer's requirements. The usual procedure is that customer describes Aerial mast sales his mast needs including information about required height and loading, building site, local environmental characteristics, possible future needs and so forth... Then mast department and customer together decide the most suitable mast model and if needed the mast analysis and calculation is accomplished.

Accordingly, the following information and data sheets are primarily ment to give a feel and understanding of the mast product line of Aerial Oy.

Guyed masts

Aerial's guyed lattice masts are the most economic solution for most construction sites. Material and installation costs are usually lower compared to self supporting towers and constant mast face width is easier to work with when installing and directing antennas. Weight and effective wind area are smaller in guyed masts. Also the available height range is wider.

Guyed mast constructs of comparatively narrow lattice element body and guy wires. Wire ropes are drawn tight to a predetermined tension value between standard guy element and anchor or torsion resistor and anchor. Torsion resistors are used with high loadings, in difficult environmental conditions and whenever extra performance and stability is required.

Aerial offers guyed masts with 400 mm, 440 mm, 500 mm, 700 mm, 800 mm and 1300 mm element widths. Light 400 series might be used for example in telecontrol applications. 500 and 700 series fulfils in most cases the requirements of modern cellular networks as 800 and 1300 series is available for heavy and extra heavy category use.

Aerial masts are always hot dip galvanized and painted in obstruction colours (alternating red and white) as needed.

Aerial guyed masts are named after following practise:

Mxxxx-yy-zzz

x - Element width in millimeters
y - Leg diameter in millimeters
z - Mast height in meters

M400-20

General

Typical capacity: 5 m²
Height: up to 42 m

Design standards

Finnish "Masto-ohje 1980" and international standards BS, DIN and EIA

Mast data

Mast width: 400 mm
Cross-section: Triangular
Legs: Solid round steel Fe52D
Diagonals/horizontal bars: Fe37
Construction: Welded
Bolts: Hexagon DIN 931 M24, strength class 8.8
Nuts: Hexagon DIN 934
Washers: Plain DIN 7989

Guy wires

52 mm² and 87 mm² (typical), 107 mm² or even thicker in icing conditions

Surface finishing

Hot dip galvanizing according to international SFS-EN ISO 1461A standard. Minimum zinc layer thickness is 100 µm. Obstruction painting comes as an option.

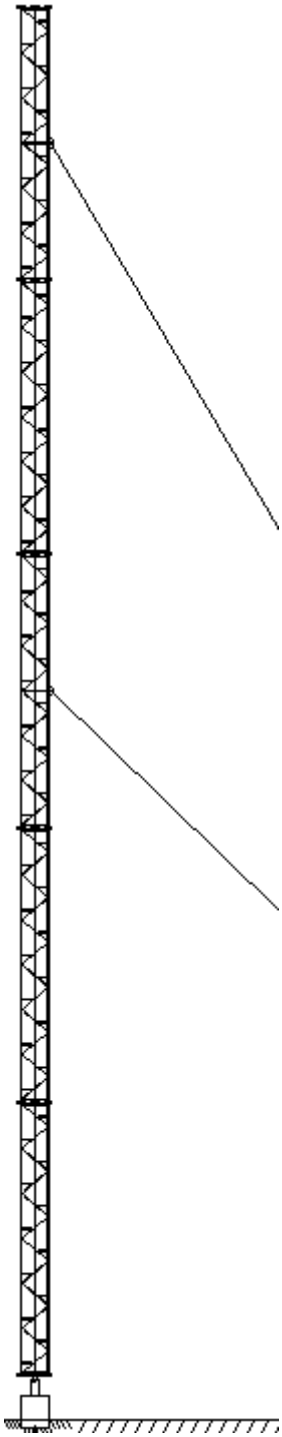

400/20-10 m

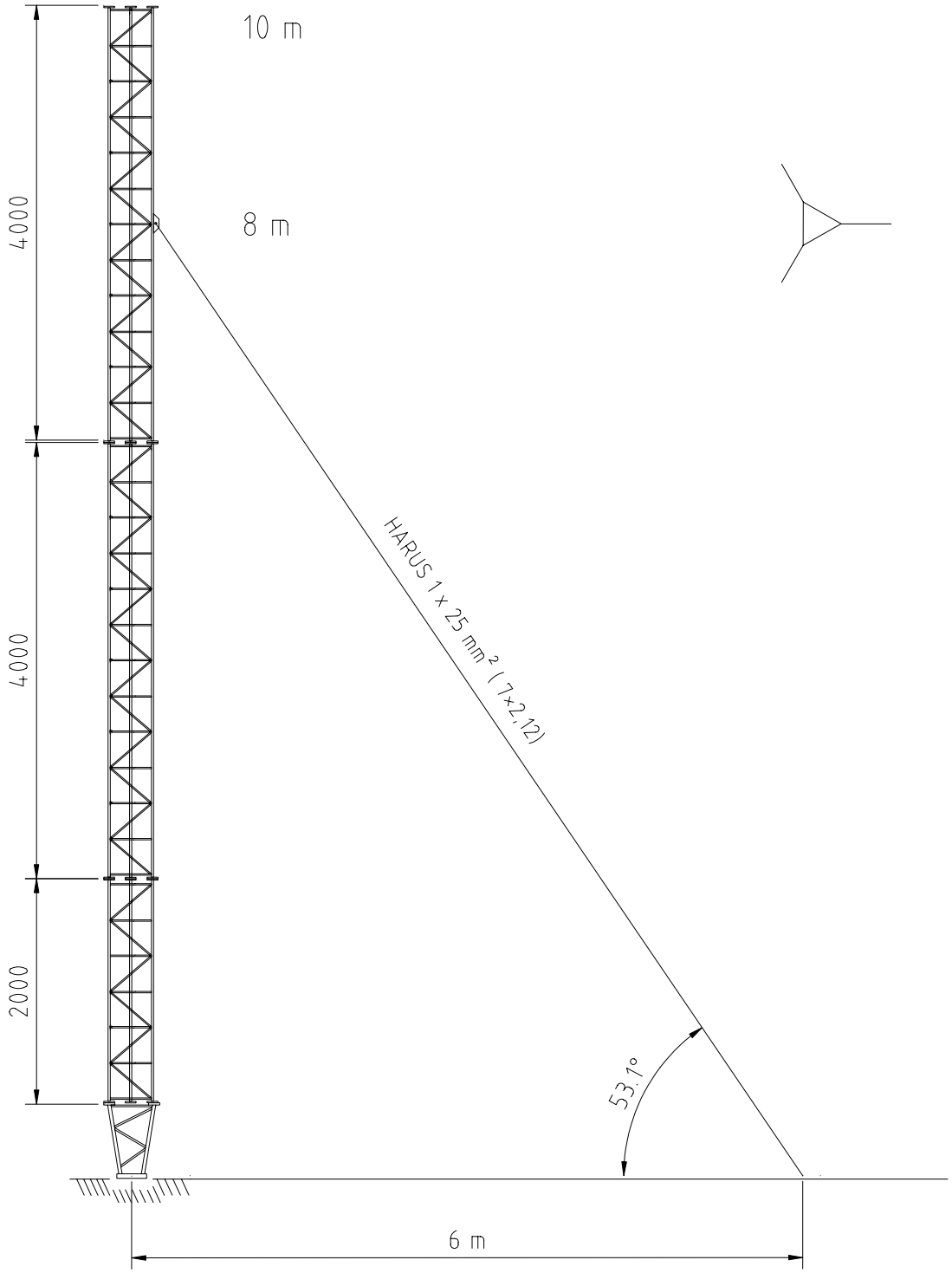

Aerial Oy
Box 22
04401 Järvenpää
Finland
Tel. +358 9 2790 120
Fax +358 9 2910 210
http://www.aerial.fi
aerial@aerial.fi

400/20-21 m

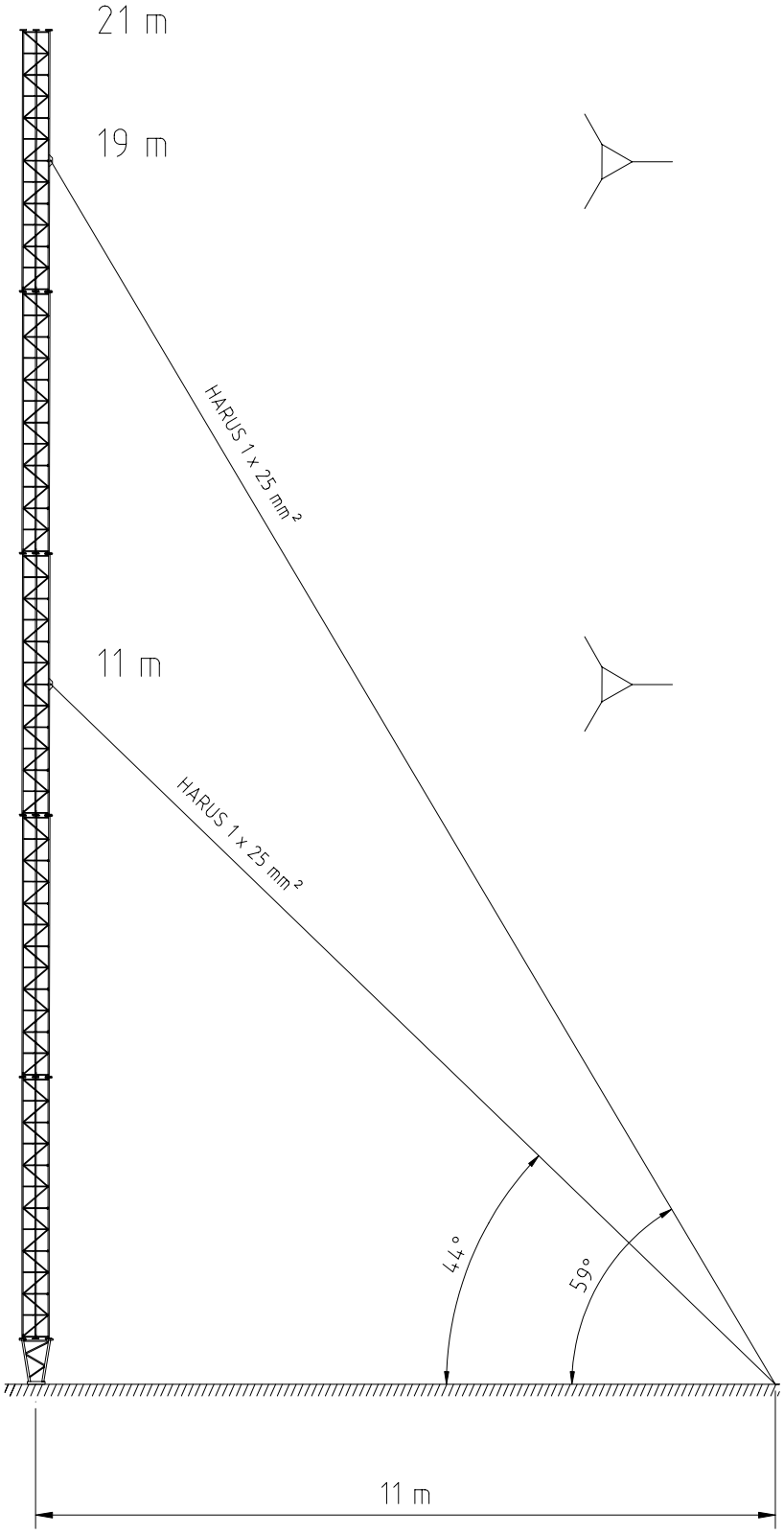

Aerial Oy
Box 22
04401 Järvenpää
Finland
Tel. +358 9 2790 120
Fax +358 9 2910 210
http://www.aerial.fi
aerial@aerial.fi

400/20-31

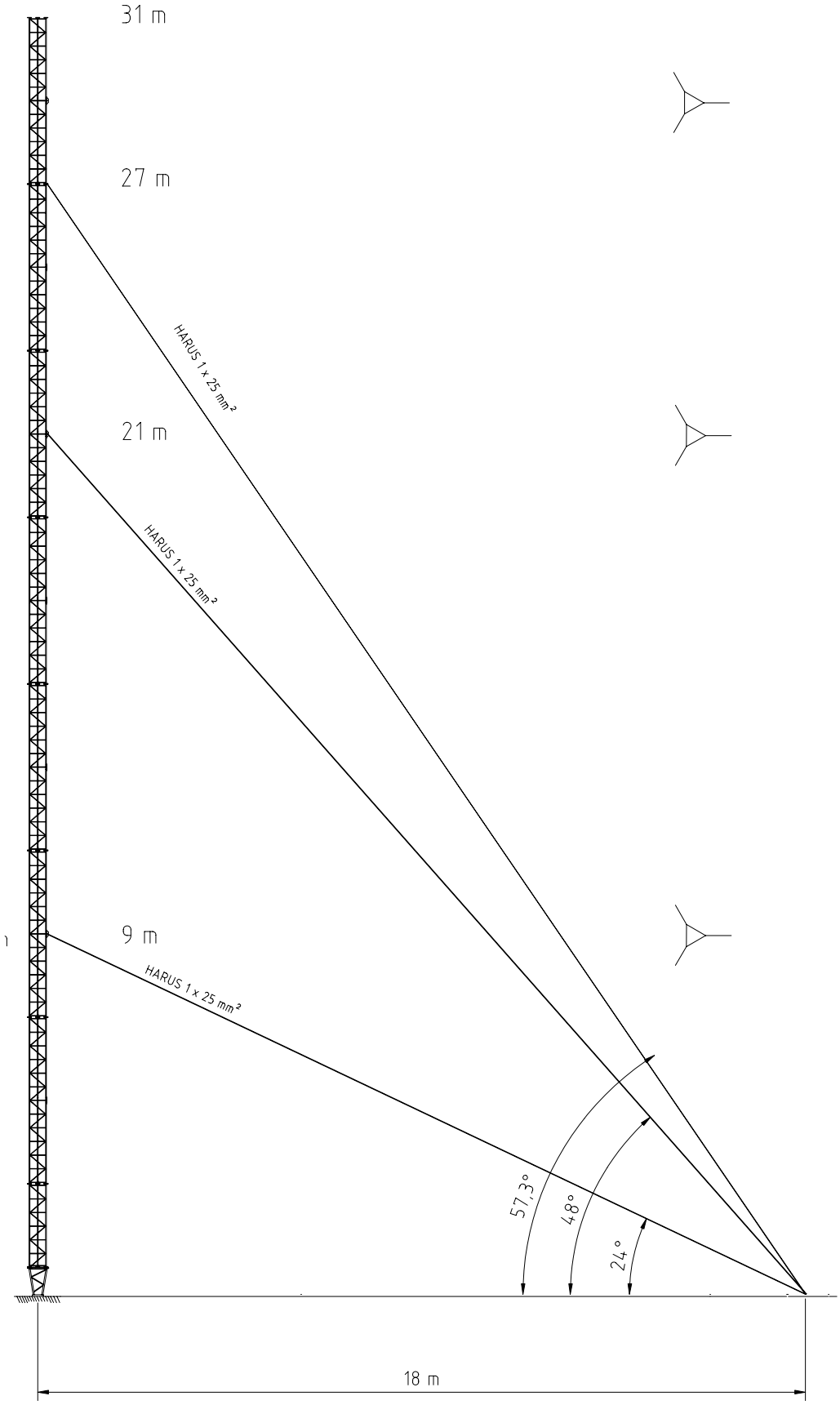

Aerial Oy
Box 22
04401 Järvenpää
Finland
Tel. +358 9 2790 120
Fax +358 9 2910 210
http://www.aerial.fi
aerial@aerial.fi

400/20-41

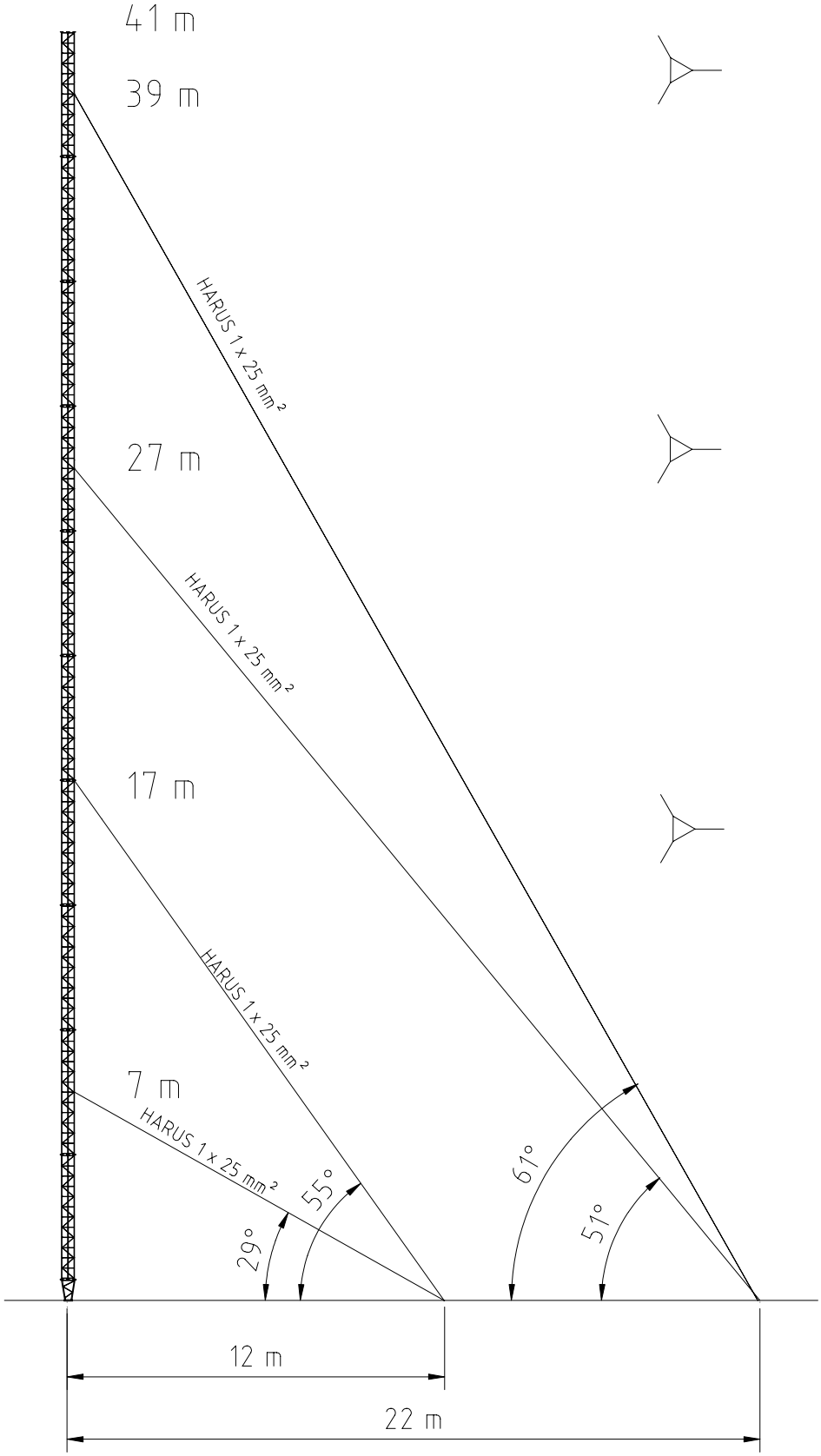

Aerial Oy
Box 22
04401 Järvenpää
Finland
Tel. +358 9 2790 120
Fax +358 9 2910 210
http://www.aerial.fi
aerial@aerial.fi

400/20 element

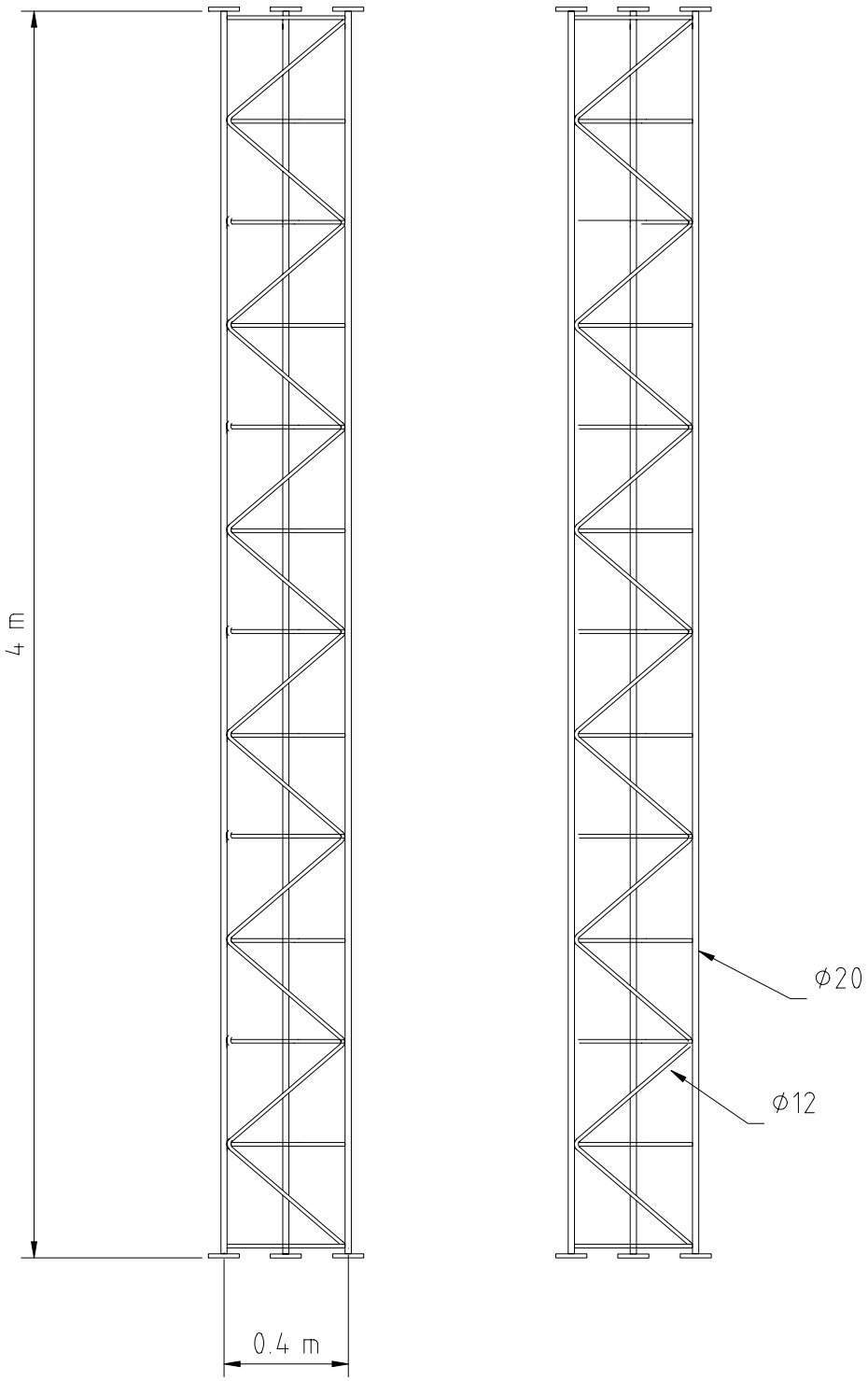

Aerial Oy
Box 22
04401 Järvenpää
Finland
Tel. +358 9 2790 120
Fax +358 9 2910 210
http://www.aerial.fi
aerial@aerial.fi

M440-55

General

Typical capacity: 5 m²
Height: up to 40 m

Design standards

Finnish "Masto-ohje 1980" and international standards BS, DIN and EIA

Mast data

Mast width: 440 mm
Mast weight: 7 kg/m
Cross-section: Triangular
Material: Aluminium AlSi1Mg T6
Legs: 60º L-profile
Diagonals: L-profile
Construction: Bolted
Bolts: Hexagon DIN 7990 M12, strength class 8.8
Nuts: Hexagon DIN 934
Washers: Plain DIN 7989

Guy wires

52 mm² and 87 mm² (typical), 107 mm² or even thicker in icing conditions

Surface finishing

Painting if necessary and obstruction painting comes as an option.

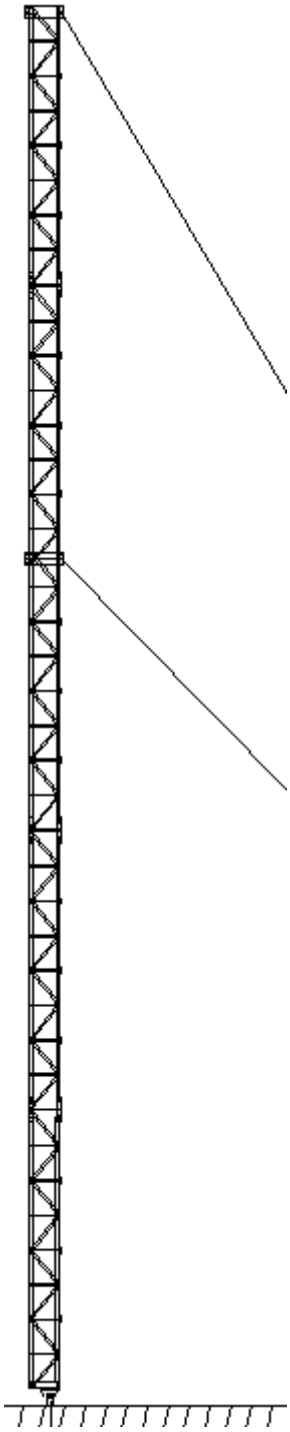

Aluminium mast 440/55-10

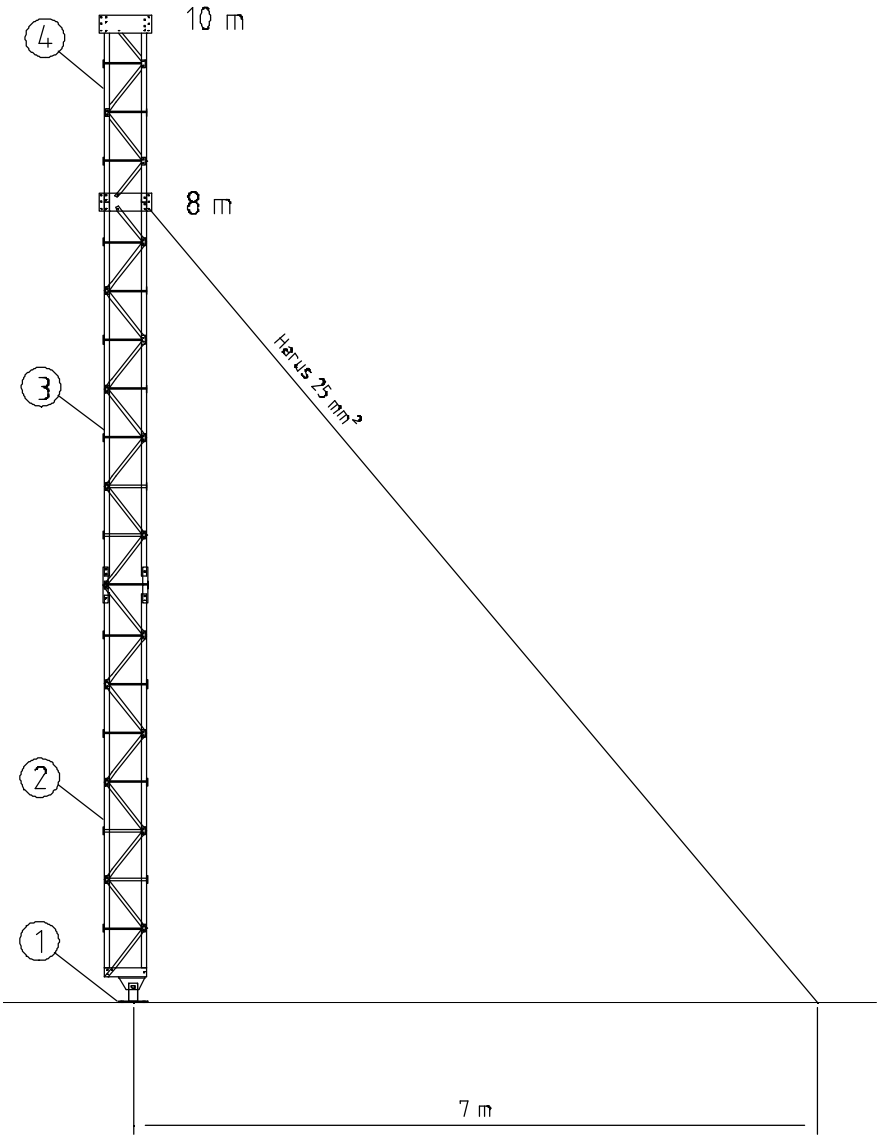

Max wind area	3 m2
Operational wind	15 m/s
Survival wind	45 m/s
Application	BTS

Aerial Oy
Box 22
04401 Järvenpää
Finland
Tel. +358 9 2790 120
Fax +358 9 2910 210
http://www.aerial.fi
aerial@aerial.fi

Aluminium mast 440/55-20

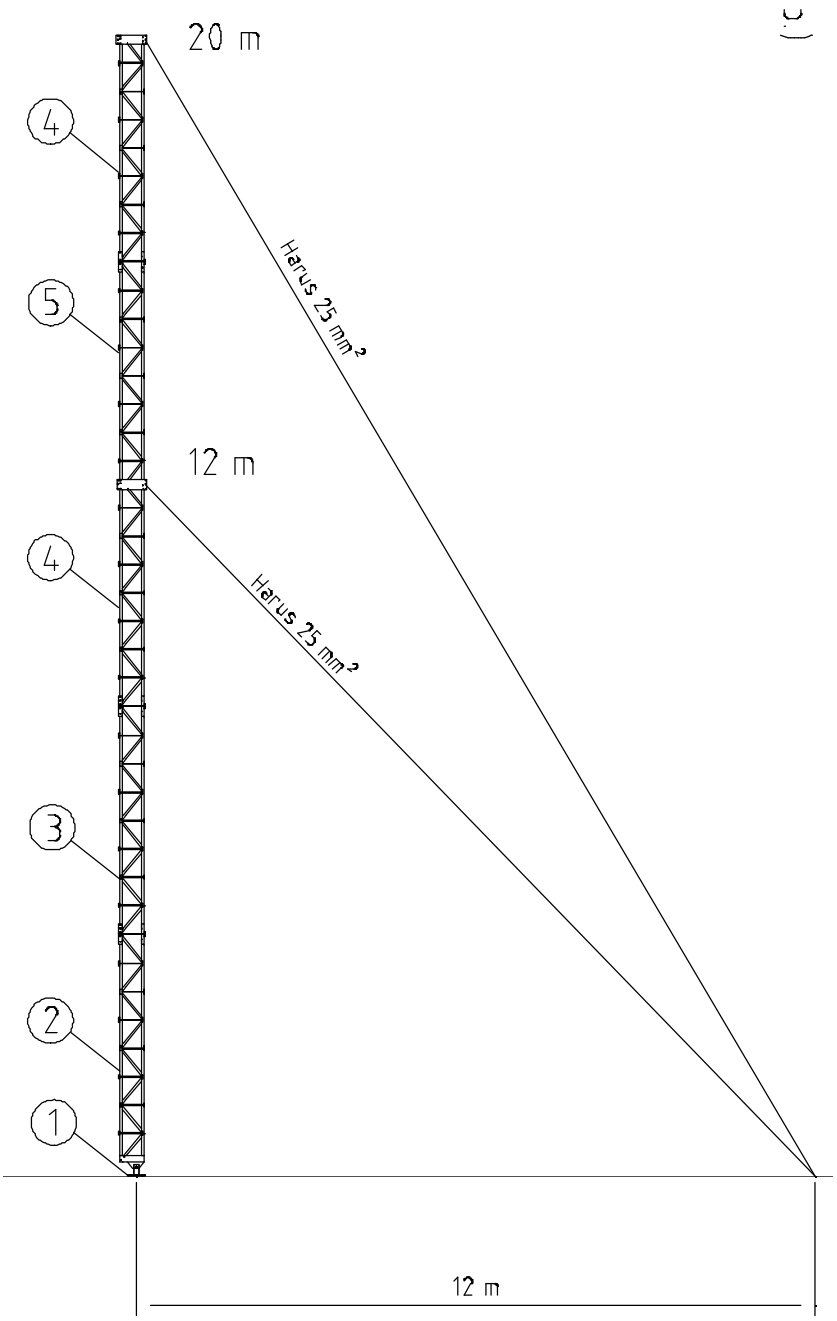

Max wind area	3 m2
Operational wind	15 m/s
Survival wind	45 m/s
Application	BTS

Aerial Oy
Box 22
04401 Järvenpää
Finland
Tel. +358 9 2790 120
Fax +358 9 2910 210
http://www.aerial.fi
aerial@aerial.fi

Aluminium mast 440/55-30

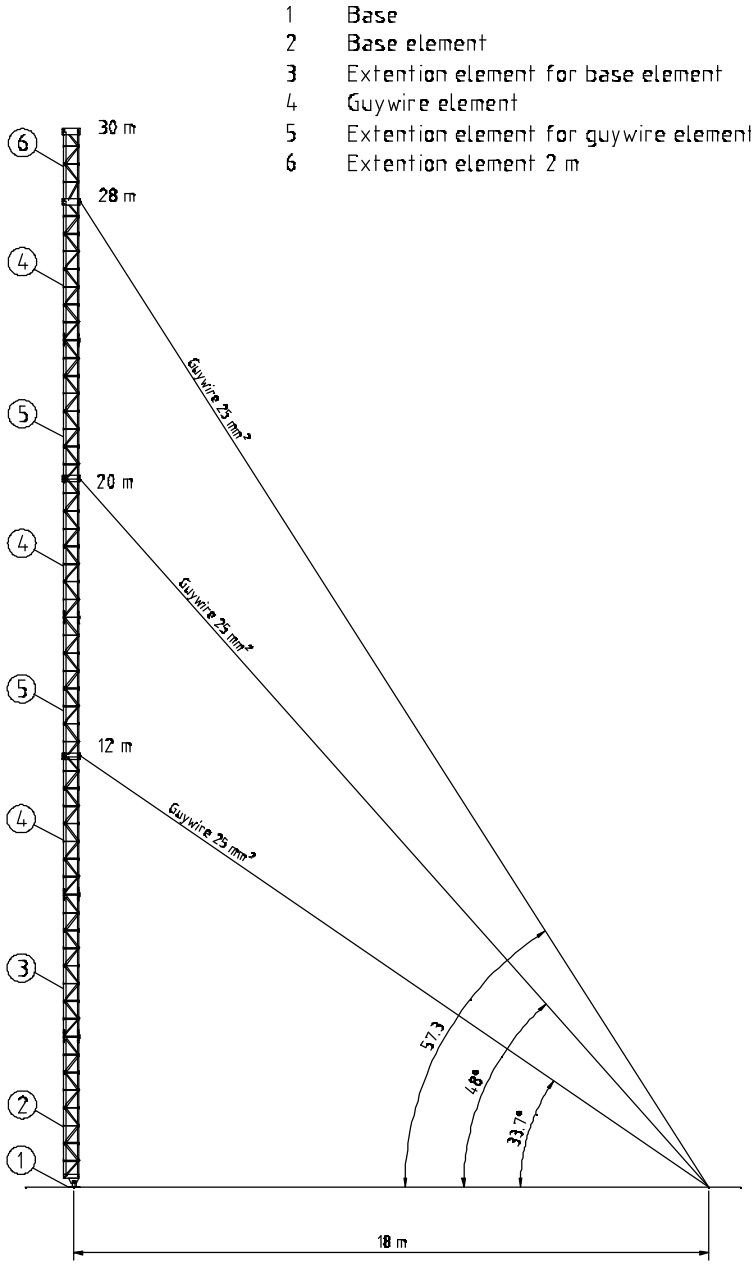

Max wind area	3 m2
Operational wind	15 m/s
Survival wind	45 m/s
Application	BTS

Aerial Oy
Box 22
04401 Järvenpää
Finland
Tel. +358 9 2790 120
Fax +358 9 2910 210
http://www.aerial.fi
aerial@aerial.fi

Alumiinimasto 440/55-40

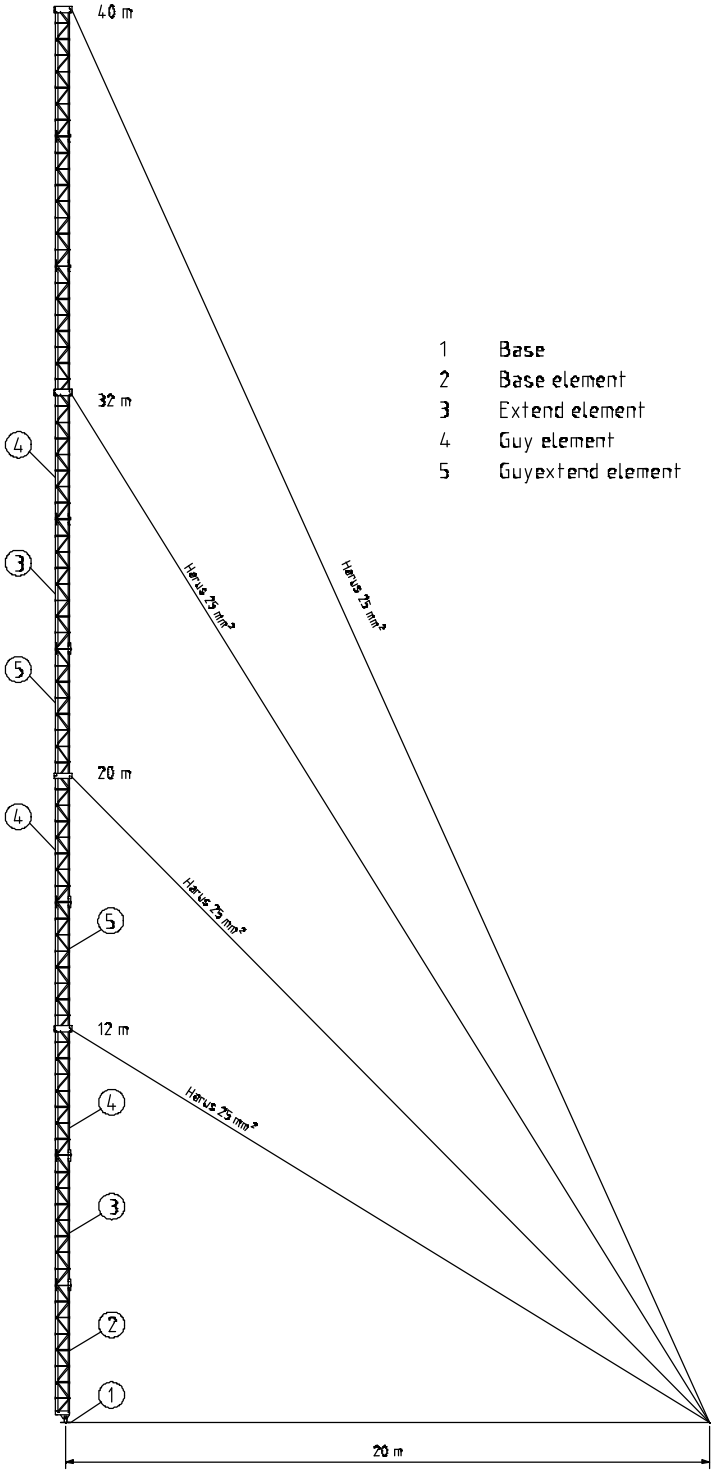

Max wind area	3 m2
Operational wind	15 m/s
Survival wind	45 m/s
Application	BTS

Aerial Oy
Box 22
04401 Järvenpää
Finland
Tel. +358 9 2790 120
Fax +358 9 2910 210
http://www.aerial.fi
aerial@aerial.fi

Aluminium mast 440/55

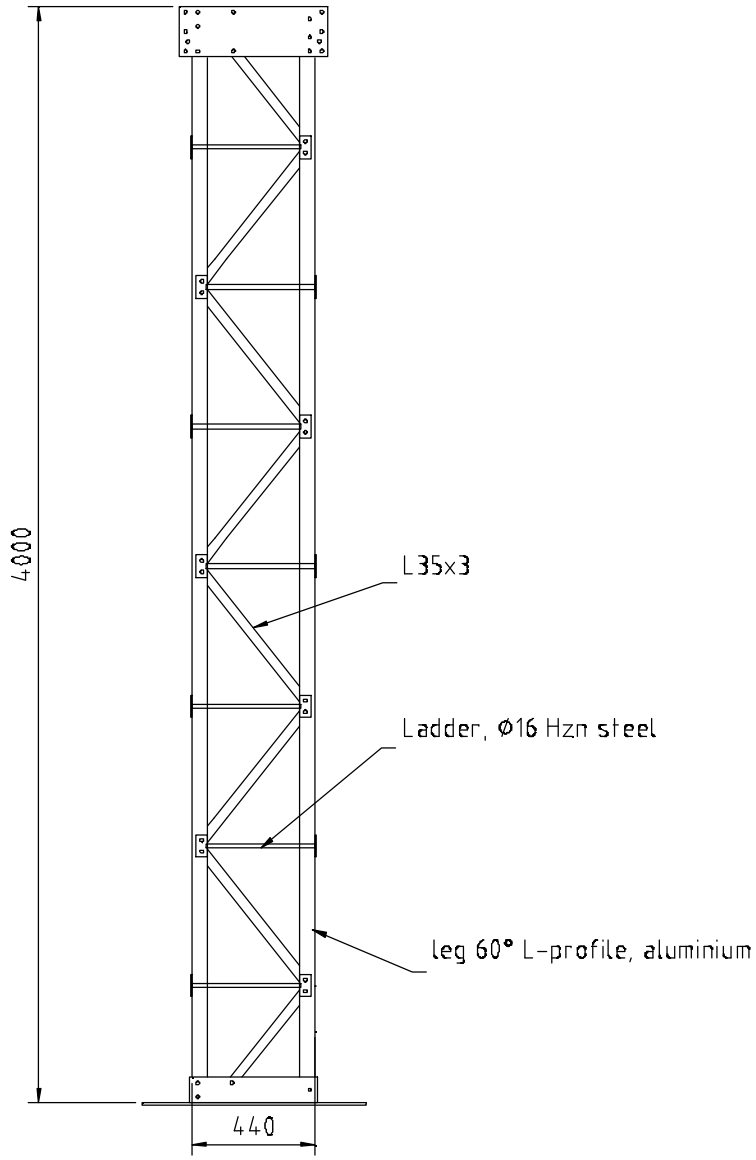

Max wind area	3 m2
Operational wind	15 m/s
Survival wind	45 m/s
Application	BTS
Weight	7 kg/m

Aerial Oy
Box 22
04401 Järvenpää
Finland
Tel. +358 9 2790 120
Fax +358 9 2910 210
http://www.aerial.fi
aerial@aerial.fi

M500-30

General

Typical capacity: 17 m²
Height: up to 79 m

Design standards

Finnish "Masto-ohje 1980" and international standards BS, DIN and EIA

Mast data

Mast width: 500 mm
Cross-section: Triangular
Legs: Solid round steel Fe52D
Diagonals/horizontal bars Fe37
Construction: Welded
Bolts: Hexagon DIN 931 M24, strength class 8.8
Nuts: Hexagon DIN 934
Washers: Plain DIN 7989

Guy wires

52 mm² and 87 mm² (typical), 107 mm² or even thicker in icing conditions

Surface finishing

Hot dip galvanizing according to international SFS-EN ISO 1461A standard. Minimum zinc layer thickness is 100 µm. Obstruction painting comes as an option.

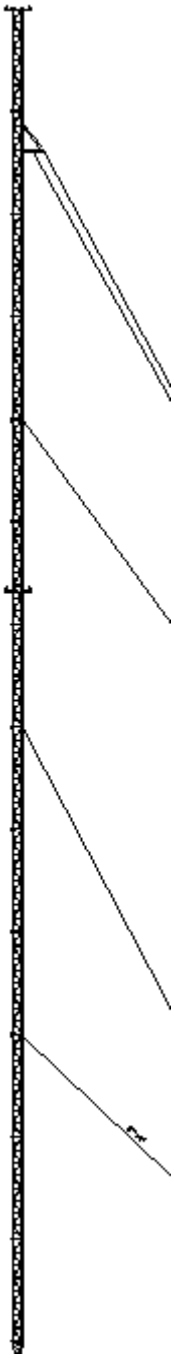

500/30-49

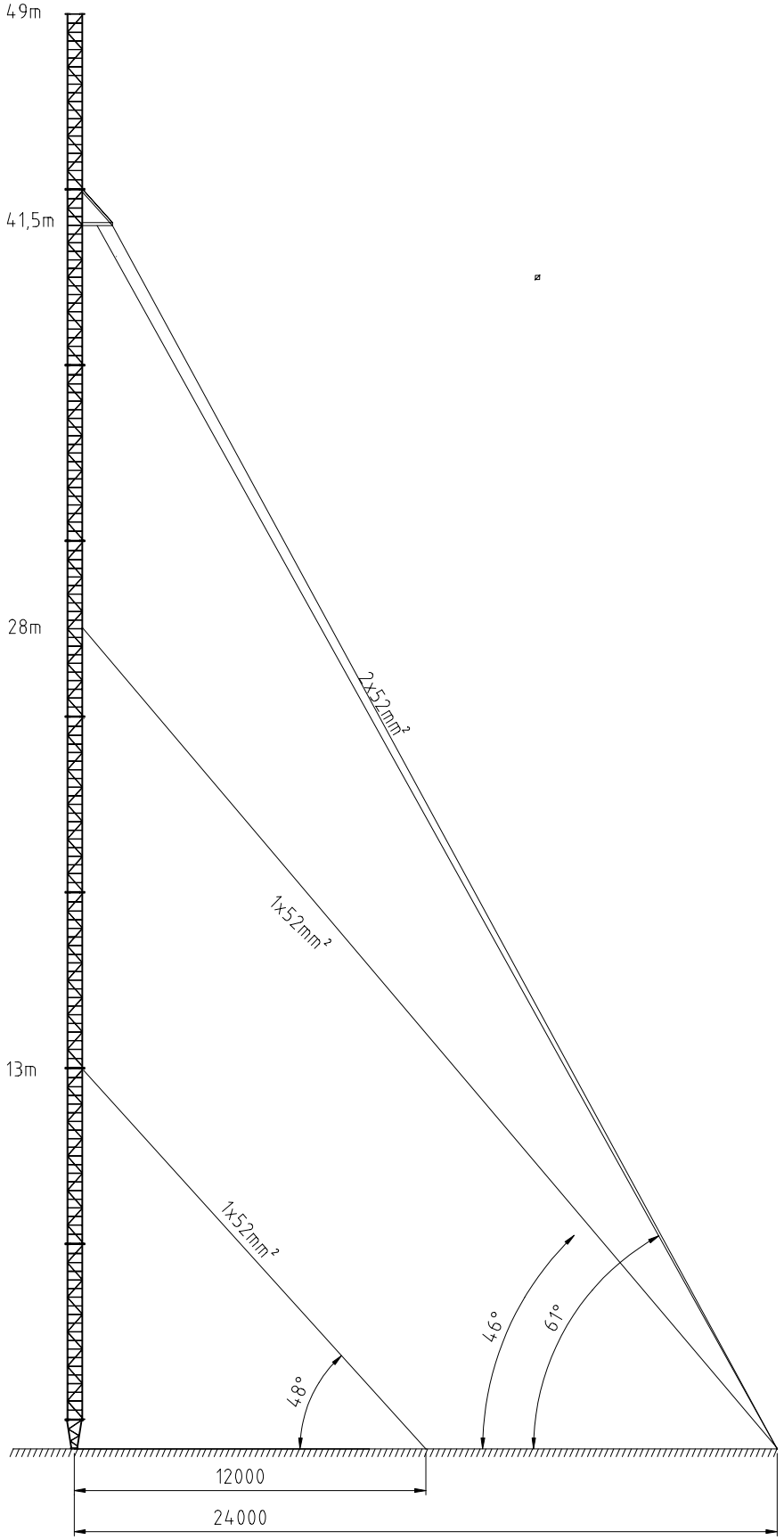

Aerial Oy
Box 22
04401 Järvenpää
Finland
Tel. +358 9 2790 120
Fax +358 9 2910 210
http://www.aerial.fi
aerial@aerial.fi

500-30-61

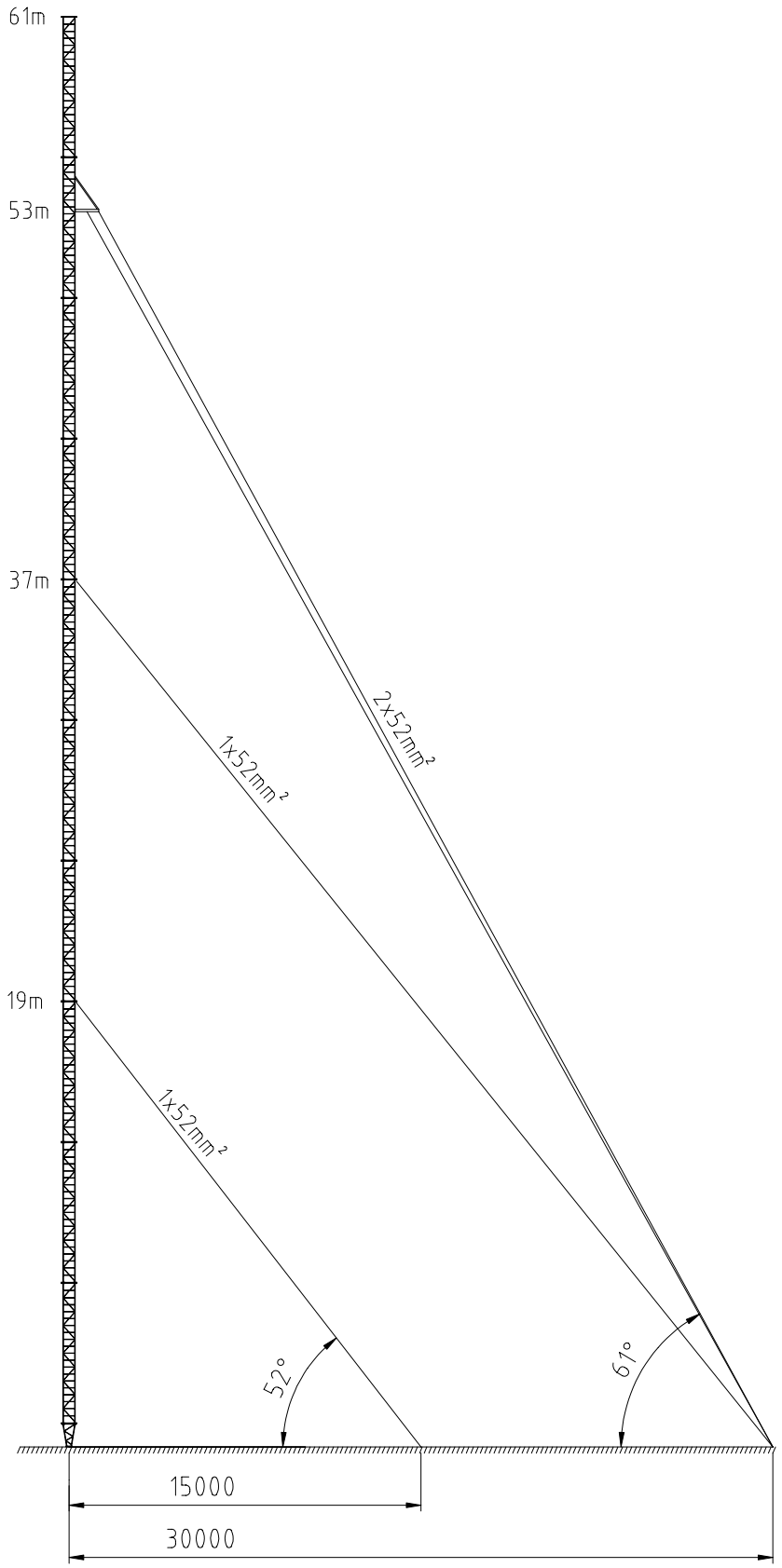

Aerial Oy
Box 22
04401 Järvenpää
Finland
Tel. +358 9 2790 120
Fax +358 9 2910 210
http://www.aerial.fi
aerial@aerial.fi

500/30-69,4

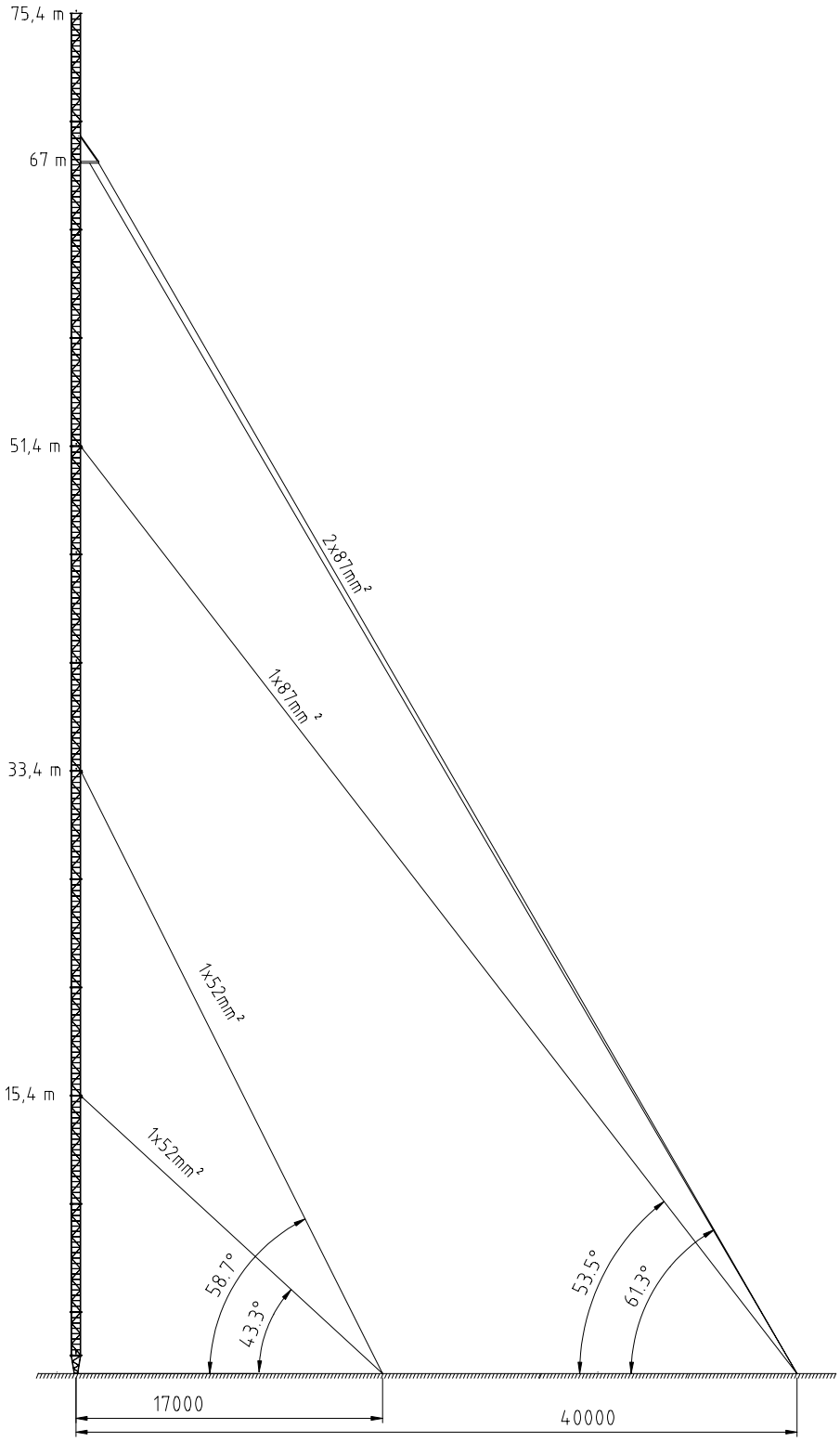

Aerial Oy
Box 22
04401 Järvenpää
Finland
Tel. +358 9 2790 120
Fax +358 9 2910 210
http://www.aerial.fi
aerial@aerial.fi

Mast element 500/30

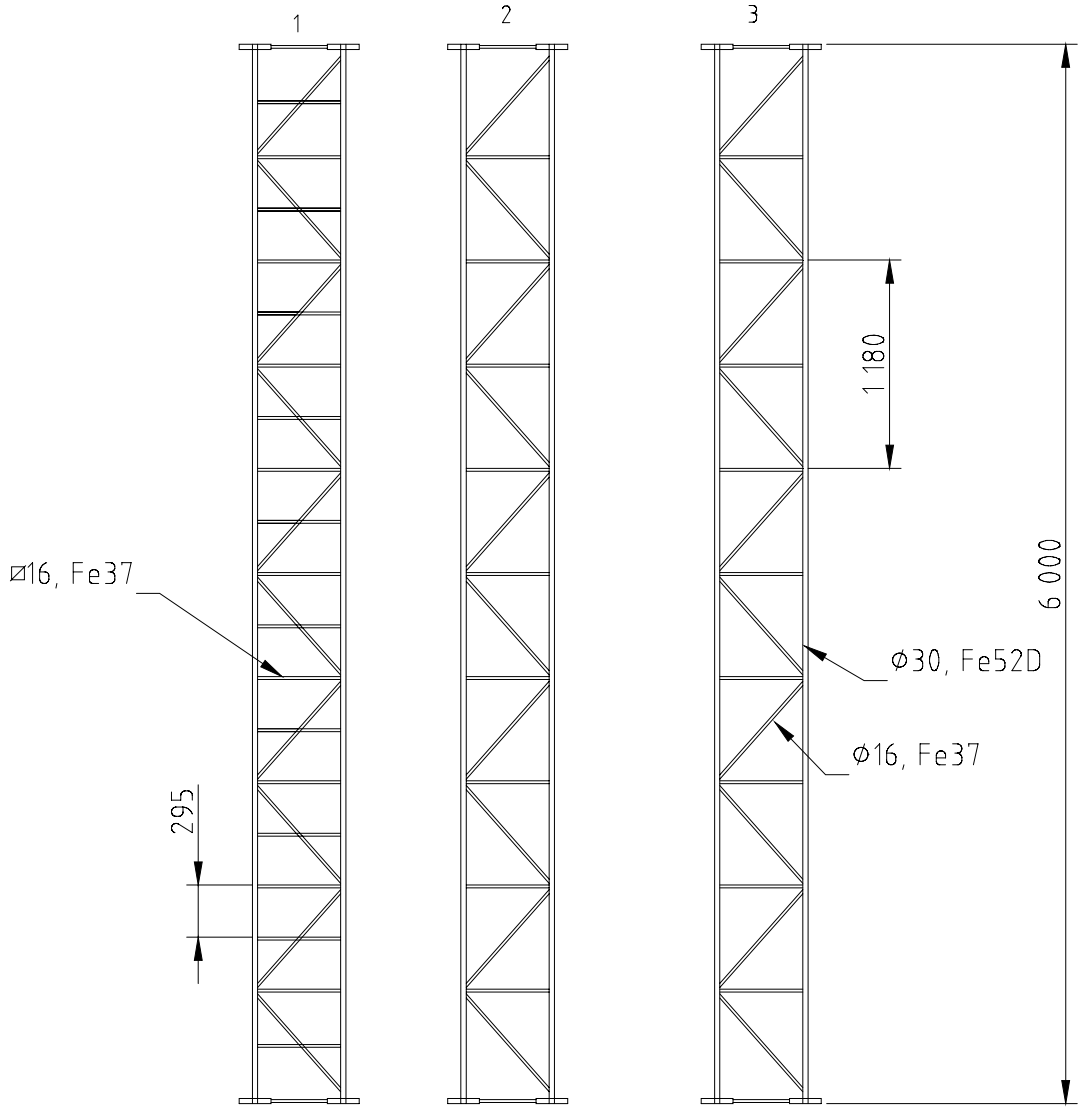

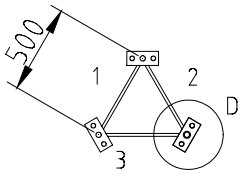

Max wind area	20 m2
Operational wind	15 m/s
Survival wind	45 m/s
Application	BTS

Aerial Oy
Box 22
04401 Järvenpää
Finland
Tel. +358 9 2790 120
Fax +358 9 2910 210
http://www.aerial.fi
aerial@aerial.fi

M700-40

General

Typical capacity: 30 m²
Height: up to 99 m

Design standards

Finnish "Masto-ohje 1980" and international standards BS, DIN and EIA

Mast data

Mast width: 700 mm
Cross-section: Triangular
Legs: Solid round steel Fe52D
Diagonals/horizontal bars: Fe37
Construction: Welded
Bolts: Hexagon DIN 931 M24, strength class 8.8
Nuts: Hexagon DIN 934
Washers: Plain DIN 7989

Guy wires

52 mm² and 87 mm² (typical), 107 mm² or even thicker in icing conditions

Surface finishing

Hot dip galvanizing according to international SFS-EN ISO 1461A standard. Minimum zinc layer thickness is 100 µm. Obstruction painting comes as an option.

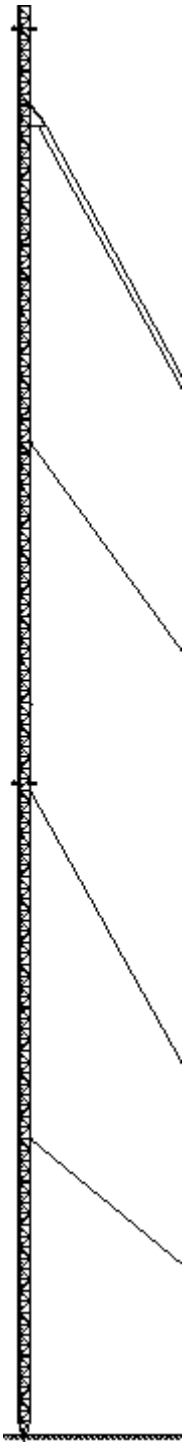

700/35-49

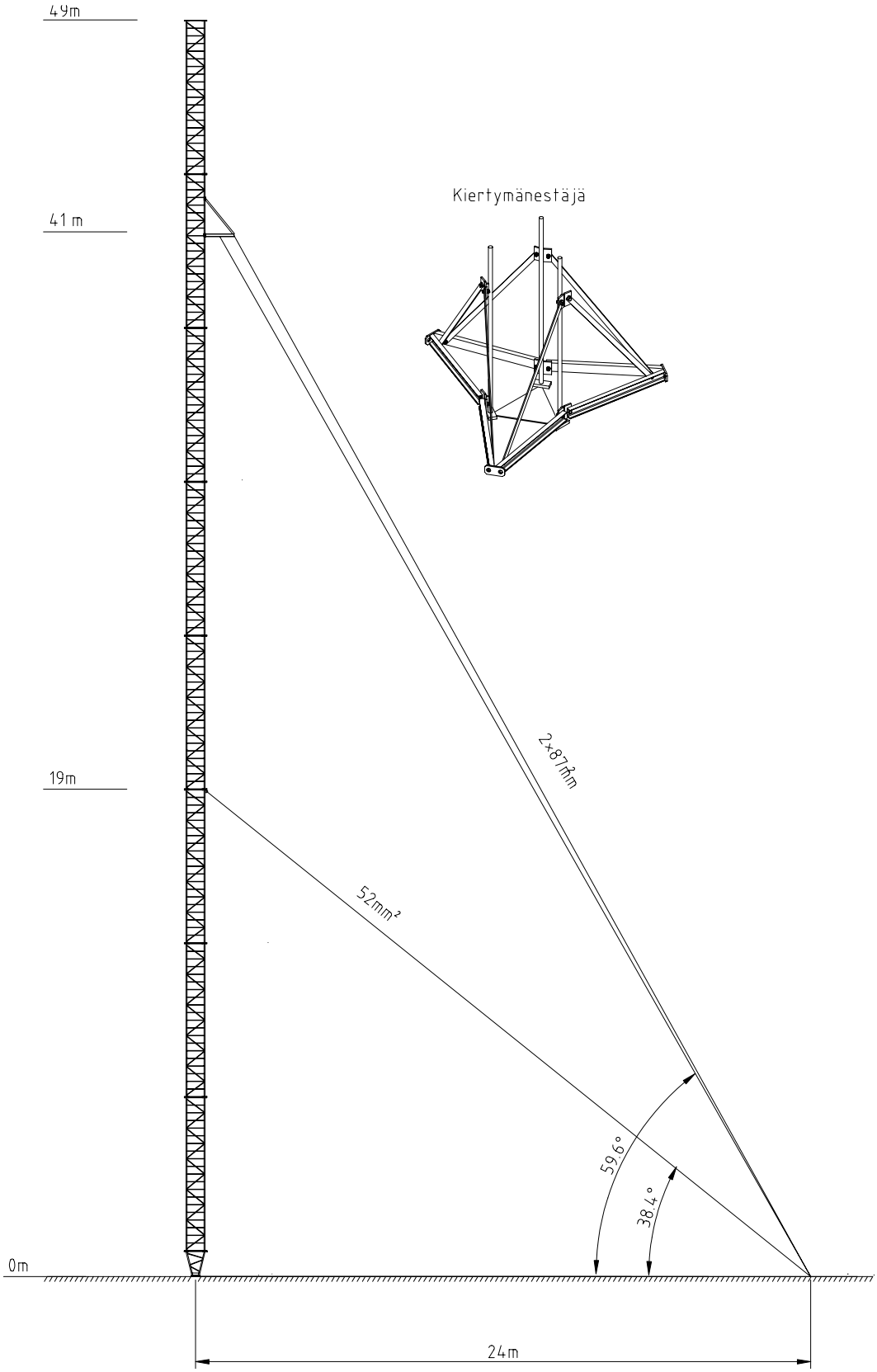

Aerial Oy
Box 22
04401 Järvenpää
Finland
Tel. +358 9 2790 120
Fax +358 9 2910 210
http://www.aerial.fi
aerial@aerial.fi

700/35-61

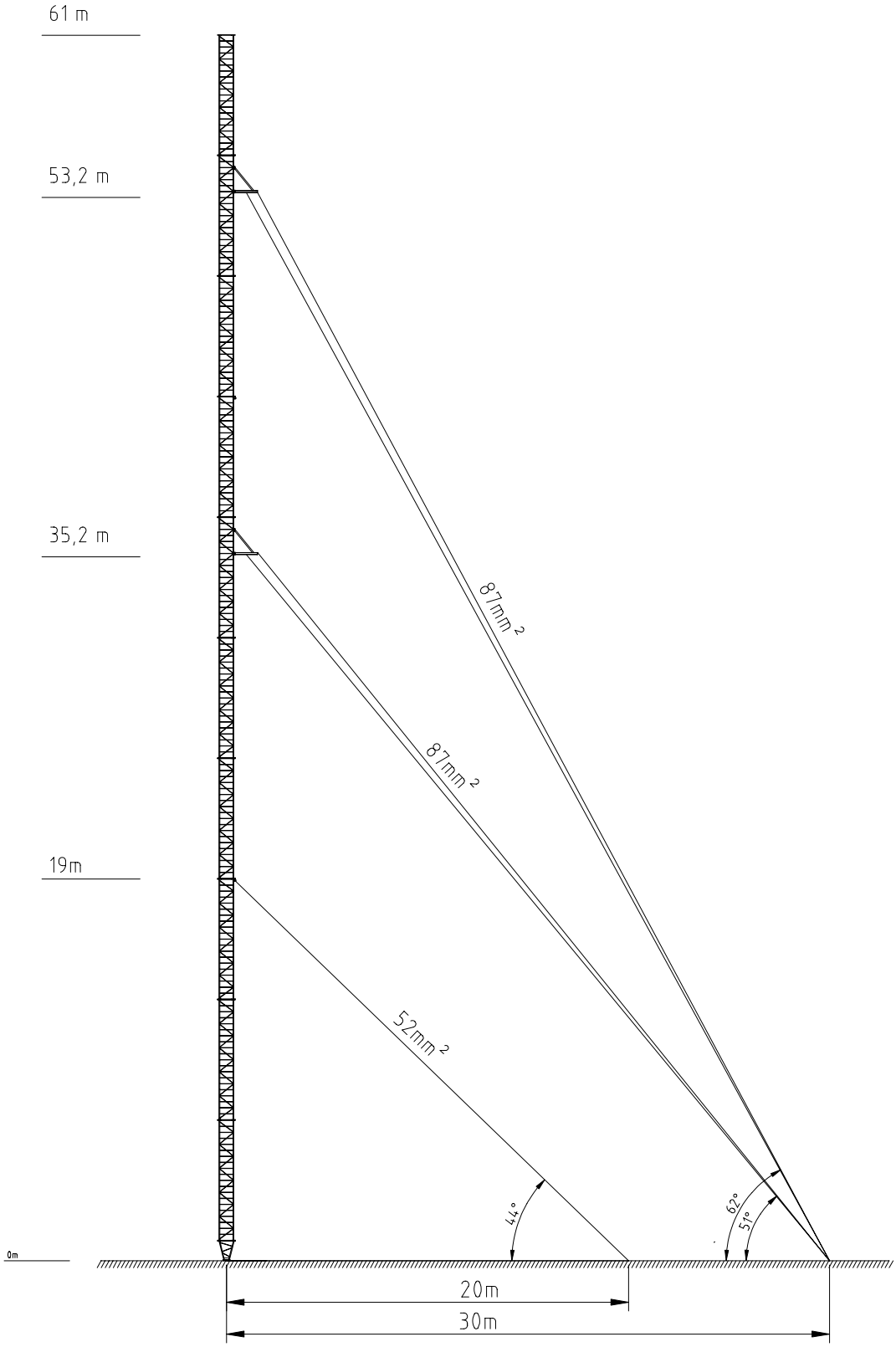

Aerial Oy
Box 22
04401 Järvenpää
Finland
Tel. +358 9 2790 120
Fax +358 9 2910 210
http://www.aerial.fi
aerial@aerial.fi

700/35-69,4

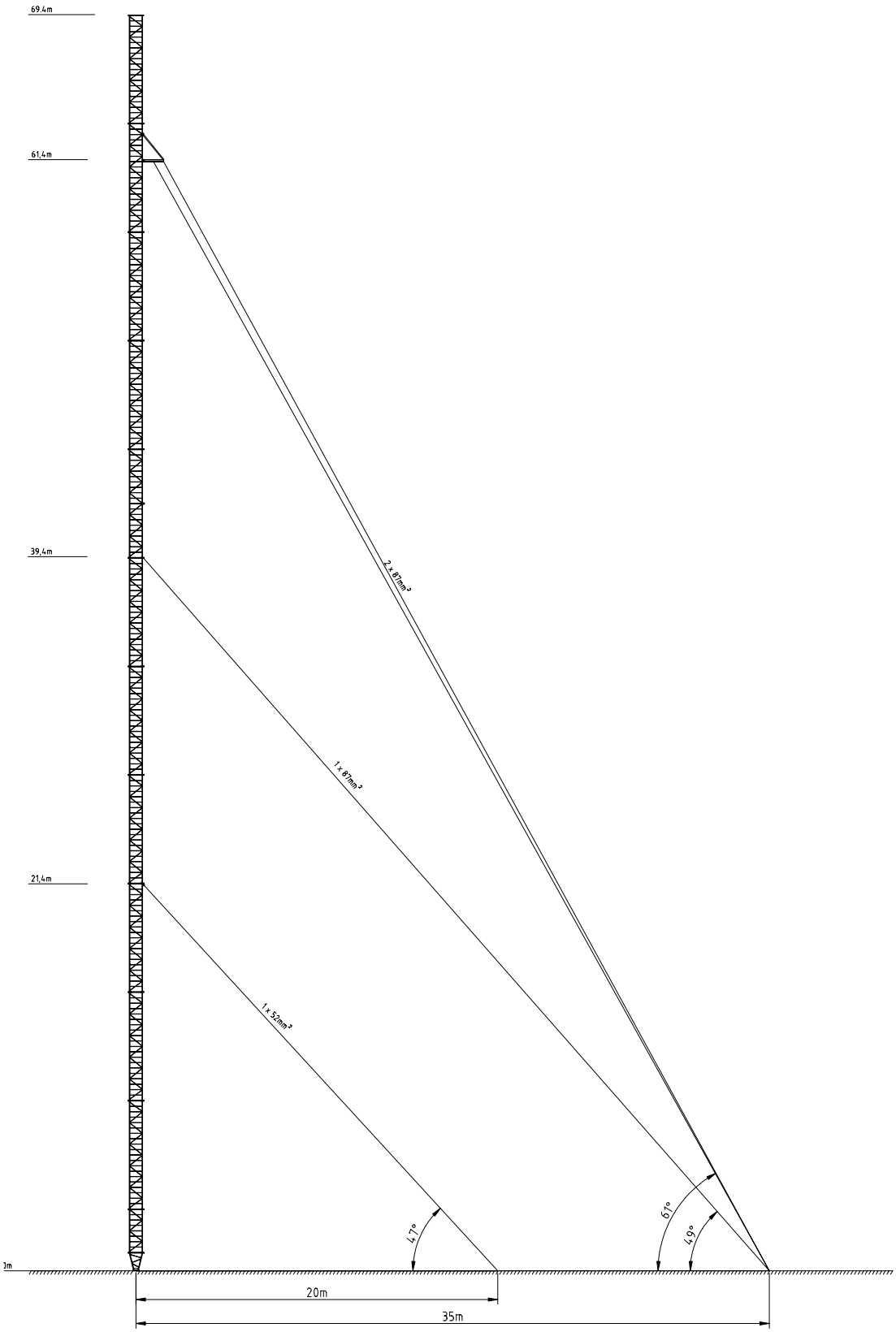

Aerial Oy
Box 22
04401 Järvenpää
Finland
Tel. +358 9 2790 120
Fax +358 9 2910 210
http://www.aerial.fi
aerial@aerial.fi

700/35-79

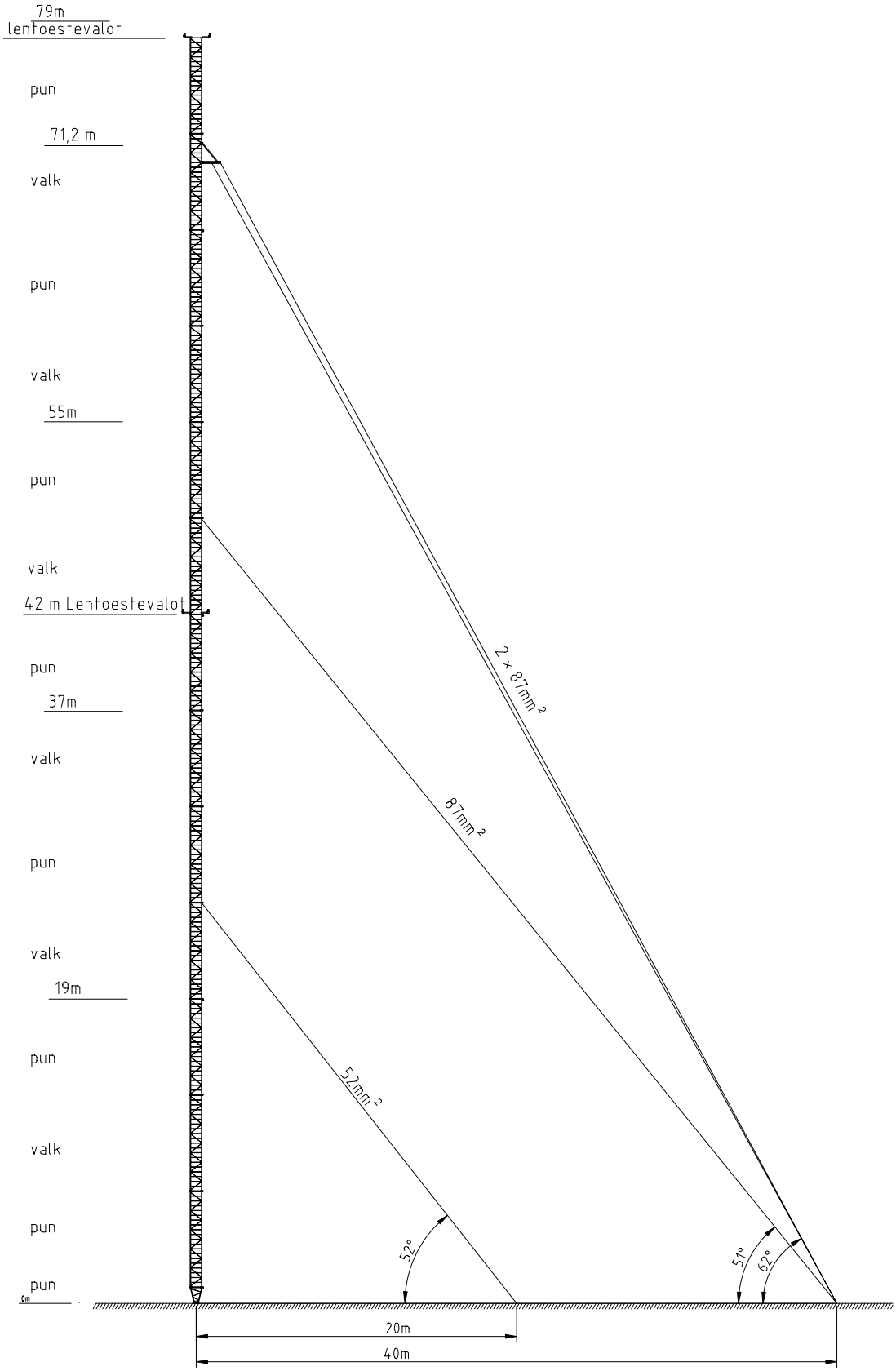

Aerial Oy
Box 22
04401 Järvenpää
Finland
Tel. +358 9 2790 120
Fax +358 9 2910 210
http://www.aerial.fi
aerial@aerial.fi

700/35-91

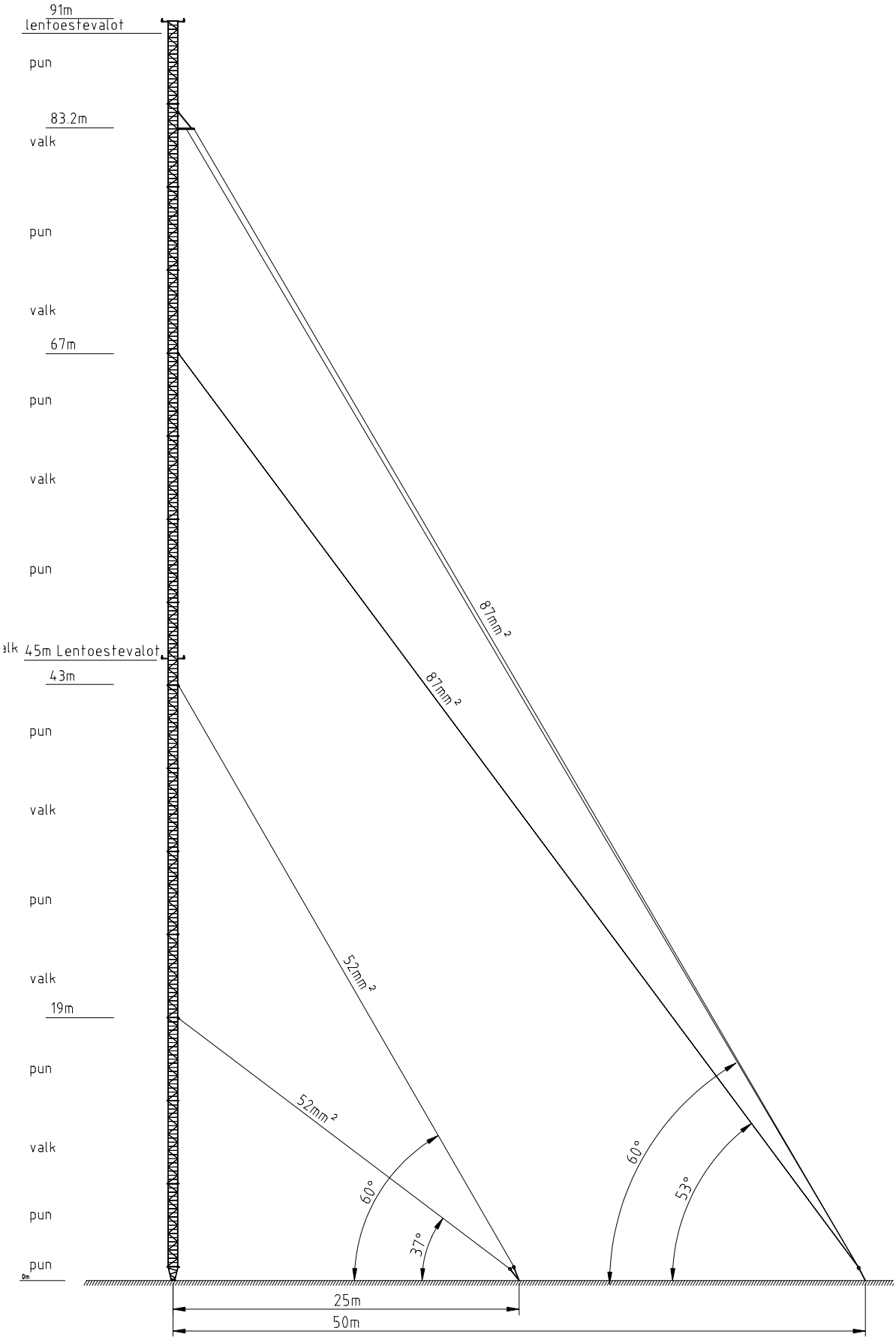

Aerial Oy

Box 22
04401 Järvenpää
Finland

Tel. +358 9 2790 120
Fax +358 9 2910 210

http://www.aerial.fi
aerial@aerial.fi

700/35-99,4

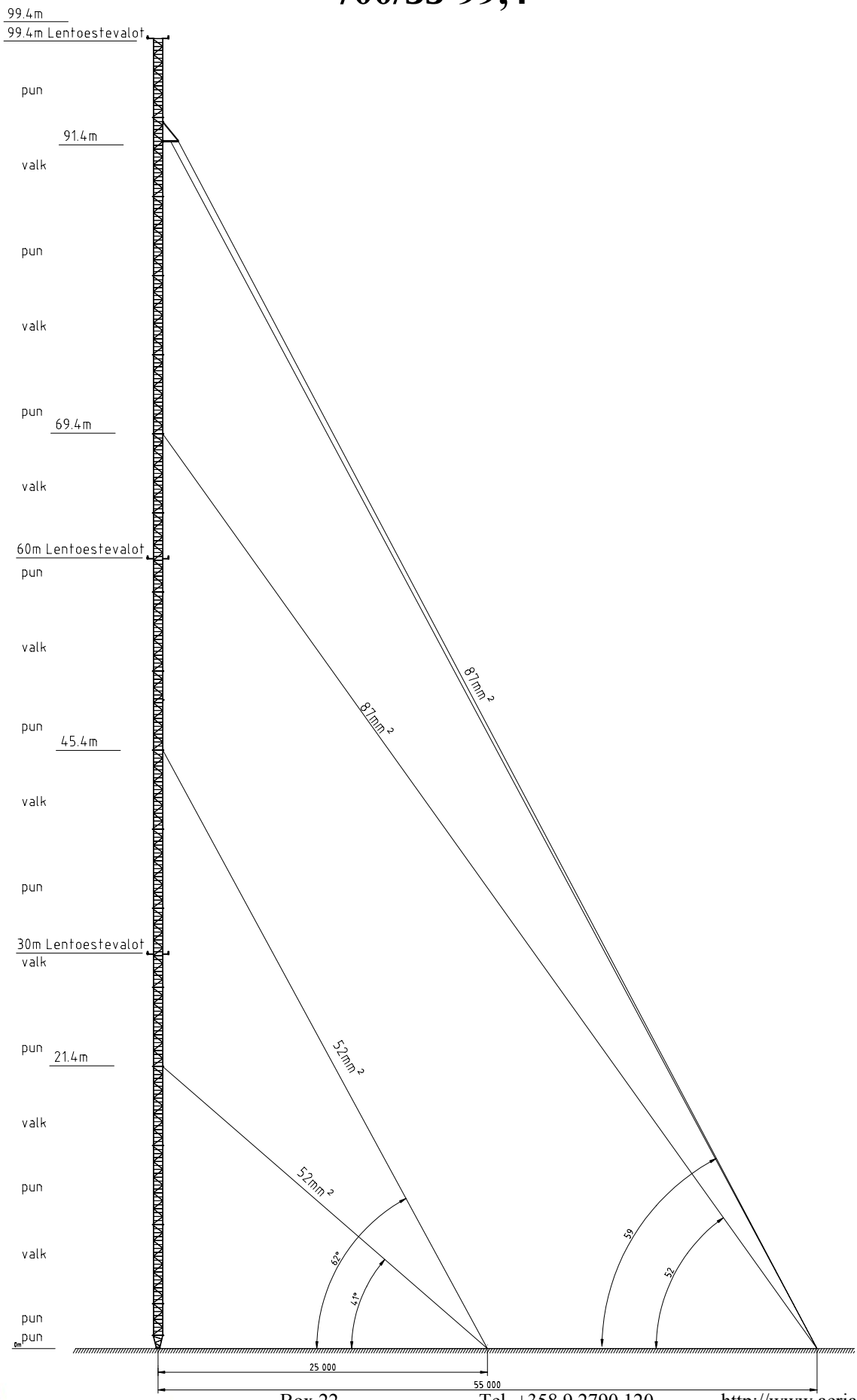

Aerial Oy
Box 22
04401 Järvenpää
Finland
Tel. +358 9 2790 120
Fax +358 9 2910 210
http://www.aerial.fi
aerial@aerial.fi

Mast element 700/40

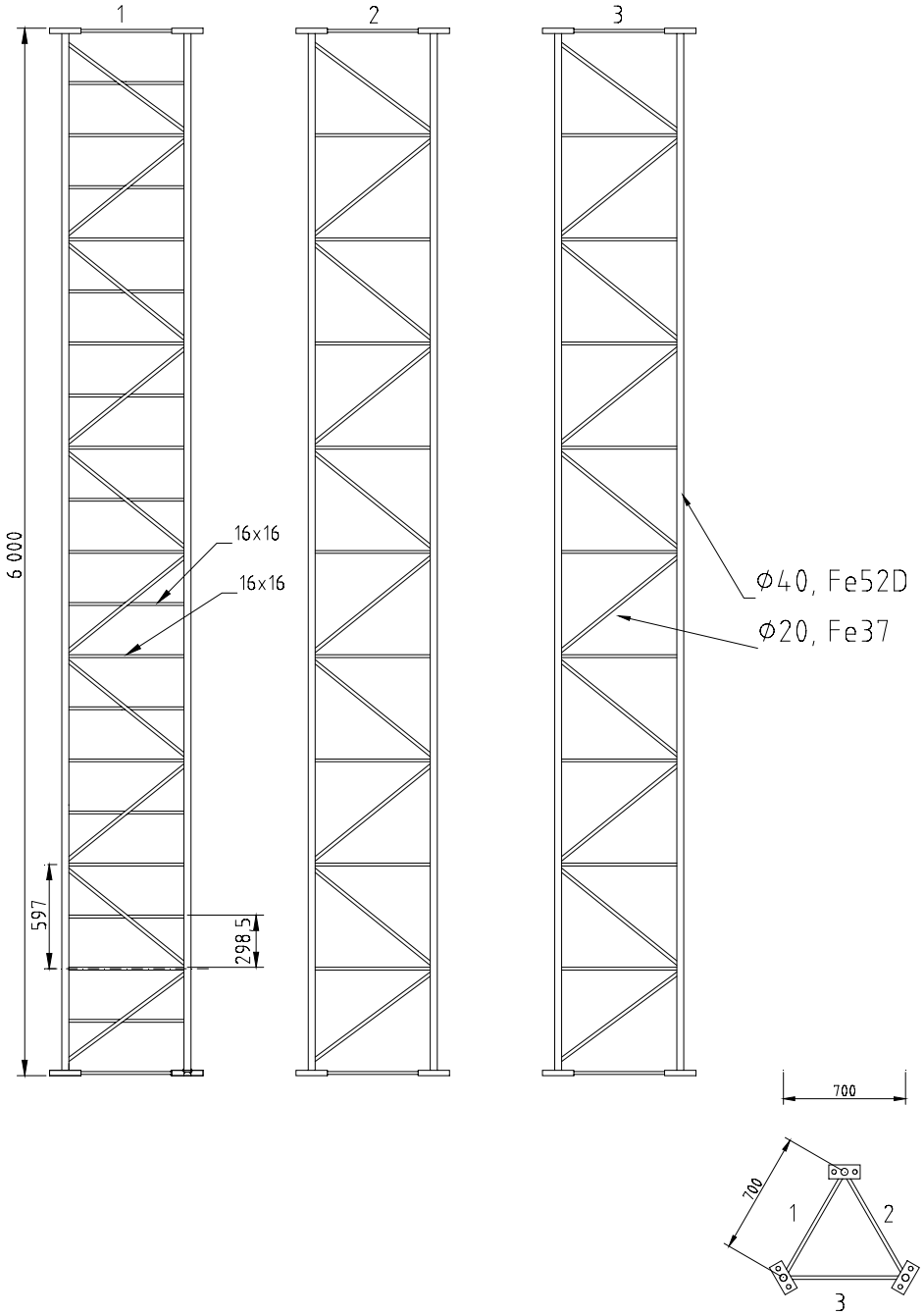

Max wind area	25 m2
Operational wind	15 m/s
Survival wind	45 m/s
Application	BTS

Aerial Oy
Box 22
04401 Järvenpää
Finland
Tel. +358 9 2790 120
Fax +358 9 2910 210
http://www.aerial.fi
aerial@aerial.fi

M800-40

General

Typical capacity: 40 m²
Height: up to 99 m

Design standards

Finnish "Masto-ohje 1980" and international standards BS, DIN and EIA

Mast data

Mast width: 800 mm
Cross-section: Triangular
Legs: Solid round steel Fe52D
Diagonals/horizontal bars: Fe37
Construction: Welded
Bolts: Hexagon DIN 931 M24, strength class 8.8
Nuts: Hexagon DIN 934
Washers: Plain DIN 7989

Guy wires

52 mm² and 87 mm² (typical), 107 mm² or even thicker in icing conditions

Surface finishing

Hot dip galvanizing according to international SFS-EN ISO 1461A standard. Minimum zinc layer thickness is 100 µm. Obstruction painting comes as an option.

Mast 800/40-69,4

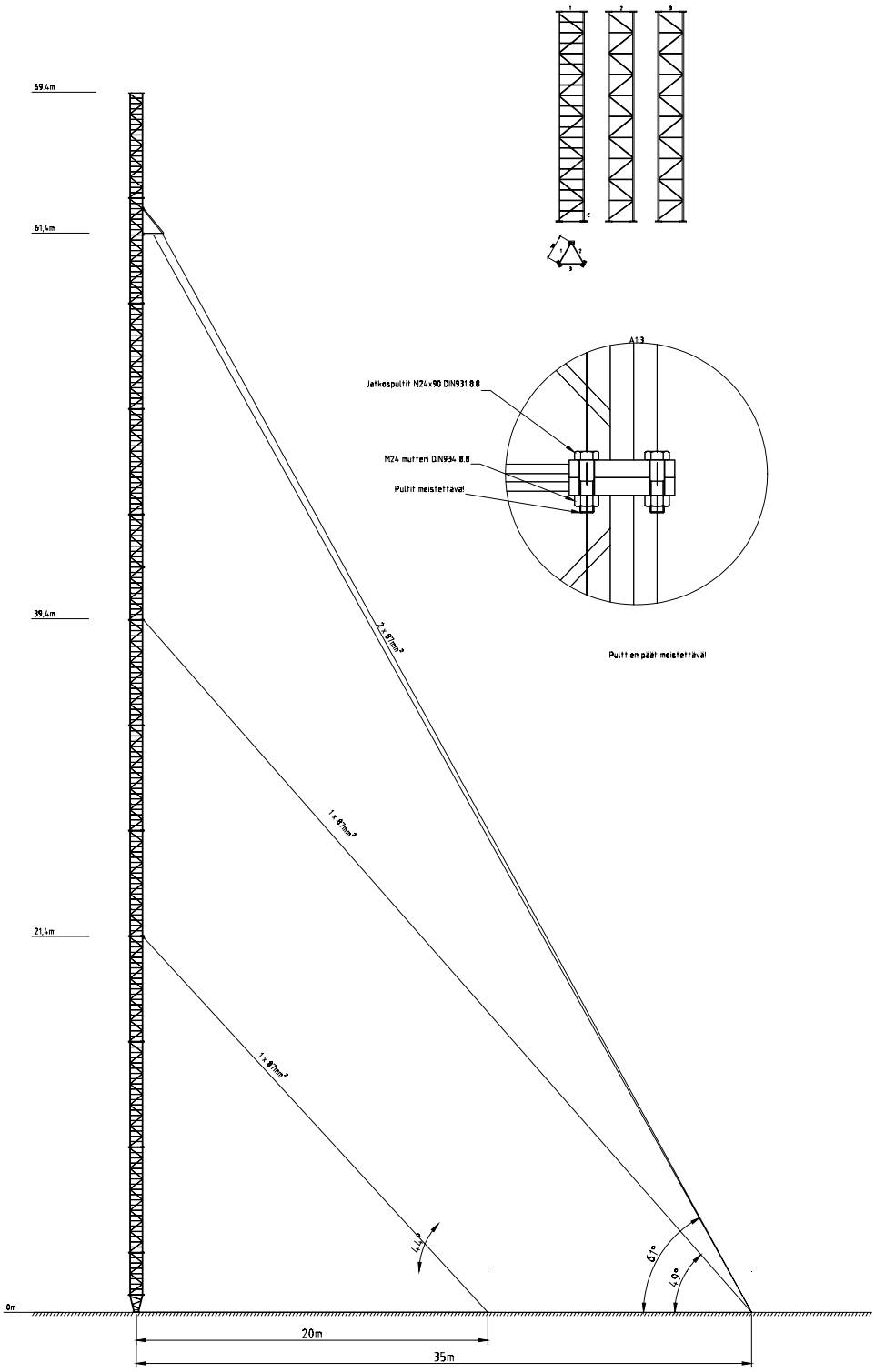

Max wind area	40 m2
Operational wind	15 m/s
Survival wind	45 m/s
Application	BTS

Aerial Oy
Box 22
04401 Järvenpää
Finland
Tel. +358 9 2790 120
Fax +358 9 2910 210
http://www.aerial.fi
aerial@aerial.fi

Mast 800/40-79

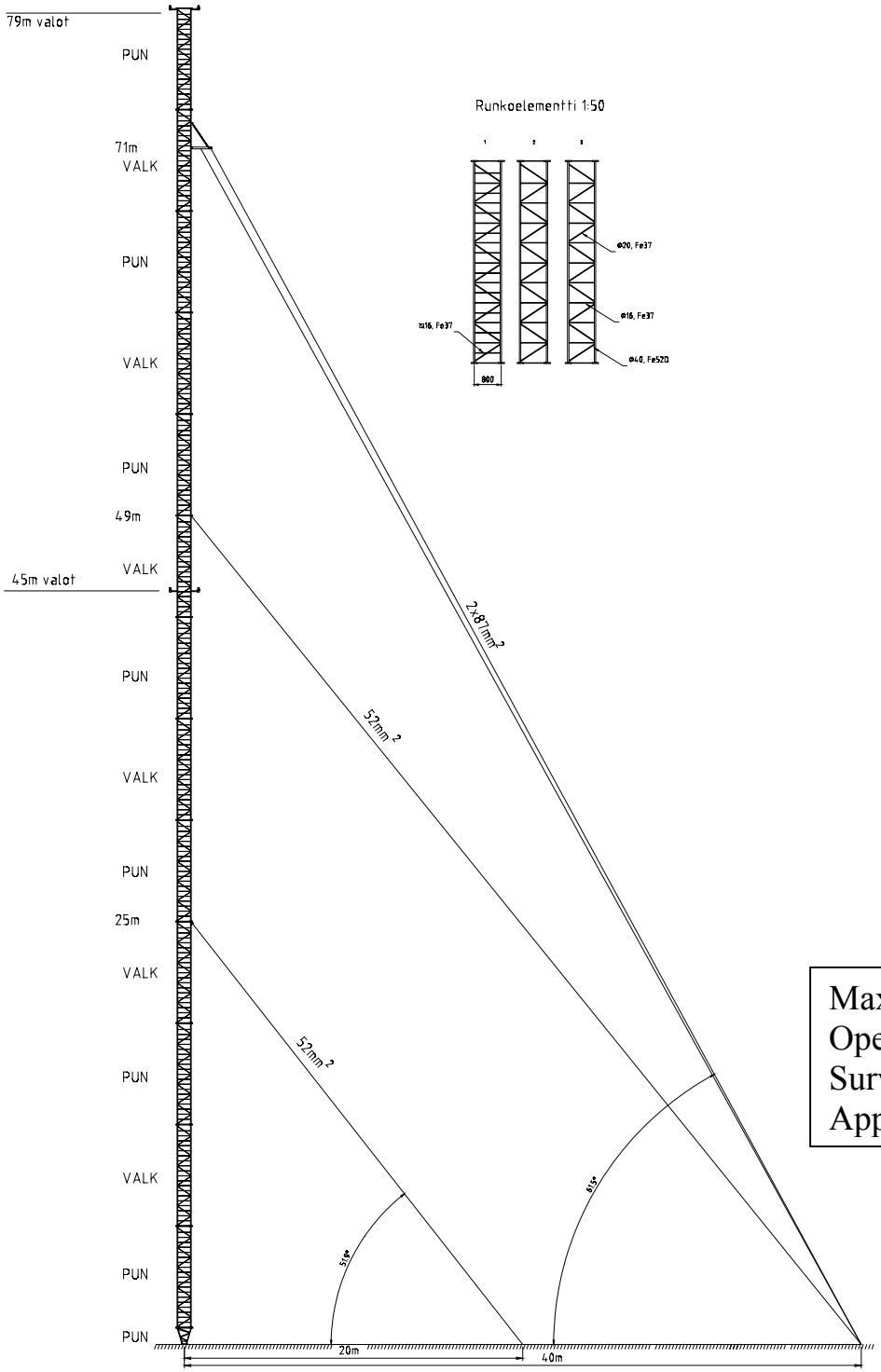

Max wind area	40 m2
Operational wind	15 m/s
Survival wind	45 m/s
Application	BTS

Aerial Oy
Box 22
04401 Järvenpää
Finland
Tel. +358 9 2790 120
Fax +358 9 2910 210
http://www.aerial.fi
aerial@aerial.fi

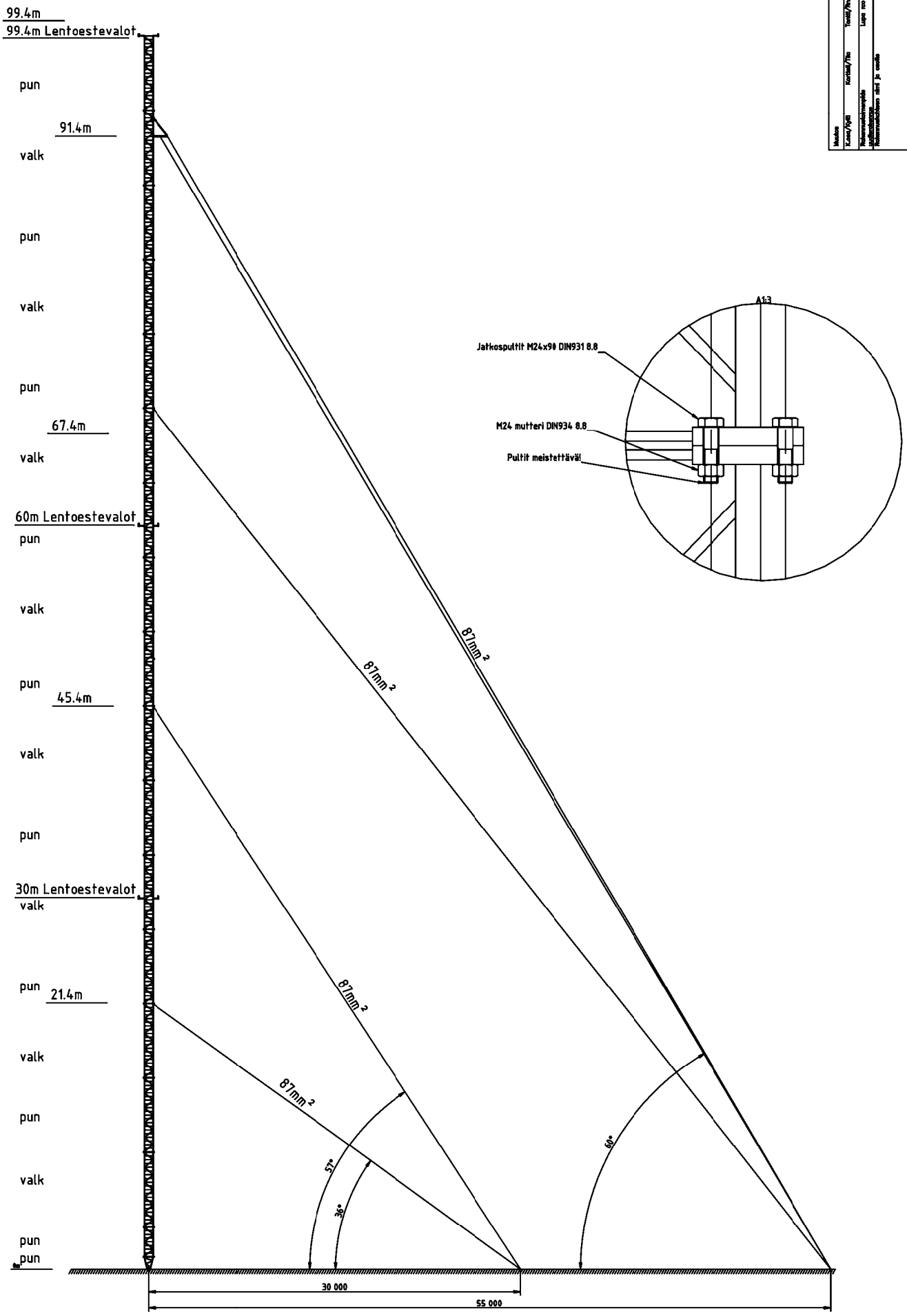

Muutos	Korvat/Pyyt	Tonttit/Pvno	Vrnnrmiksen erikoisvirmeisvaiqe varten	Pvm.	Muutt.
Suunnittelijan nimi, pätevyys ja allekirjoitus Arno Tiihonen 2.3.2004	Rakennuksen nimi ja osoite	Lapa 100	Piirustuksen nimi Piirustuksen numero M800/40-00	Mittakaava 1:150	

Suunnittelutie ja piirustuksen numero tiedoksi
RAK

Aerial Oy
Tel.+358-6-2710 120 Fax.+358-6-2810 210
Box 23 24401 Jakobstad Finland
http://www.aerial.fi e-mail:aerial@aerial.fi

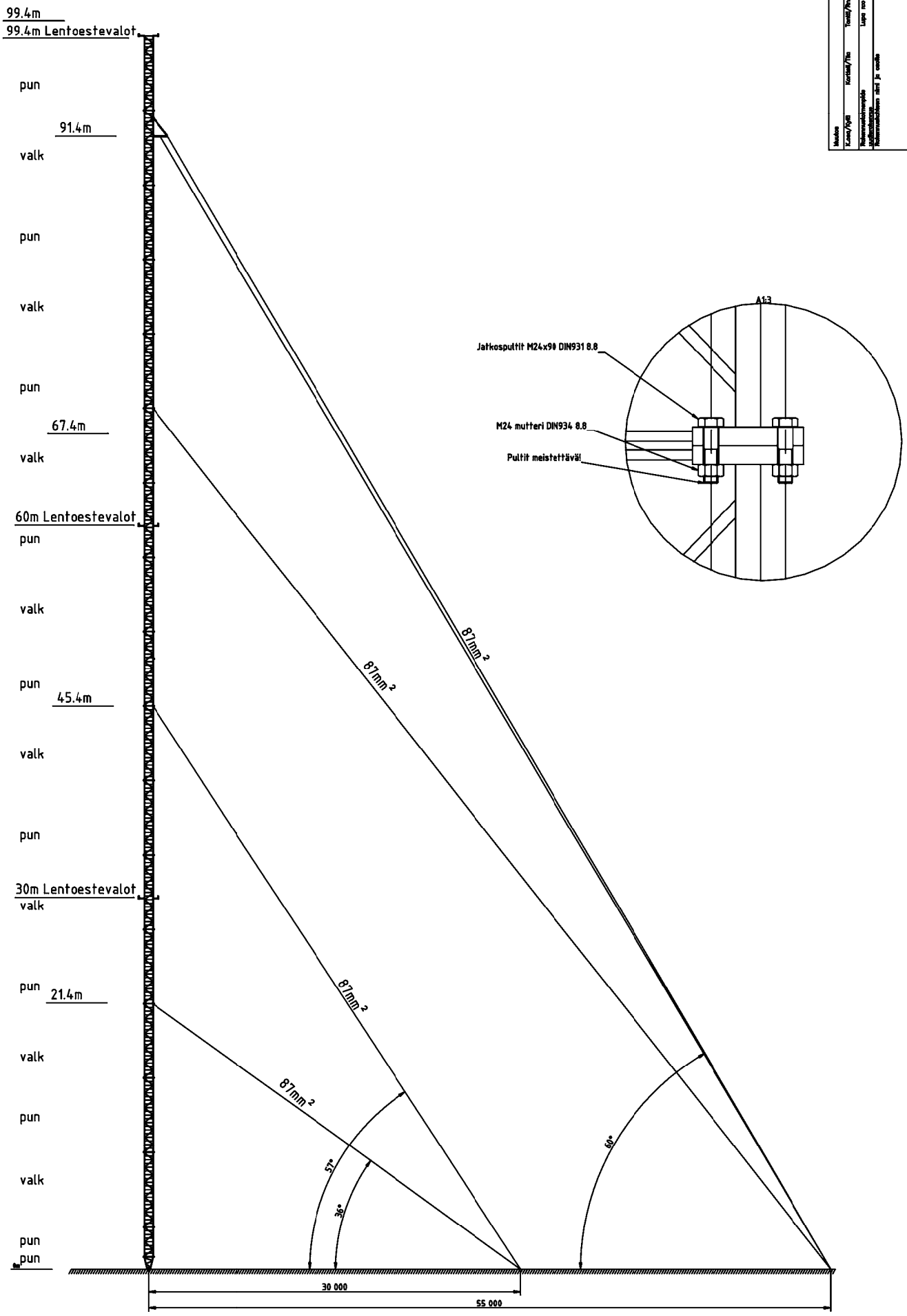

Muutos	Korvat/Pyyt	Tonttit/Pvno	Vrnnrmiksen erikoisvirmeisvaiqe varten	Pvm.	Muutt.
Suunnittelijan nimi, pätevyys ja allekirjoitus Arno Tiihonen 2.3.2004	Rakennuksen nimi ja osoite	Lapa 100	Piirustuksen nimi Piirustuksen numero M800/40-00	Mittakaava 1:150	

Suunnittelutie ja piirustuksen numero tiedoksi
RAK

Aerial Oy
Tel.+358-6-2710 120 Fax.+358-6-2810 210
Box 23 24401 Jakobstad Finland
http://www.aerial.fi e-mail:aerial@aerial.fi

Element 800/40

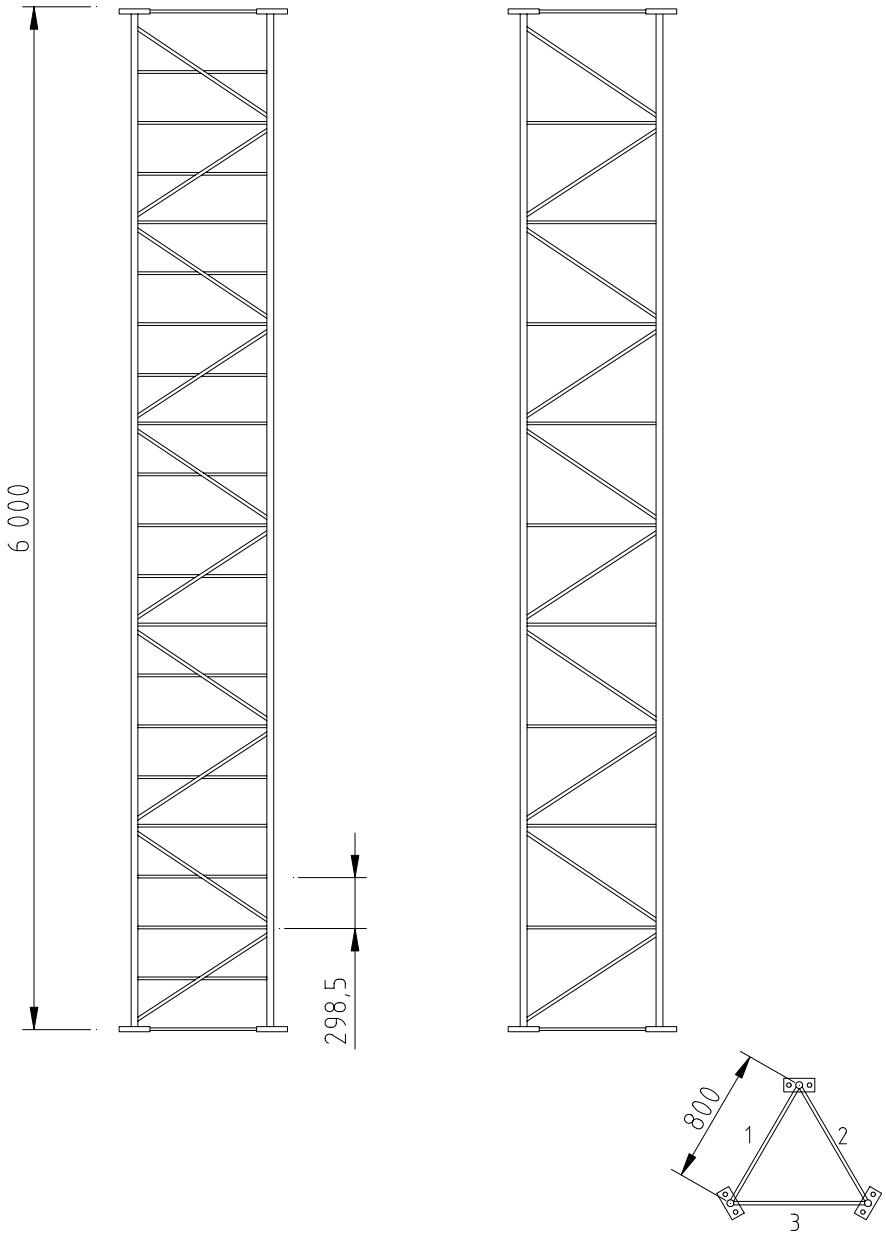

Max wind area	40 m2
Operational wind	15 m/s
Survival wind	45 m/s
Application	BTS

Aerial Oy
Box 22
04401 Järvenpää
Finland
Tel. +358 9 2790 120
Fax +358 9 2910 210
http://www.aerial.fi
aerial@aerial.fi

M800-50

General

Typical capacity: 40 m²
Height: up to 150 m

Design standards

Finnish "Masto-ohje 1980" and international standards BS, DIN and EIA

Mast data

Mast width: 800 mm
Cross-section: Triangular
Legs: Solid round steel Fe52D
Diagonals/horizontal bars: Fe37
Construction: Welded
Bolts: Hexagon DIN 931 M24, strength class 8.8
Nuts: Hexagon DIN 934
Washers: Plain DIN 7989

Guy wires

52 mm² and 87 mm² (typical), 107 mm² or even thicker in icing conditions

Surface finishing

Hot dip galvanizing according to international SFS-EN ISO 1461A standard. Minimum zinc layer thickness is 100 µm. Obstruction painting comes as an option.

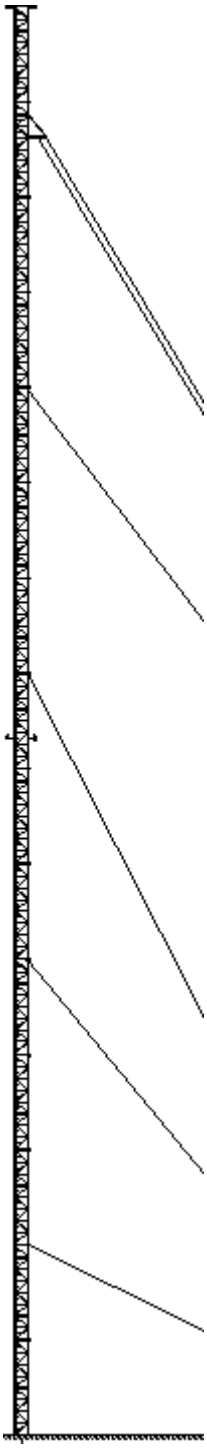

800/50-91i (for icy conditions)

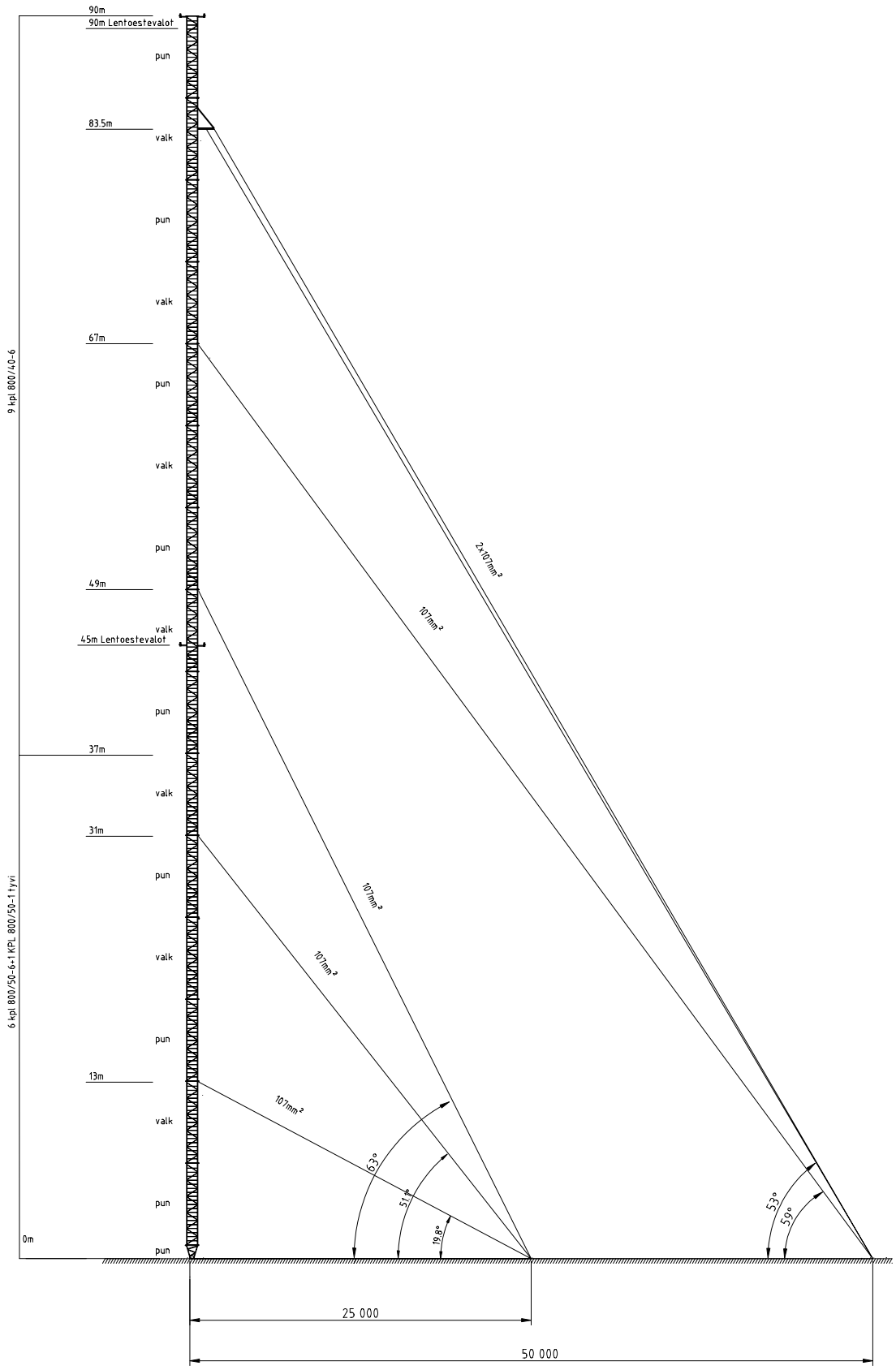

Aerial Oy

Box 22
04401 Järvenpää
Finland

Tel. +358 9 2790 120
Fax +358 9 2910 210

http://www.aerial.fi
aerial@aerial.fi

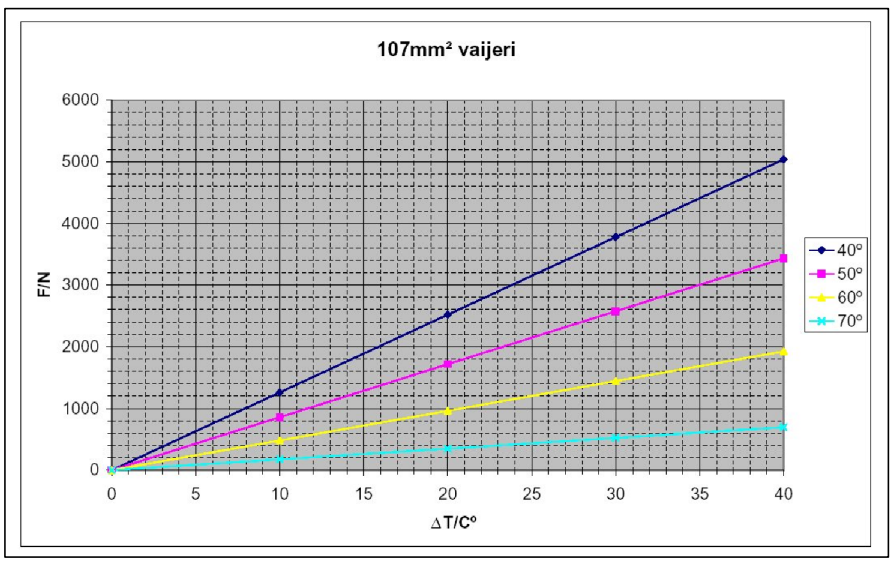

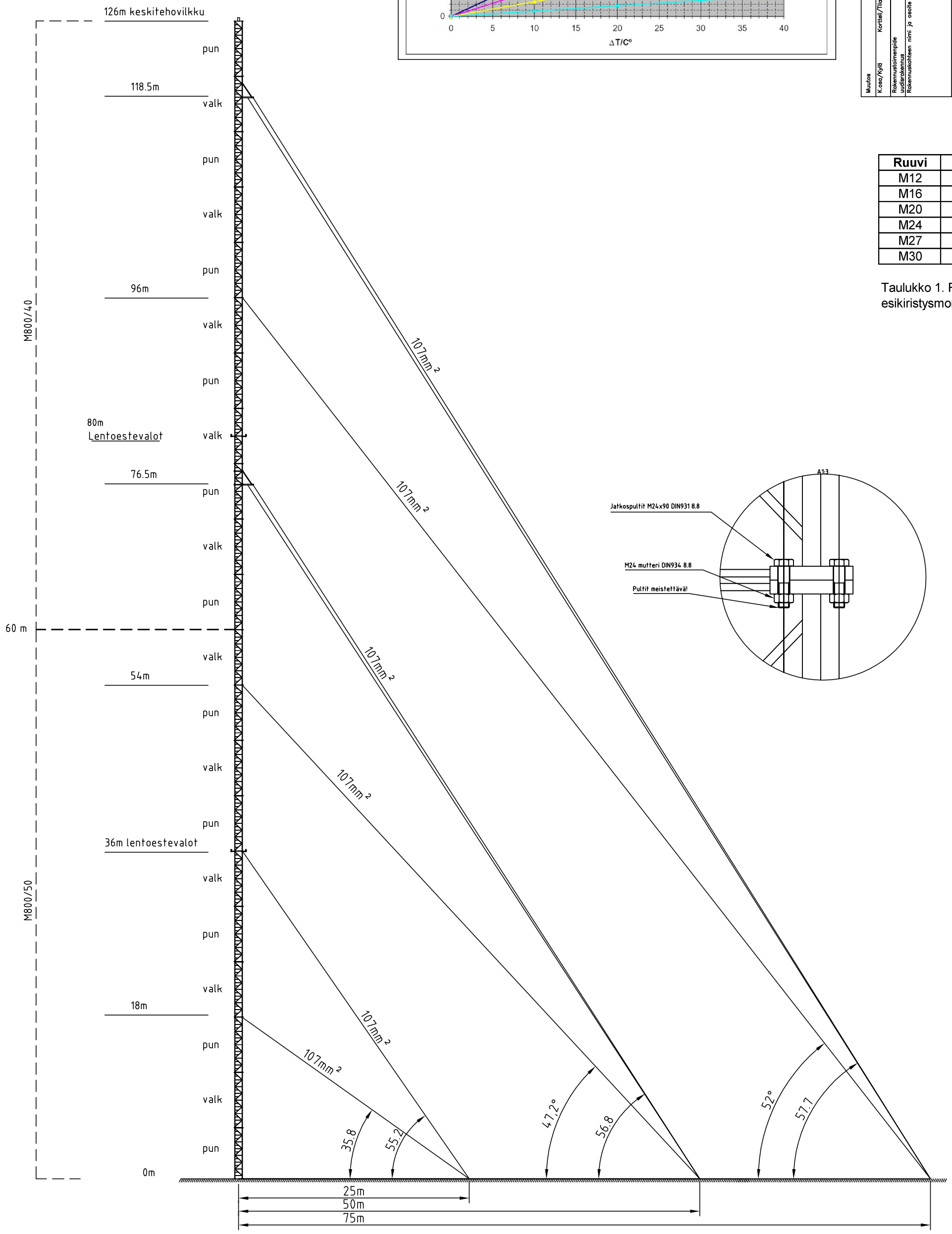

Ruuvi	M/Nm
M12	80
M16	120
M20	250
M24	380
M27	550
M30	700

Taulukko 1. Ruuvien esikiristysmomentit

Muutos	K.aso/Kylä	Korttel/Tila	Tontti/Rno	Pvm.	Muutt.
				Viranomaisen arkistointimerkintöjä varten	
	Rakennustoimenpide uudisrakennus		Lupa n:o	Piirustuslaji rakennekuva	
	Rakennuskohteen nimi ja osoite			Piirustuksen sisältö: Hanatettu masto M800/40-126	Mittakaava 1:200
	Suunnittelijan nimi, päivämäärä ja allekirjoitus: Aerial Oy / Arno Tiihonen 20.04.2002			Suunnittelualo ja piirustuksen numero: RAK	Muutos

Aerial Oy
Tel.+358-9-2790 120 Fax.+358-9-2910 210
Box 22 04401 Järvenpää Finland
http://www.aerial.fi aerial@aerial.fi

800/50-146

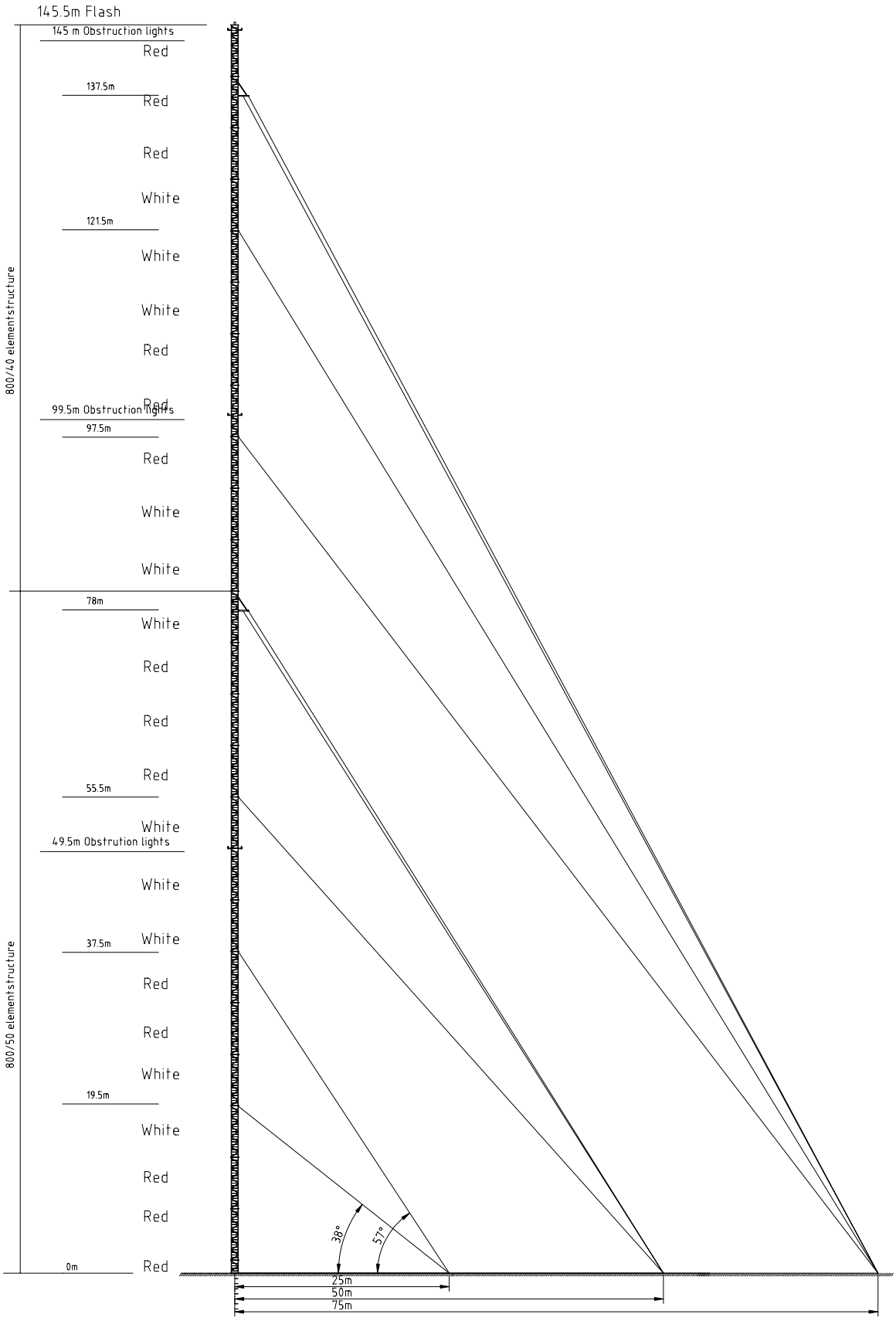

Aerial Oy
Box 22
04401 Järvenpää
Finland
Tel. +358 9 2790 120
Fax +358 9 2910 210
http://www.aerial.fi
aerial@aerial.fi

Element 800/50 for icy conditions

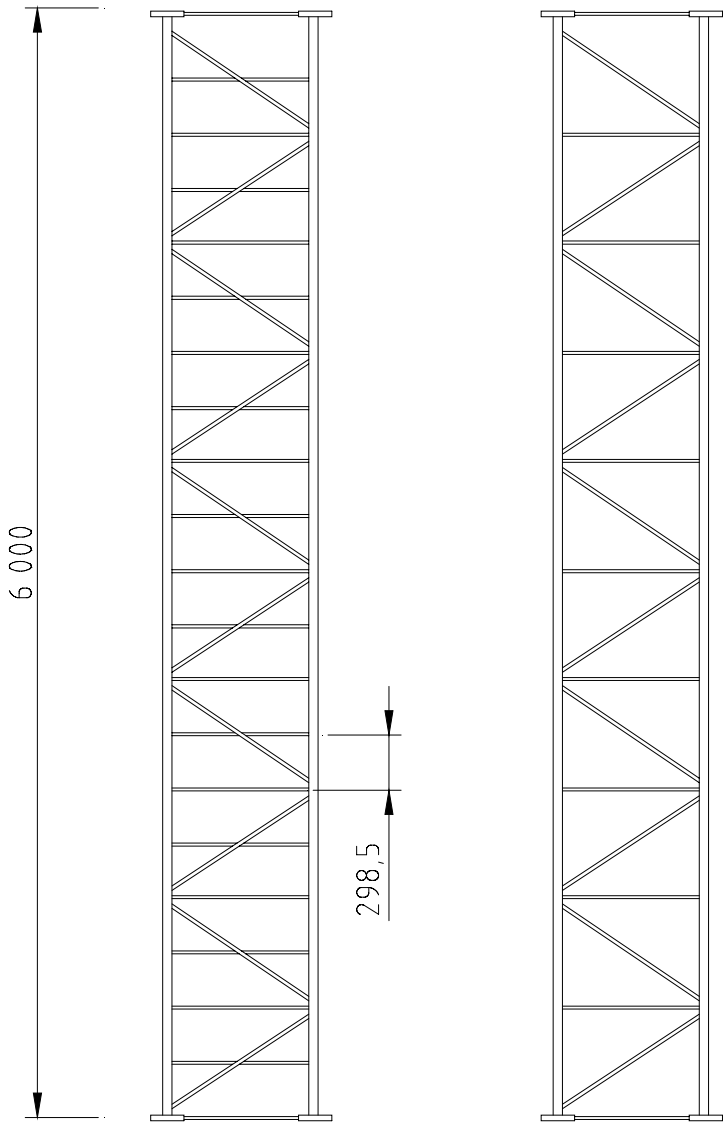

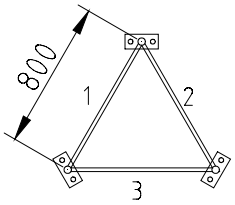

Max wind area	30 m2
Operational wind	15 m/s
Survival wind	45 m/s
Application	BTS

Aerial Oy
Box 22
04401 Järvenpää
Finland
Tel. +
Fax +358 9 2910 210
aerial@aerial.fi

Element 1400/114-6

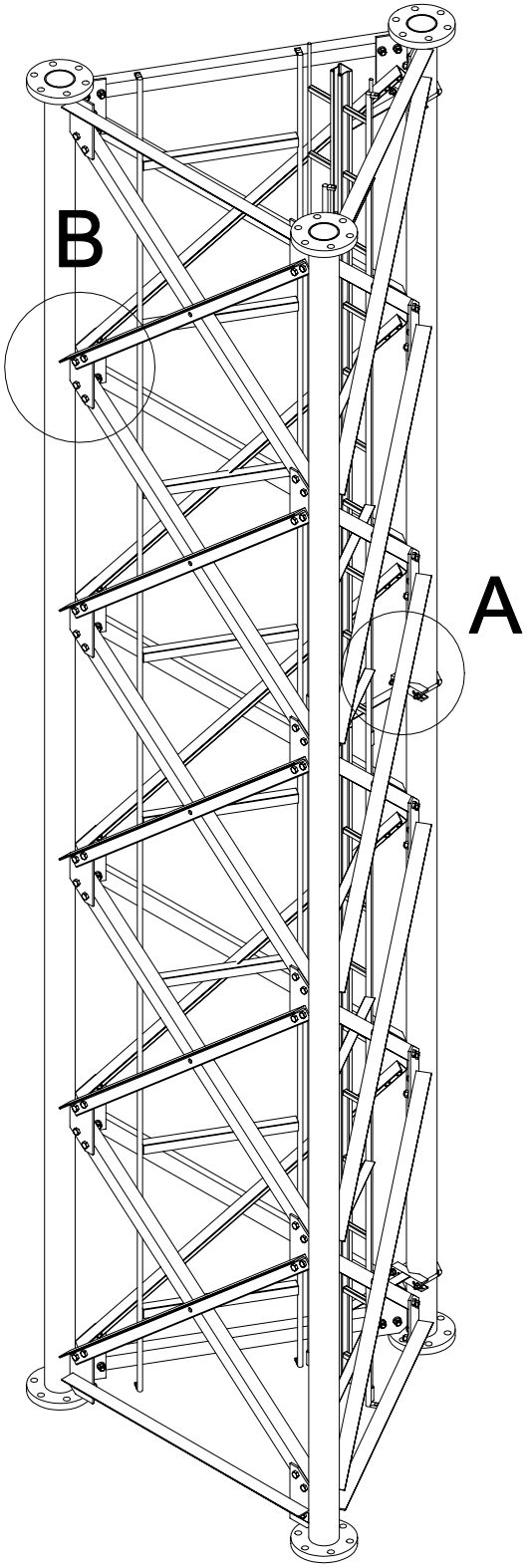

Aerial Oy
Box 22
04401 Järvenpää
Finland
Tel. +358 9 2790 120
Fax +358 9 2910 210
http://www.aerial.fi
aerial@aerial.fi

Gyued mast 1400/114

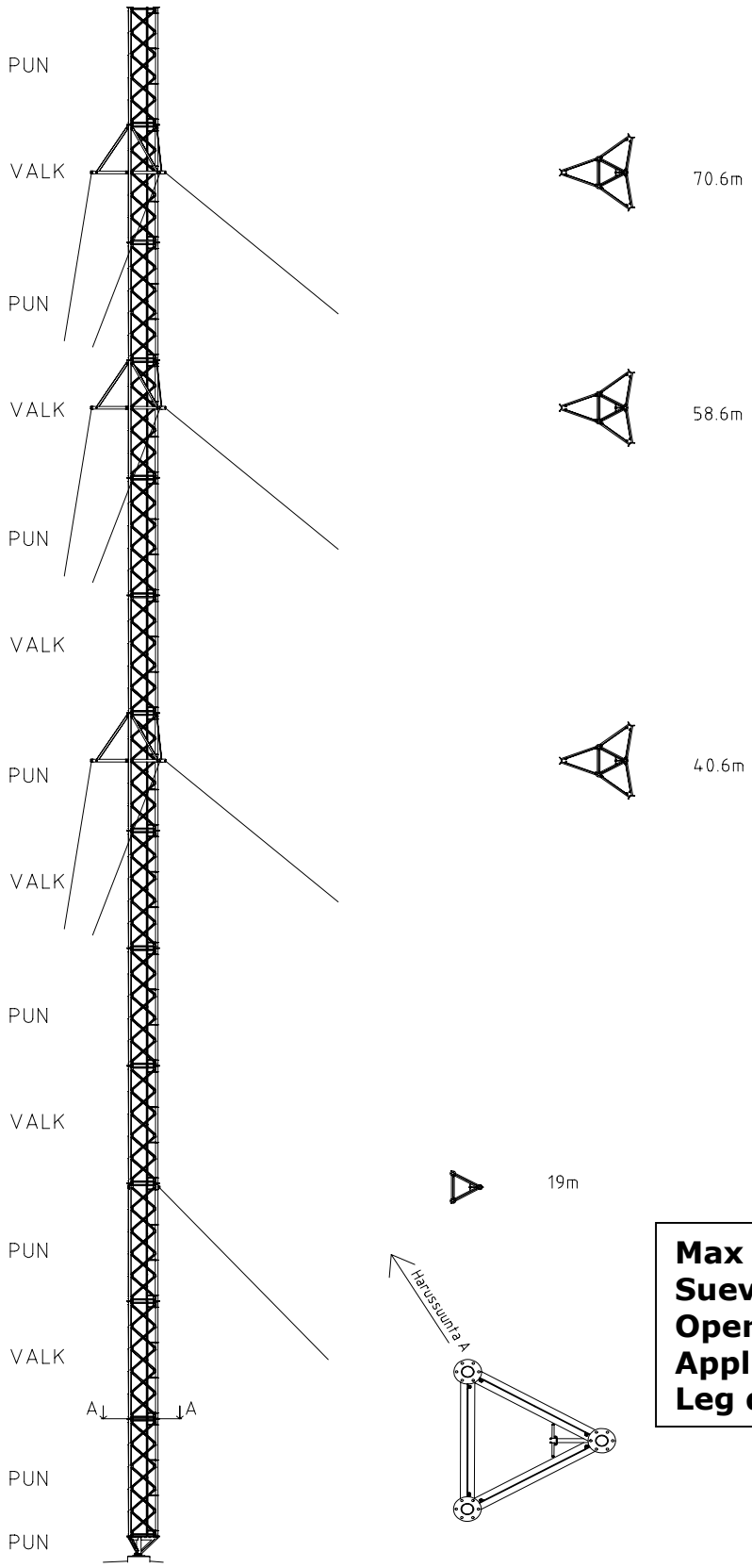

Max wind area 60 m2
Suevival wing 45 m/s
Operational wind 20 m/s
Application BTS
Leg diameter 114*6,3

Aerial Oy
Box 22
04401 Järvenpää
Finland
Tel. +358 9 2790 120
Fax +358 9 2910 210
http://www.aerial.fi
aerial@aerial.fi

A (1 : 10)

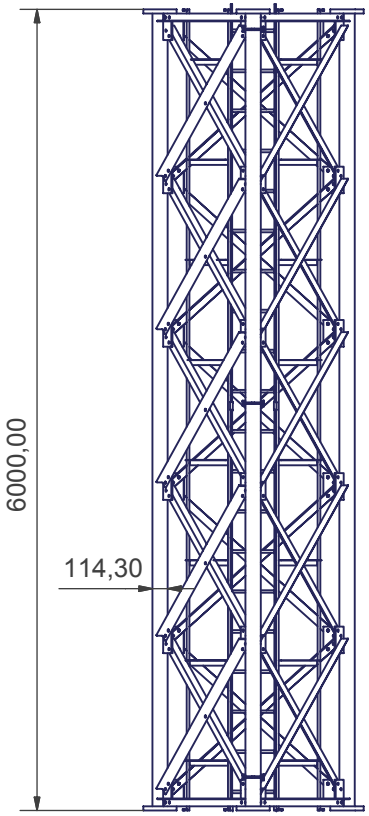

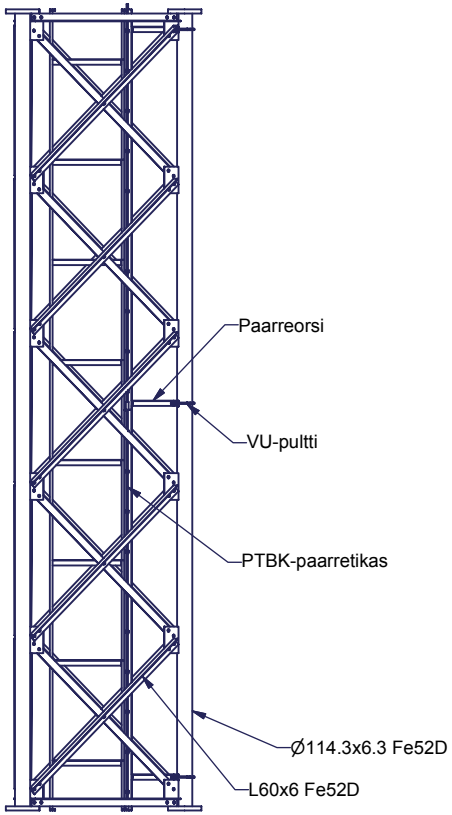

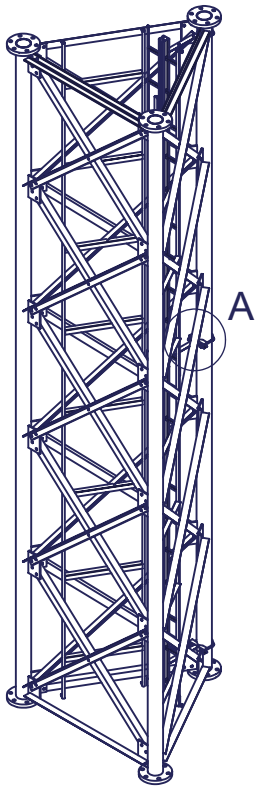

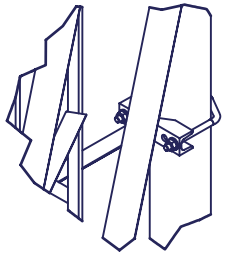

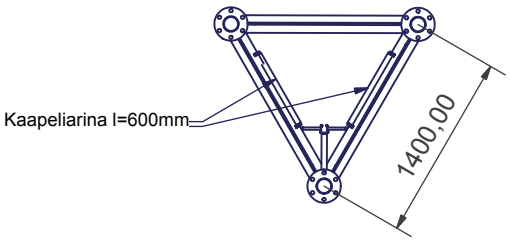

Kaikki kantavat rakenteet Fe52D

Osa	Piirustus / Nimike nro	Nimitys	Muoto,malli	Määrä	Laatu	Standardi	Kpl

Toleroimattomat mitat	Hitsatut rakenteet SFS 3393, DIN 8570				
Pintakäsittely	Hzn		Väritys	-	
Status	WorkInProgress	Mittakaava	Tuote	Digita/Vuotso	Massa 643,3 kg
Suunn.	11.2.2003 arno		Liittyy	Masto M1400-114-80	Nimike nro 1400elem
Tark.	5.11.2003 APT				Korvaa
Aerial Oy			Nimitys	Elementti M1400-114	Piirustus nro 001
Malli	1400elem.iam		Piirustus	1400elem.idw	Sivu 1 / 1 Koko A3

Aerial Oy
Pietolankatu 9, 04400 Järvenpää
tel. +358-9-2790120, fax +358-9-2910210
www.aerial.fi

Rev	Kuvaus	Tekijä	Pvm

Self supporting masts

Aerial offers a comprehensive selection of self supporting mast structures for sites where building site area is limited. The greatest advantages of these towers are small building area requirement as said and maybe some kind of esthetic character thanks to absence of guy ropes.

Common purpose of use:

- Telecommunications (UMTS, GSM900 and GSM1800, WLAN and so forth...)
- Radar antenna tower
- Camera/video tower
- Lighting tower

Self supporting masts construct of massive foundation and body elements which are tapered towards the top. Typical height range is from 4 m to over 200 m.

Aerial's self supporting mast model variety consists of four basic element types: Solid round steel legged, Round hollow shaft steel (RHS) legged, L-profile legged and tubular ones. Element range includes top sections which have constant face width - like in guyed masts - to enable convenient antenna installation.

Aerial masts are always hot dip galvanized and painted in obstruction colours (alternating red and white) as needed.

Solid round steel masts

General

Typical capacity: 8 m²
Height: up to 50 m

Design standards

Finnish "Masto-ohje 1980" and international standards BS, DIN and EIA

Mast data

Mast width: 1666 mm (base)
Cross-section: Triangular
Legs: Solid round steel Fe52D
Diagonals/horizontal bars: Fe37
Construction: Welded
Bolts: Hexagon DIN 931 M24, strength class 8.8
Nuts: Hexagon DIN 934
Washers: Plain DIN 7989

Surface finishing

Hot dip galvanizing according to international SFS-EN ISO 1461A standard. Minimum zinc layer thickness is 100 µm. Obstruction painting comes as an option.

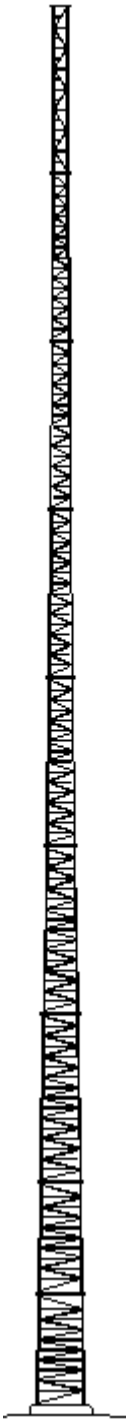

Triangle 500/25-6

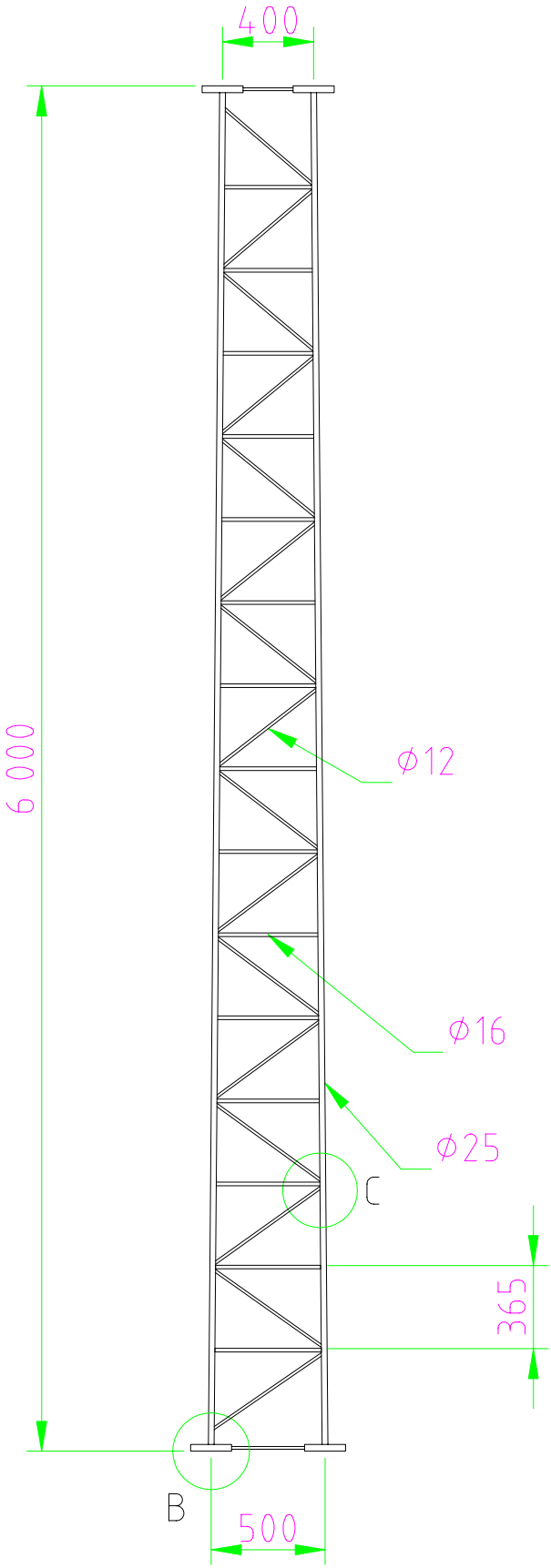

Aerial Oy
Box 22
04401 Järvenpää
Finland
Tel. +358 9 2790 120
Fax +358 9 2910 210
http://www.aerial.fi
aerial@aerial.fi

Triangle 500/25-8-400

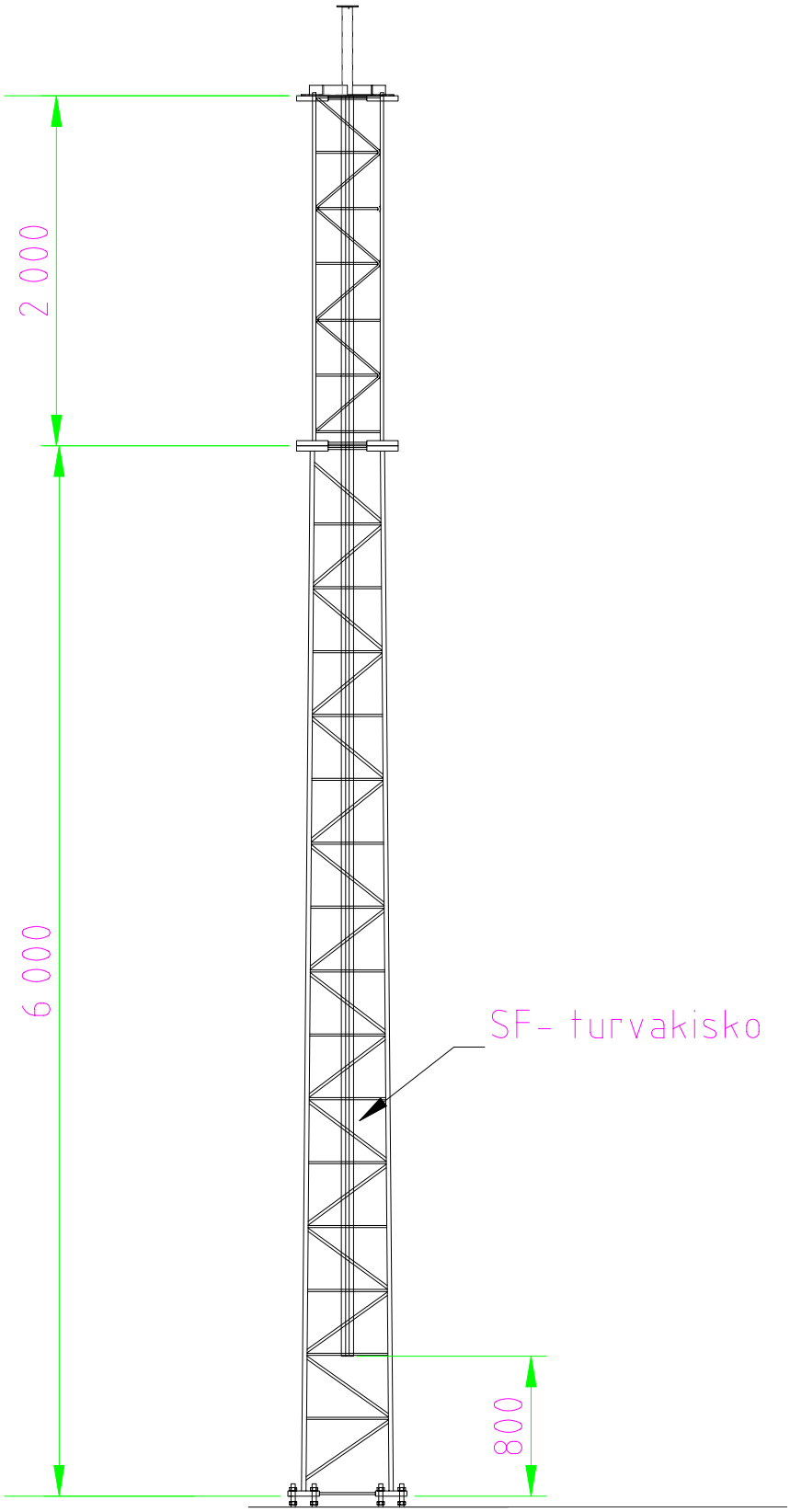

Aerial Oy
Box 22
04401 Järvenpää
Finland
Tel. +358 9 2790 120
Fax +358 9 2910 210
http://www.aerial.fi
aerial@aerial.fi

Triagle 500/25-10-400

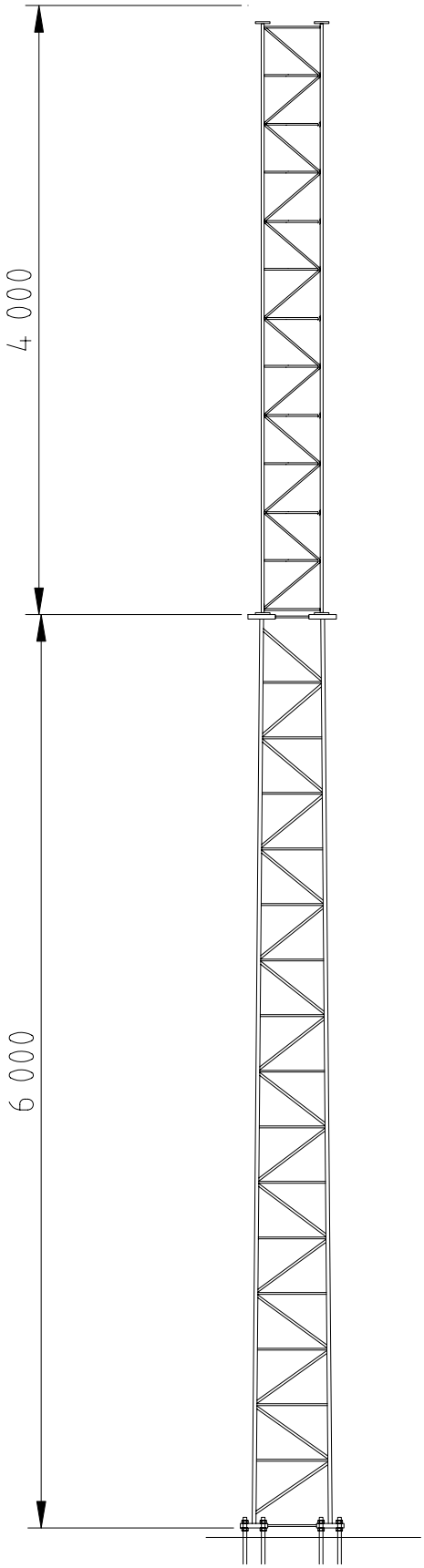

Aerial Oy
Box 22
04401 Järvenpää
Finland
Tel. +358 9 2790 120
Fax +358 9 2910 210
http://www.aerial.fi
aerial@aerial.fi

Triangel 600/28-12

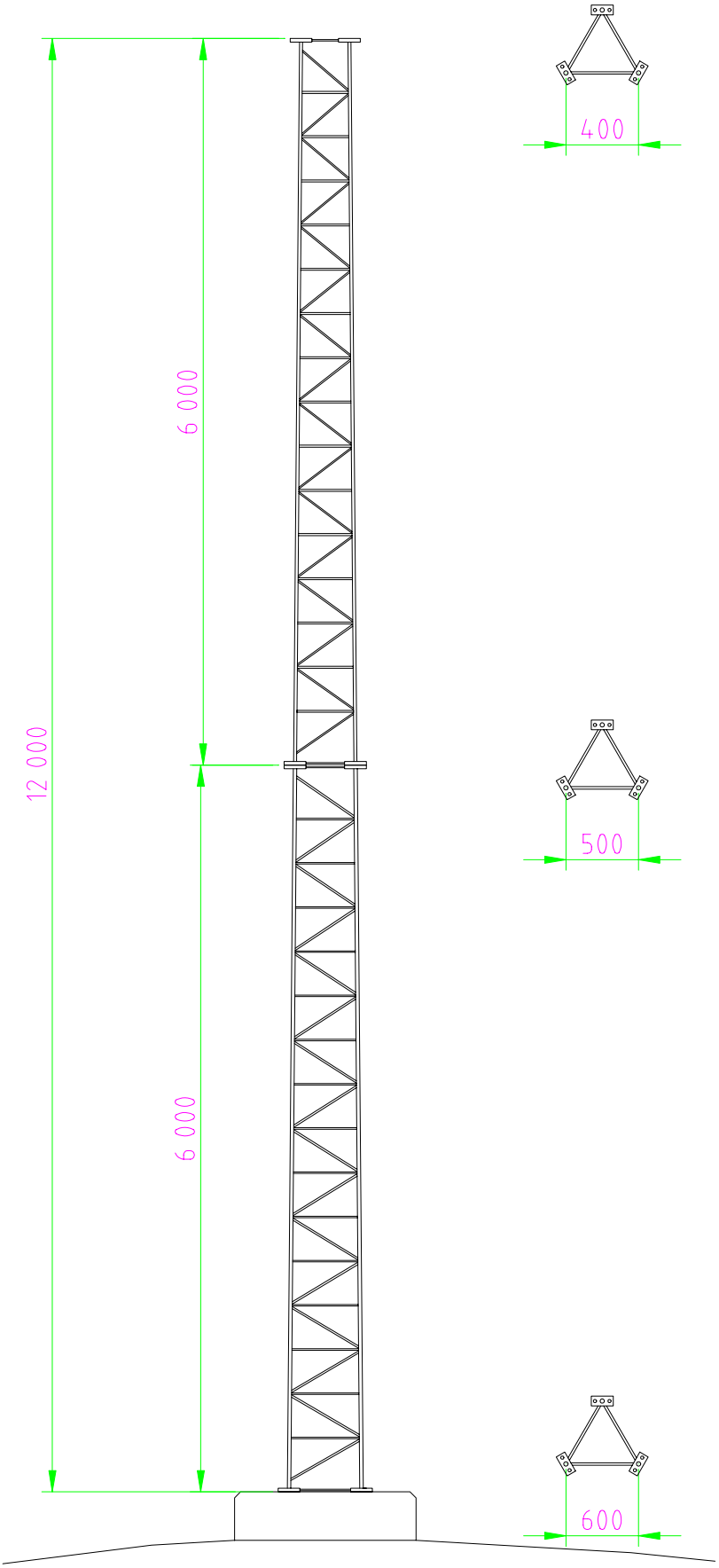

Aerial Oy
Box 22
04401 Järvenpää
Finland
Tel. +358 9 2790 120
Fax +358 9 2910 210
http://www.aerial.fi
aerial@aerial.fi

Triagle 600/28-16-400

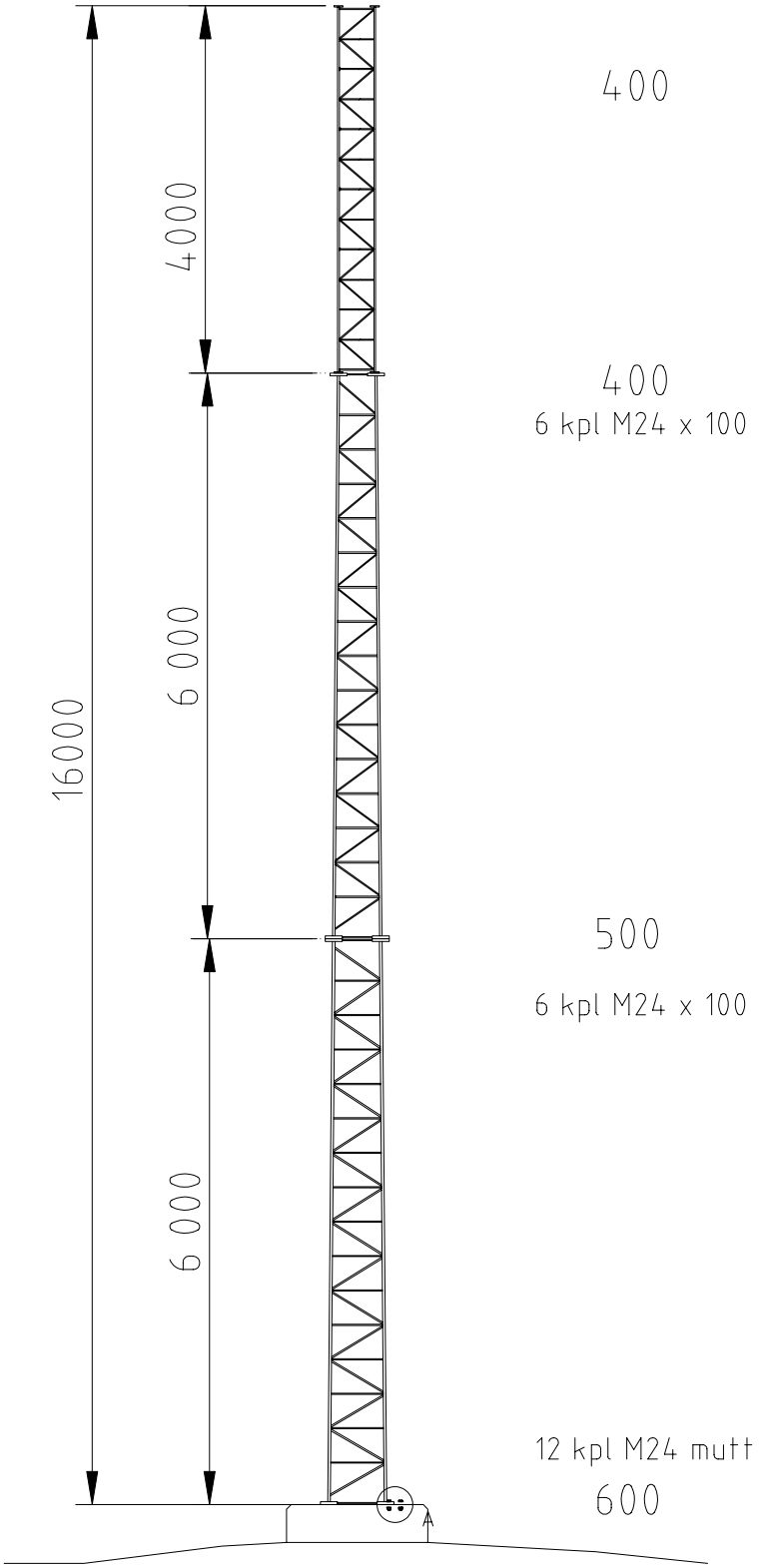

Aerial Oy
Box 22
04401 Järvenpää
Finland
Tel. +358 9 2790 120
Fax +358 9 2910 210
http://www.aerial.fi
aerial@aerial.fi

Triangle 700/35-18

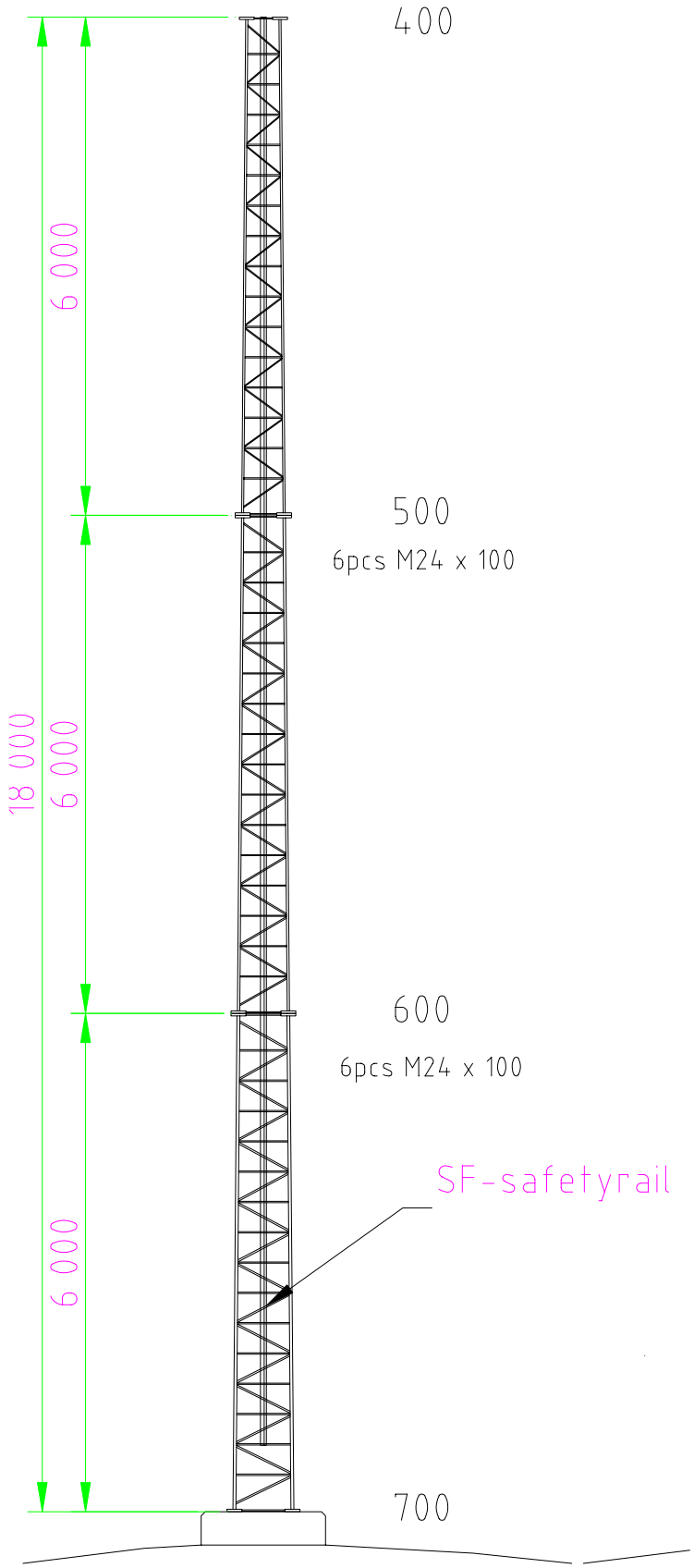

Aerial Oy
Box 22
04401 Järvenpää
Finland
Tel. +358 9 2790 120
Fax +358 9 2910 210
http://www.aerial.fi
aerial@aerial.fi

Triangle 700/35-20-500

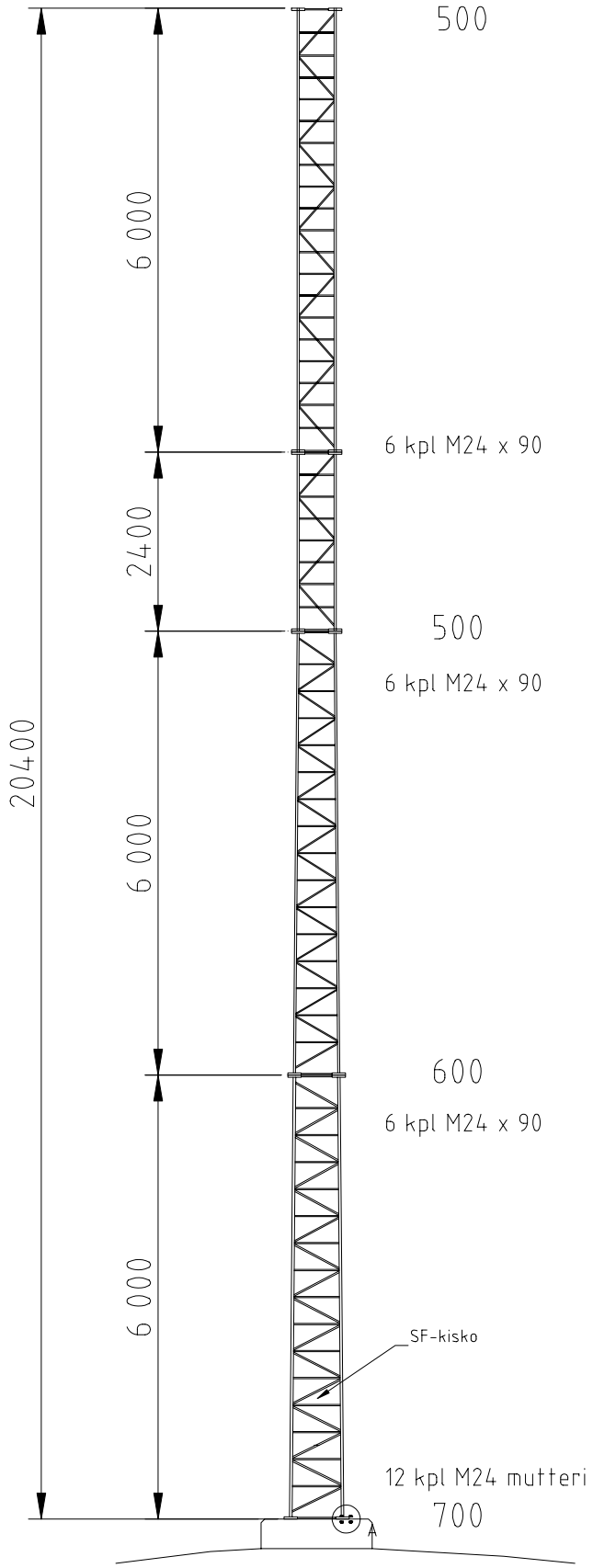

Aerial Oy
Box 22
04401 Järvenpää
Finland
Tel. +358 9 2790 120
Fax +358 9 2910 210
http://www.aerial.fi
aerial@aerial.fi

Triangle 800/38-24-500

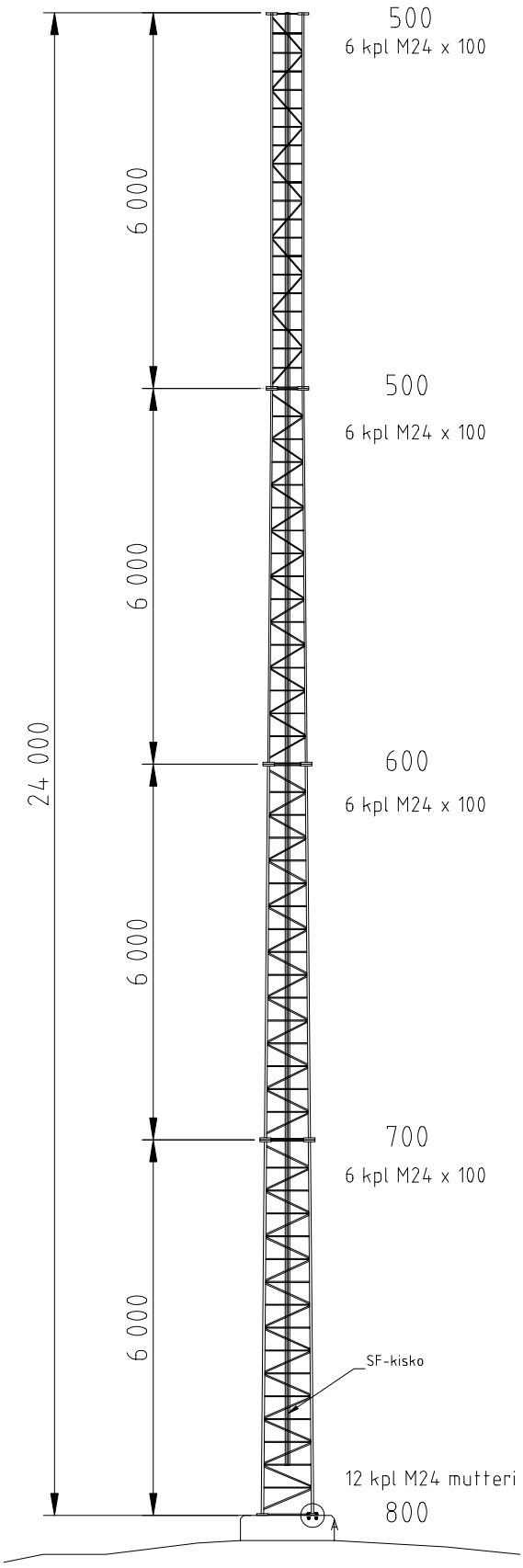

Aerial Oy
Box 22
04401 Järvenpää
Finland
Tel. +358 9 2790 120
Fax +358 9 2910 210
http://www.aerial.fi
aerial@aerial.fi

Triangle 1000/40-30-500

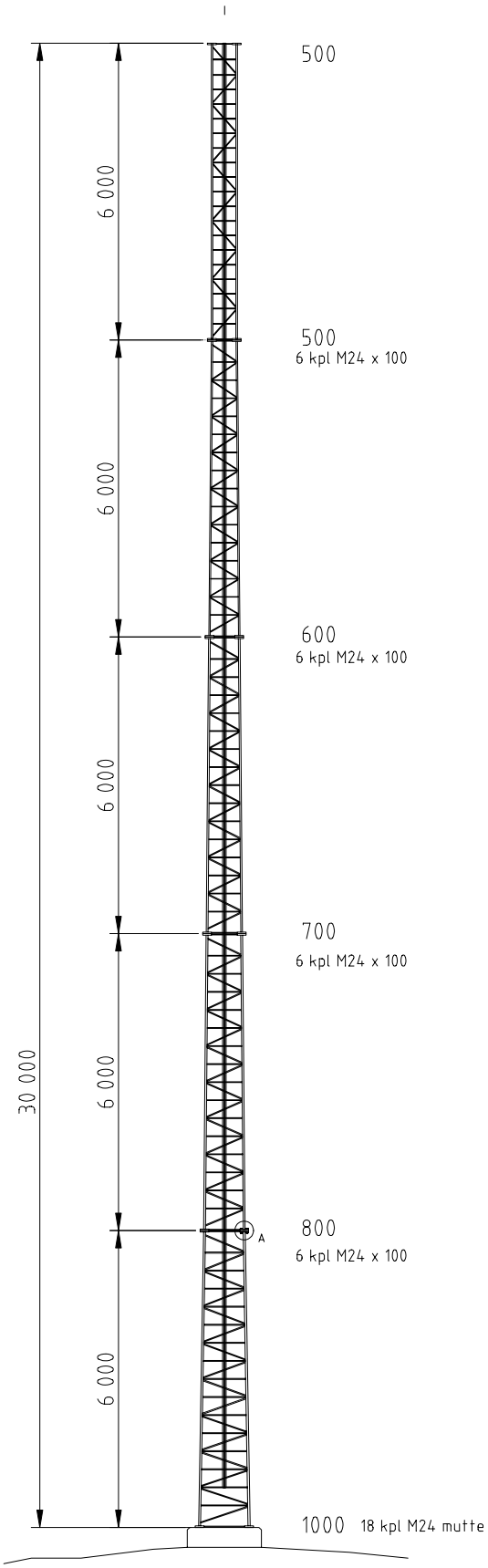

Aerial Oy
Box 22
04401 Järvenpää
Finland
Tel. +358 9 2790 120
Fax +358 9 2910 210
http://www.aerial.fi
aerial@aerial.fi

Triangle 1200/42-30-700

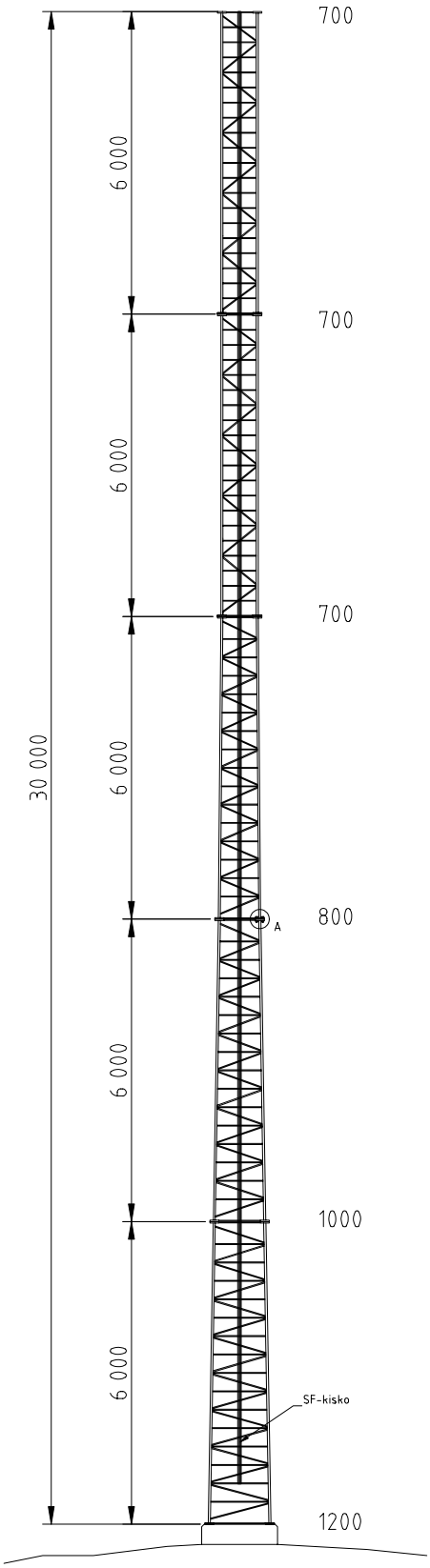

Aerial Oy
Box 22
04401 Järvenpää
Finland
Tel. +358 9 2790 120
Fax +358 9 2910 210
http://www.aerial.fi
aerial@aerial.fi

Triangle 1200-42-36-500

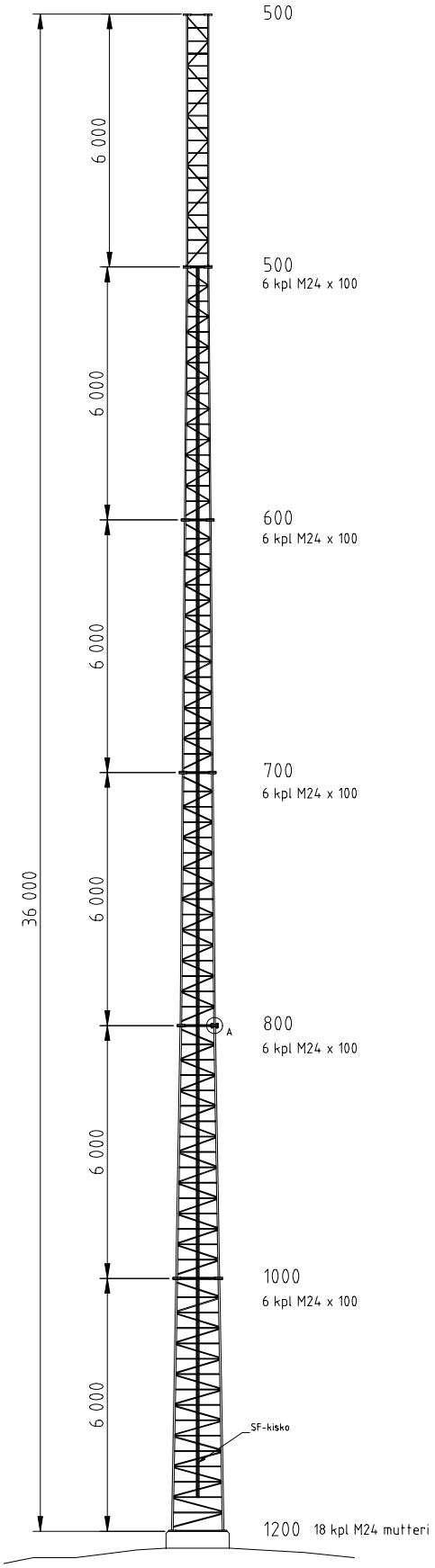

Aerial Oy
Box 22
04401 Järvenpää
Finland
Tel. +358 9 2790 120
Fax +358 9 2910 210
http://www.aerial.fi
aerial@aerial.fi

Triangle 1400/45-36-700

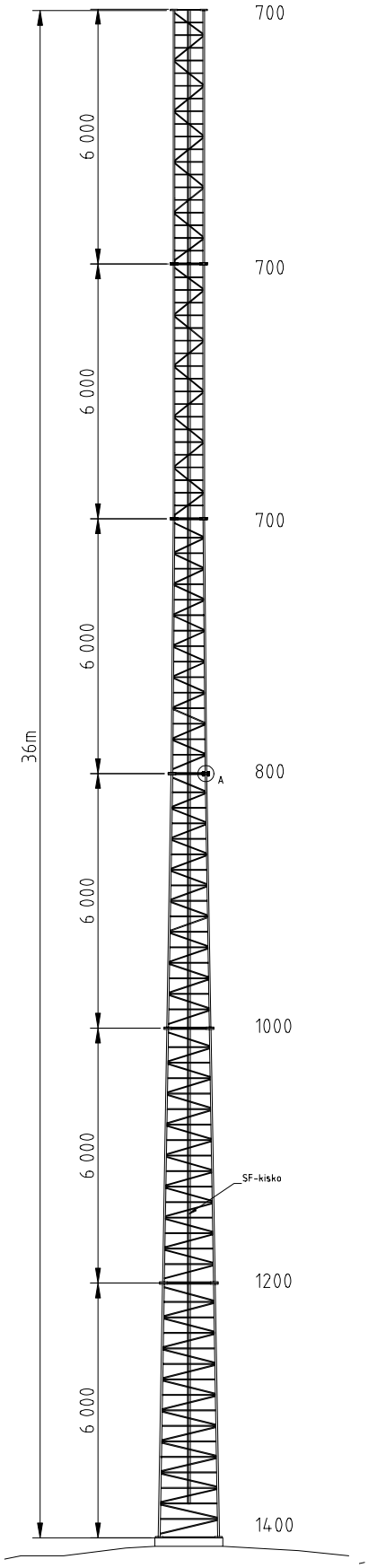

Aerial Oy
Box 22
04401 Järvenpää
Finland
Tel. +358 9 2790 120
Fax +358 9 2910 210
http://www.aerial.fi
aerial@aerial.fi

Triangle 1533/50-40-700

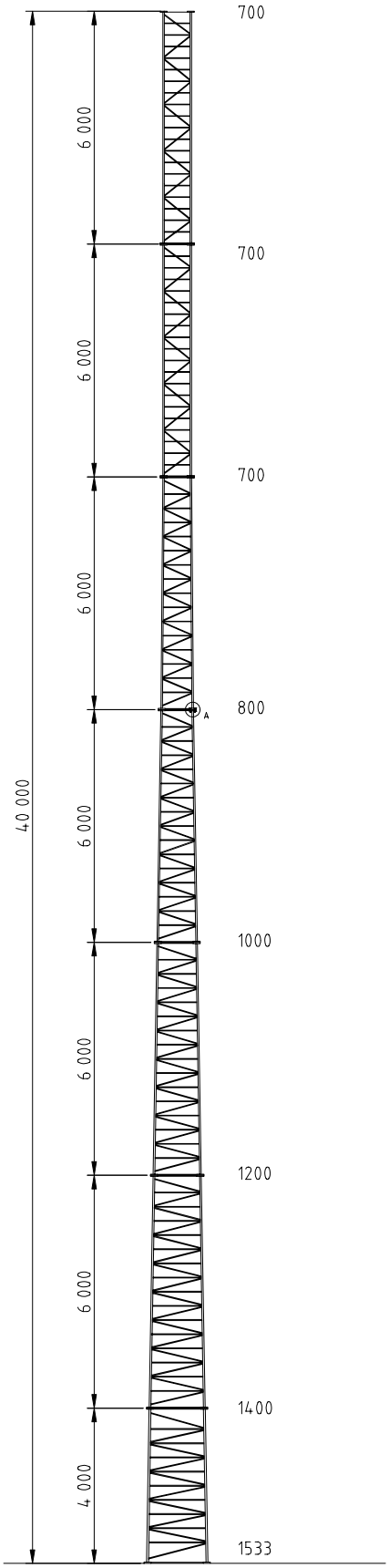

Aerial Oy
Box 22
04401 Järvenpää
Finland
Tel. +358 9 2790 120
Fax +358 9 2910 210
http://www.aerial.fi
aerial@aerial.fi

Triangle 1400/45-42-500

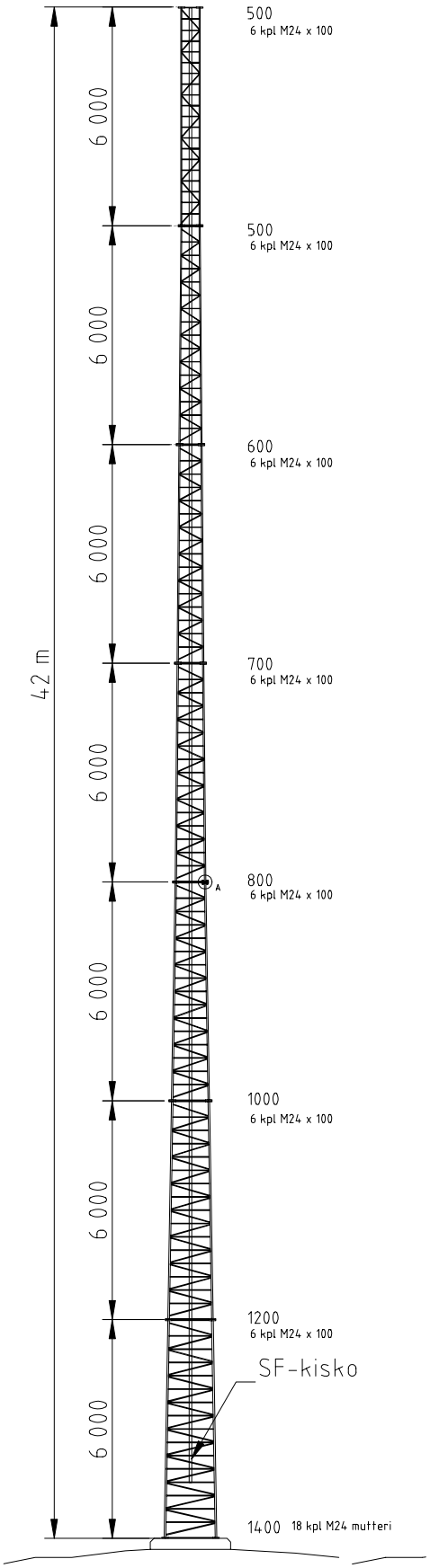

Aerial Oy
Box 22
04401 Järvenpää
Finland
Tel. +358 9 2790 120
Fax +358 9 2910 210
http://www.aerial.fi
aerial@aerial.fi

Triangle 1666/50-44-700

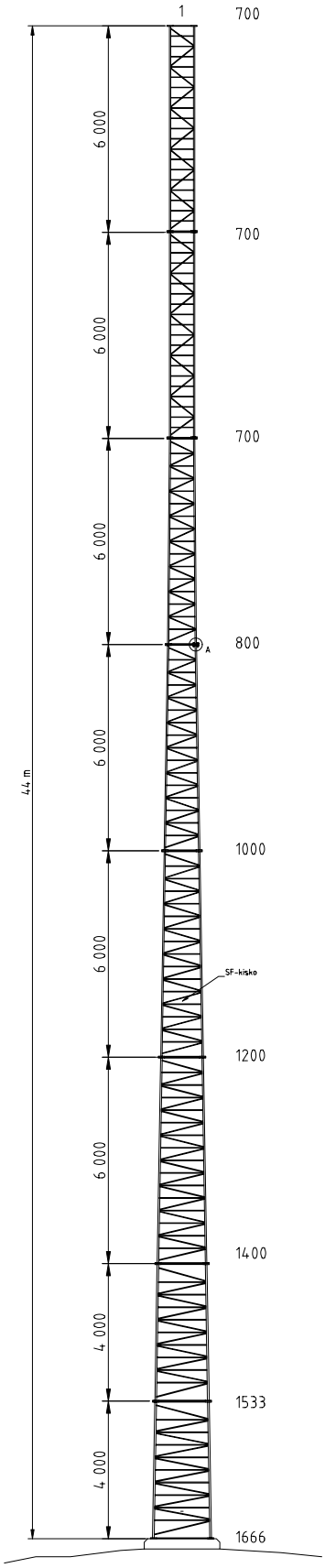

Aerial Oy
Box 22
04401 Järvenpää
Finland
Tel. +358 9 2790 120
Fax +358 9 2910 210
http://www.aerial.fi
aerial@aerial.fi

Triangle 1666/50-50-700

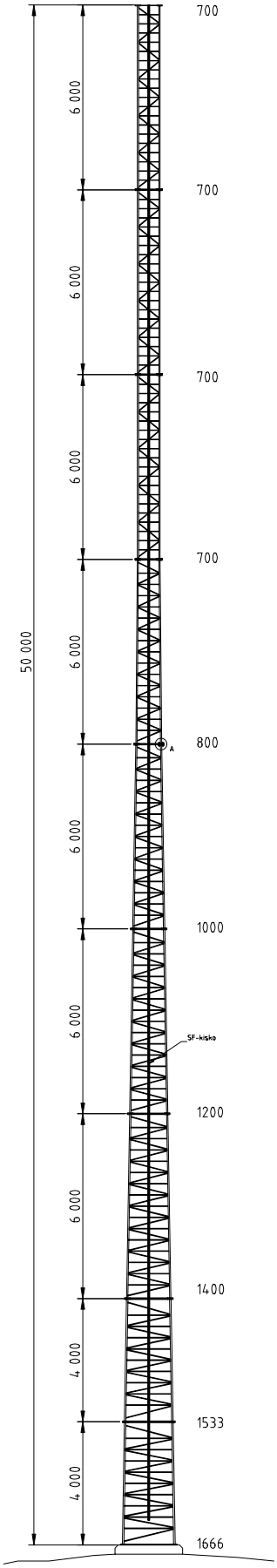

Aerial Oy
Box 22
04401 Järvenpää
Finland
Tel. +358 9 2790 120
Fax +358 9 2910 210
http://www.aerial.fi
aerial@aerial.fi

Triangle 3200/89-50-800

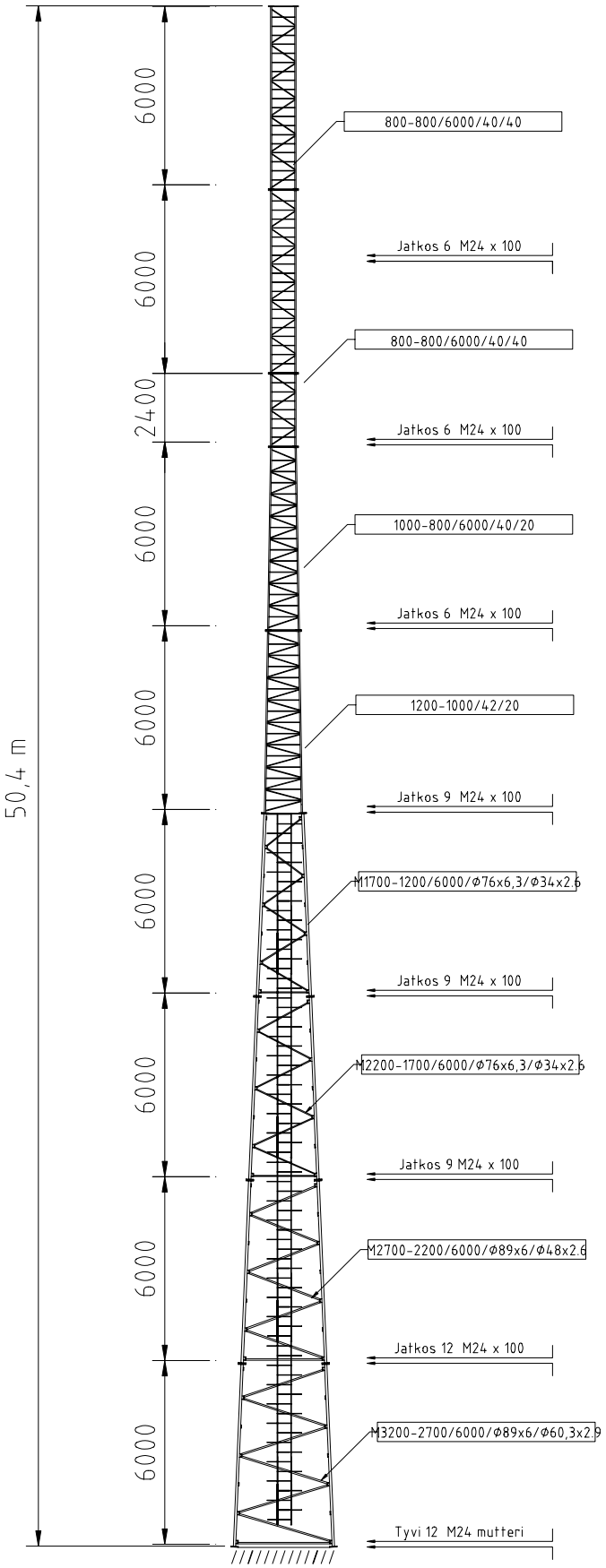

Aerial Oy

Box 22
04401 Järvenpää
Finland

Tel. +358 9 2790 120
Fax +358 9 2910 210

http://www.aerial.fi
aerial@aerial.fi

Triangle 4200/101-60-800

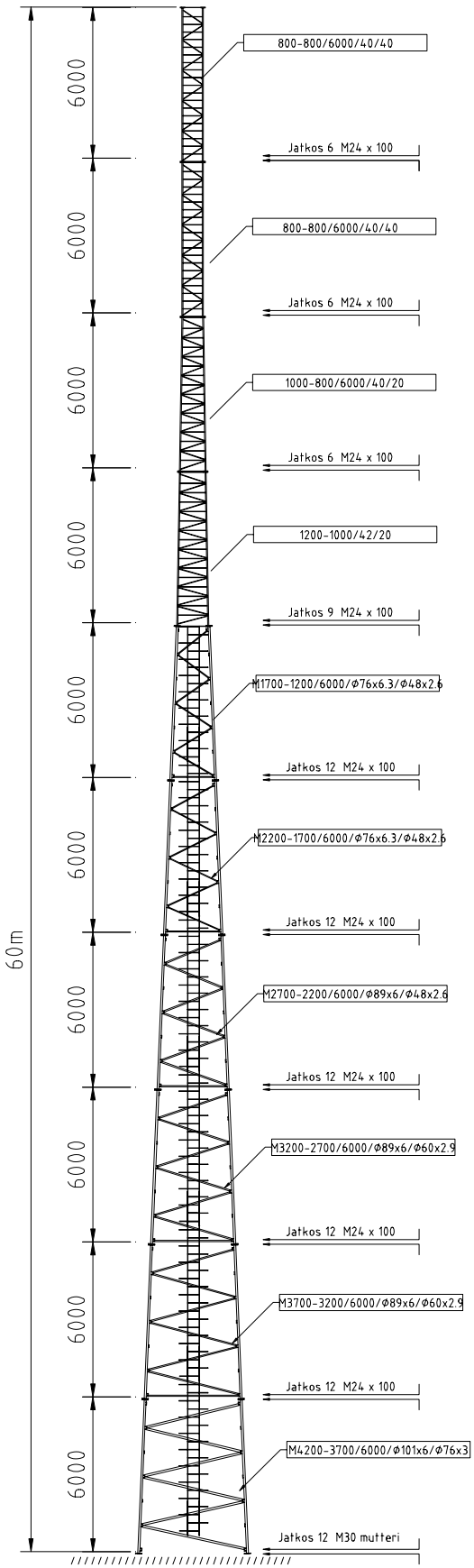

Aerial Oy

Box 22
04401 Järvenpää
Finland

Tel. +358 9 2790 120
Fax +358 9 2910 210

http://www.aerial.fi
aerial@aerial.fi

Triagle 4700/101-66-800

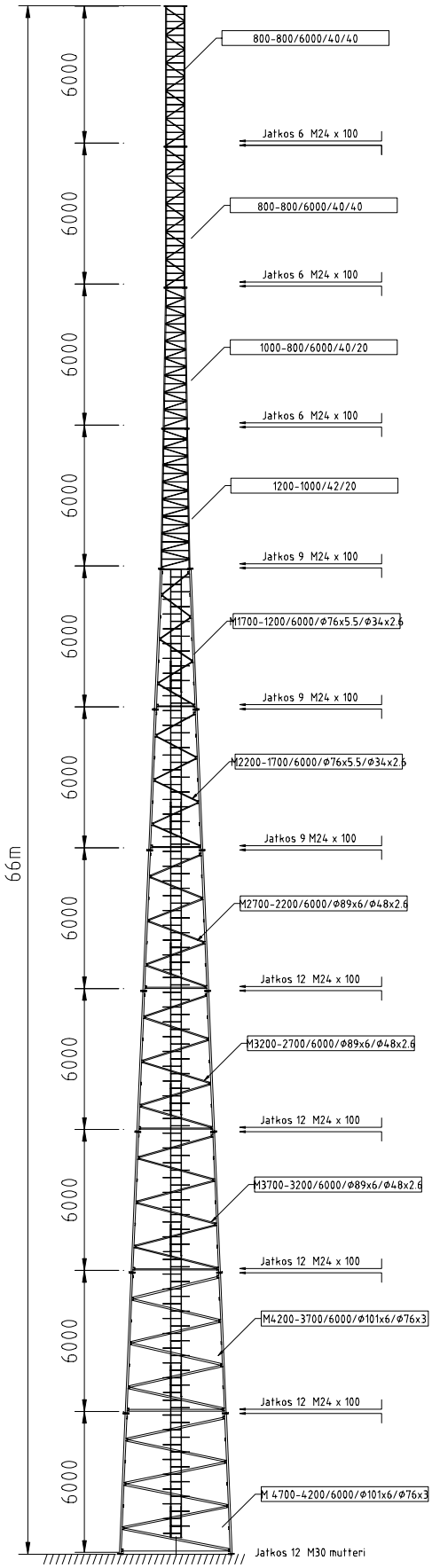

Aerial Oy
Box 22
04401 Järvenpää
Finland
Tel. +358 9 2790 120
Fax +358 9 2910 210
http://www.aerial.fi
aerial@aerial.fi

Triangle 5200/114-75-800

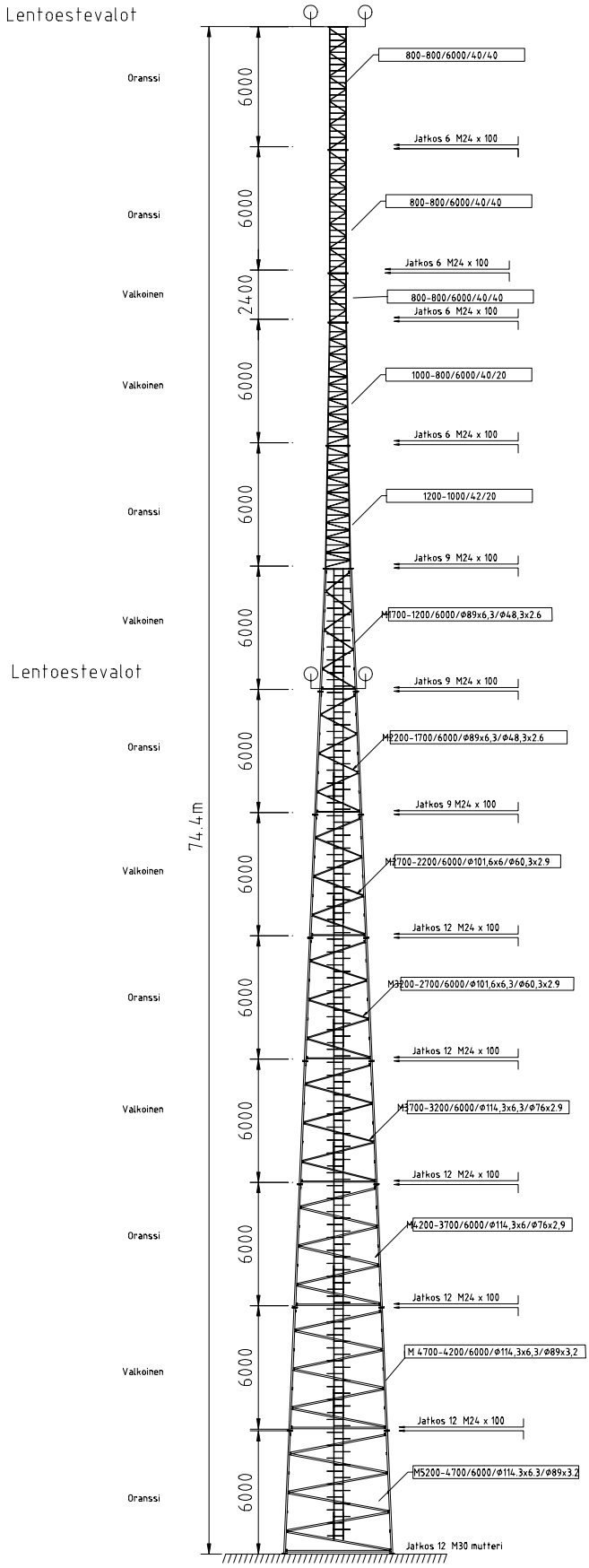

Aerial Oy

Box 22
04401 Järvenpää
Finland

Tel. +358 9 2790 120
Fax +358 9 2910 210

http://www.aerial.fi
aerial@aerial.fi

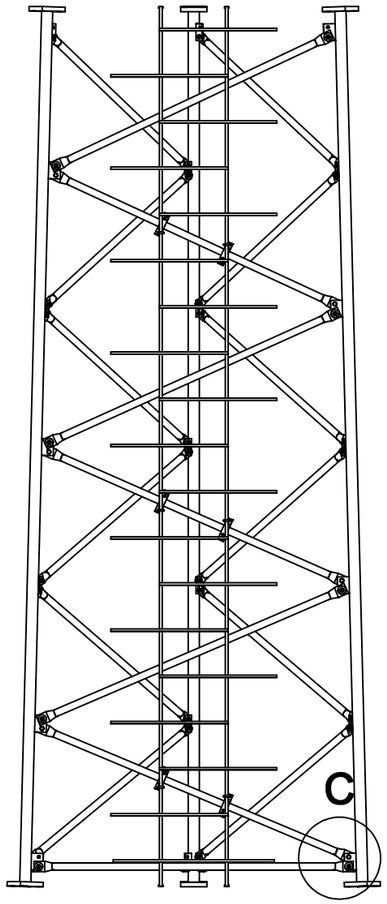

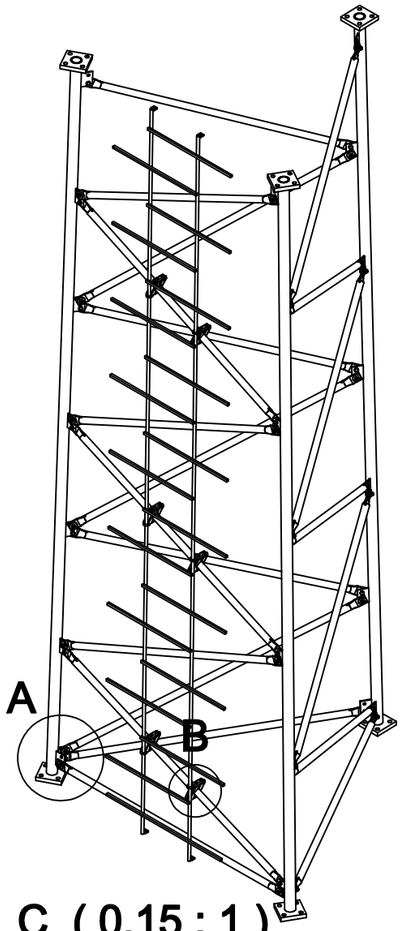

A (0,15 : 1)

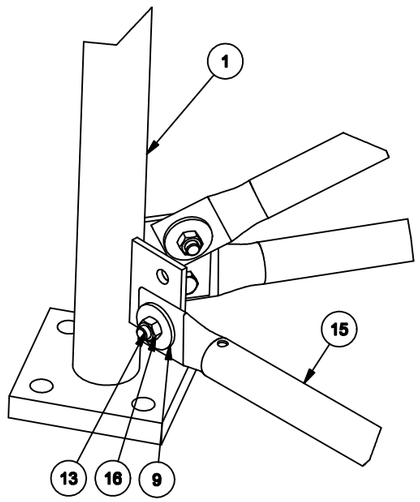

B (0,15 : 1)

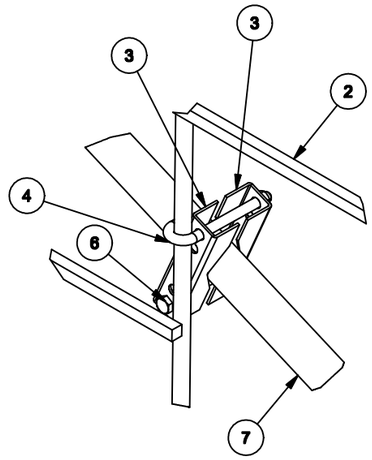

C (0,15 : 1)

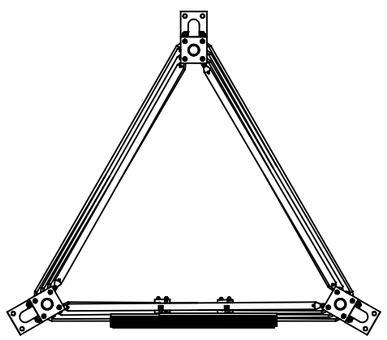

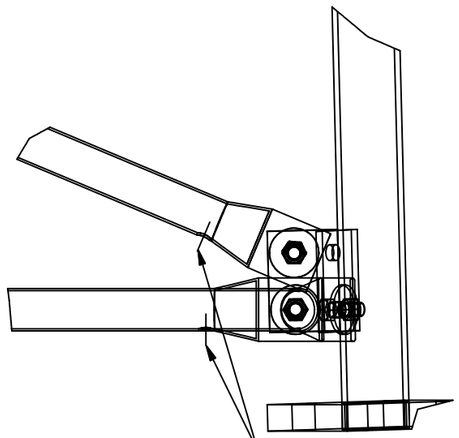

VERY IMPORTANT!!

INSTALL THE DIAGONALS AND HORIZONTALS SO THAT THE WATER DRAIN HOLE IS AT THE LOWER END OF THE BEAM AND IT FACES DOWNWARDS.

Rev	Description	Name	Date

1	Leg	76mm		3
2	Ladder	l=6000mm		1
3	U40-160L	mounting clamp		12
4	J-hook	M12		6
5	Hex nut	DIN 934 - M12	DIN 934	12
6	Hex bolt	DIN 931-1 - M12 x 110	DIN 931-1	6
7	Diagonal	48.3x2.6		3
8	Diagonal	48.3x2.6		3
9	Washer	DIN 440 - A 17	DIN 440	42
10	Diagonal	48.3x2.6		3
11	Diagonal	48.3x2.6		3
12	Diagonal	48.3x2.6		3
13	Hex bolt	DIN 7990 - M16 x 40	DIN 7990	42
14	Diagonal	48.3x2.6		3
15	Horizontal	48.3x2.6		3
16	Hex nut	DIN 934 - M16	DIN 934	42

Untoleranced dimensions	Hitsatut rakenteet SFS 3393, DIN 8570		
Coating	Kuumasinkitys SFS-EN 12329	Color	
Status: WorkInProgress		Product: MAst	Weight: 308,0 kg
Designer: 27.10.2004 APT/Aerial	Scale: 1:40	Associated with: Empower M2300-76-40-800	Part n:o: M2300-76-6-v2
Check.			Replacement
Aerial Oy		Description: Element Assembly	Drawing n:o
Model: M2300-76-6-v2.iam		Drawing: M2300-76-6-v2.idw	Page 1 / 2 Size A3

Pietolanlahti 9A, 04401 Järvenpää, FINLAND
tel. +358 9 27601 30, fax +358 9 2910 210
www.aerial.fi

Triangle 3200/89-42-1200

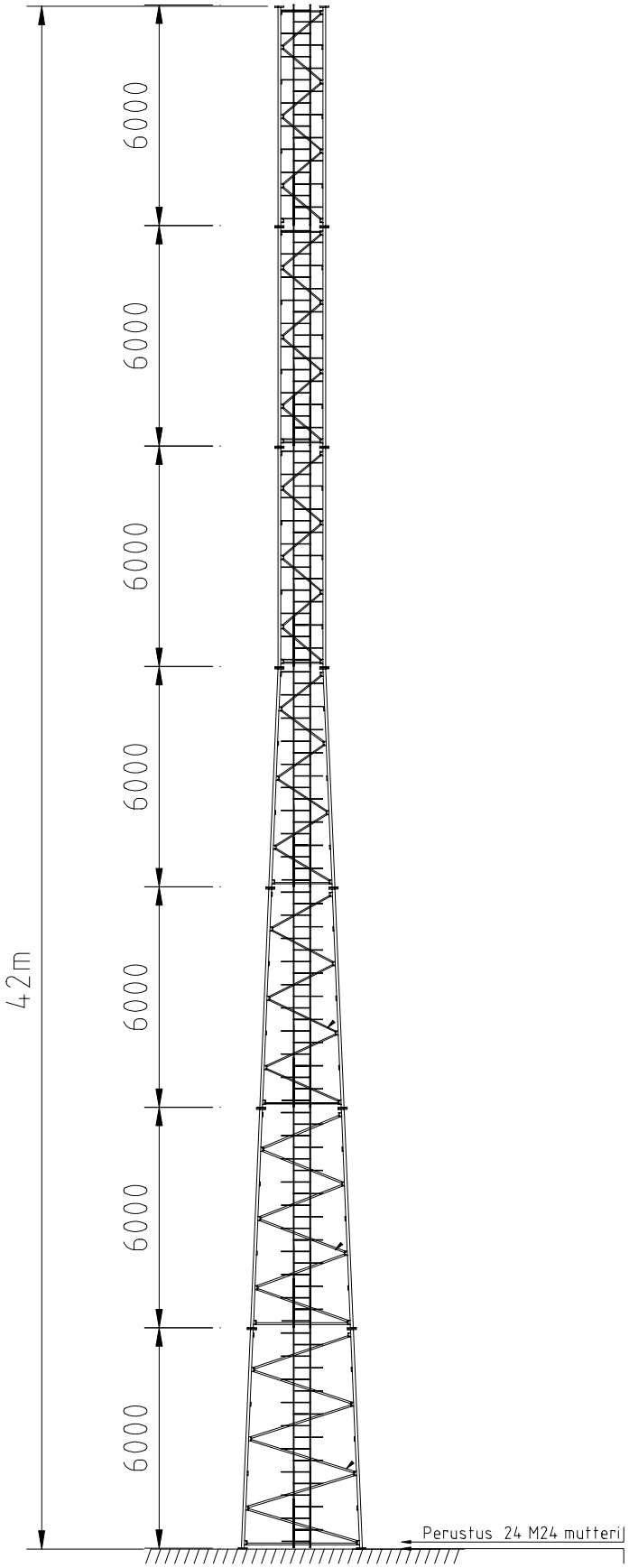

Aerial Oy
Box 22
04401 Järvenpää
Finland
Tel. +358 9 2790 120
Fax +358 9 2910 210
http://www.aerial.fi
aerial@aerial.fi

Triangle 4200/101-54-1200

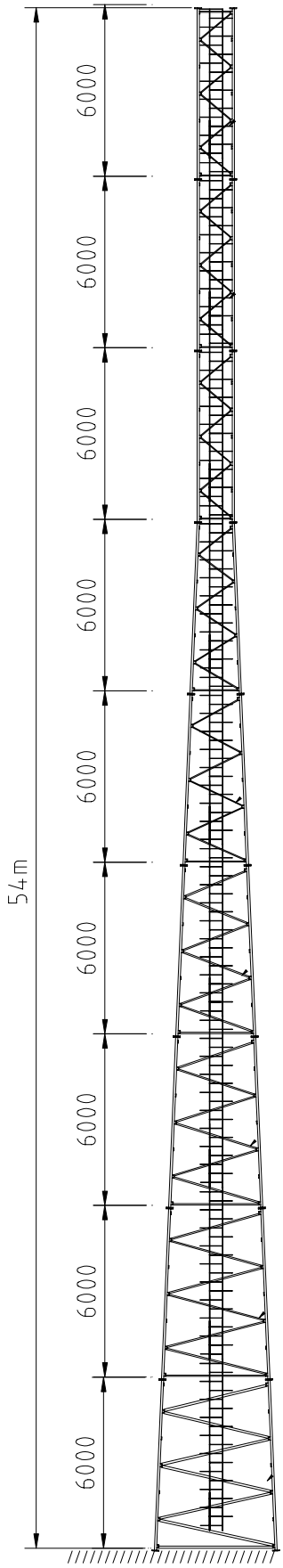

Aerial Oy
Box 22
04401 Järvenpää
Finland
Tel. +358 9 2790 120
Fax +358 9 2910 210
http://www.aerial.fi
aerial@aerial.fi

Triangle 4700/101-60-1200

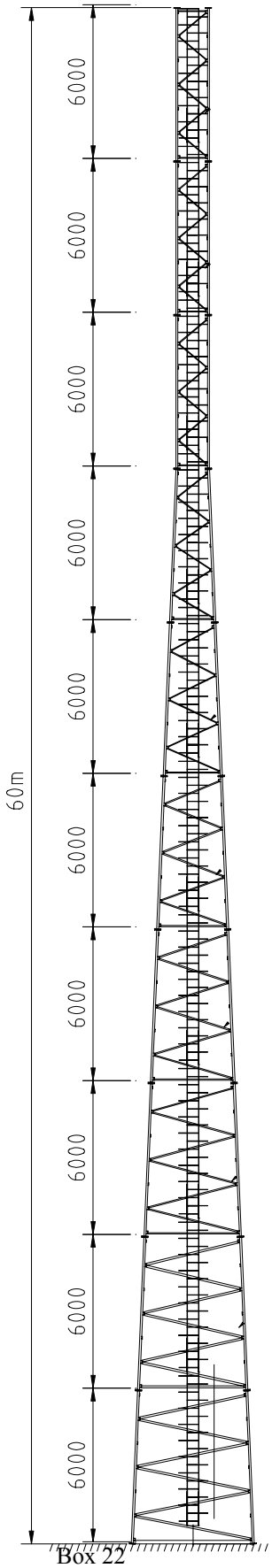

Aerial Oy
Box 22
04401 Järvenpää
Finland
Tel. +358 9 2790 120
Fax +358 9 2910 210
http://www.aerial.fi
aerial@aerial.fi

Triangle 700/35-20-500

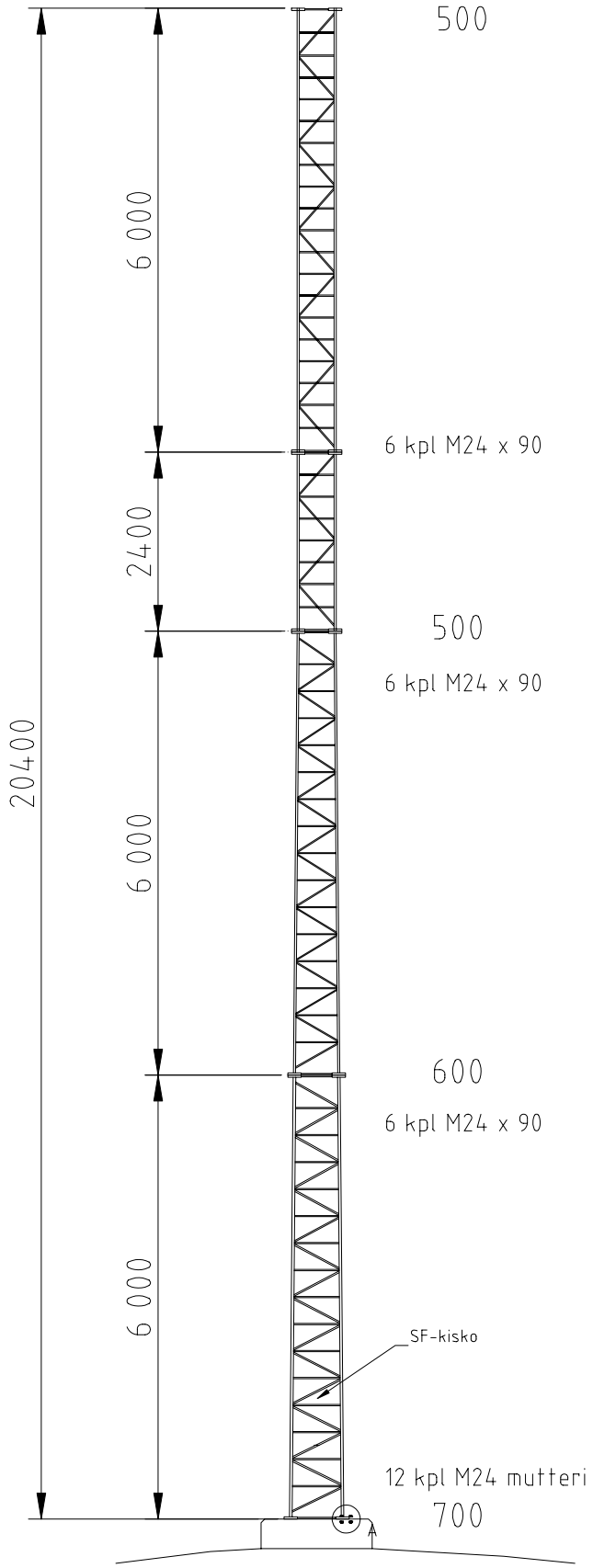

Aerial Oy
Box 22
04401 Järvenpää
Finland
Tel. +358 9 2790 120
Fax +358 9 2910 210
http://www.aerial.fi
aerial@aerial.fi

Triangle 800/38-24-500

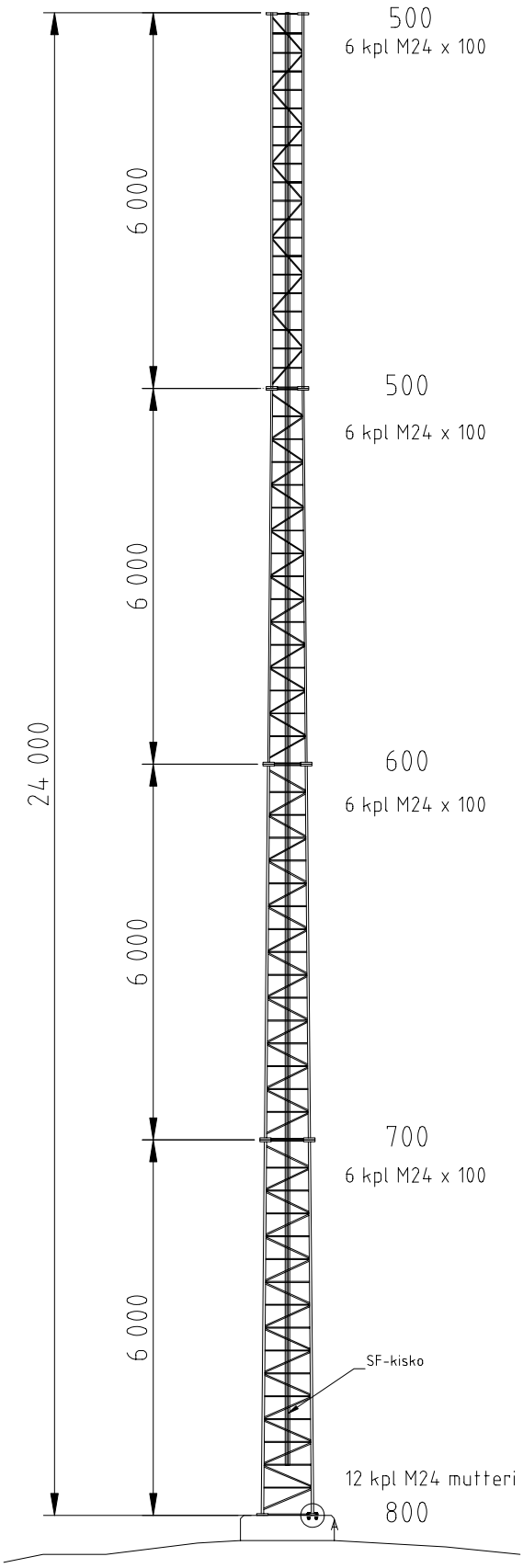

Aerial Oy
Box 22
04401 Järvenpää
Finland
Tel. +358 9 2790 120
Fax +358 9 2910 210
http://www.aerial.fi
aerial@aerial.fi

Triangle 1000/40-30-500

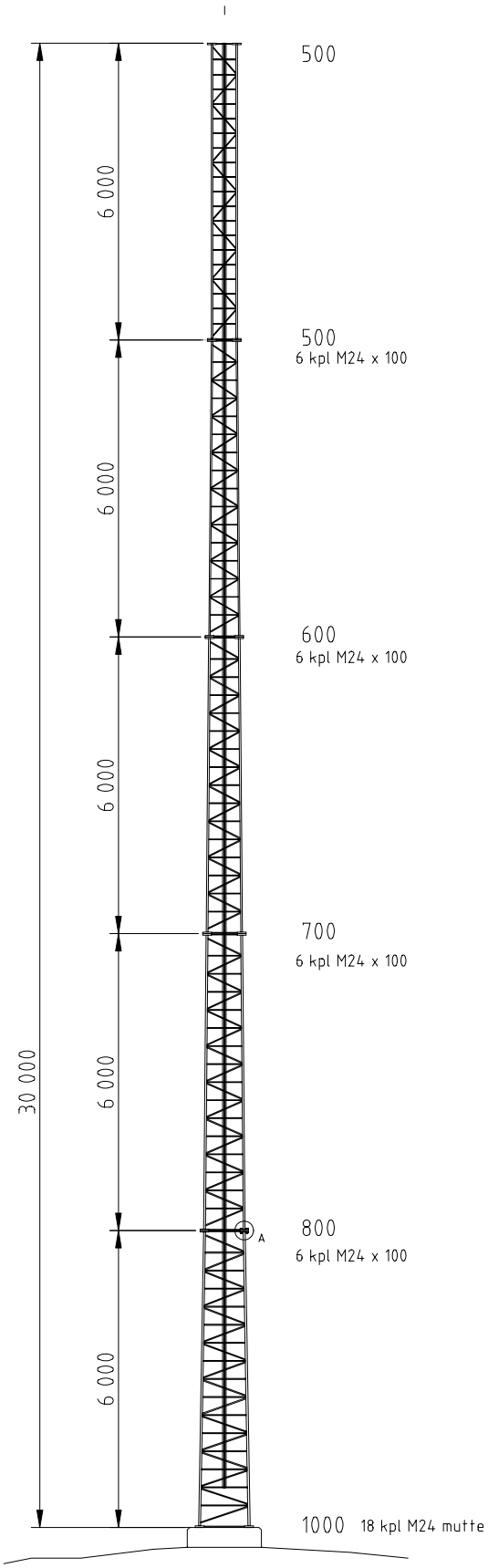

Aerial Oy
Box 22
04401 Järvenpää
Finland
Tel. +358 9 2790 120
Fax +358 9 2910 210
http://www.aerial.fi
aerial@aerial.fi

Round hollow shaft steel masts

General

Typical capacity: 12 m²
Height: up to 66 m

Design standards

Finnish "Masto-ohje 1980" and international standards BS, DIN and EIA

Mast data

Mast width: 4400 mm (base)
Cross-section: Triangular
Legs: RHS steel Fe52D
Diagonals/horizontal bars: Fe37
Construction: Bolted
Bolts: Hexagon DIN 7990 M24, strength class 8.8
Nuts: Hexagon DIN 934
Washers: Plain DIN 7989

Surface finishing

Hot dip galvanizing according to international SFS-EN ISO 1461A standard. Minimum zinc layer thickness is 100 µm. Obstruction painting comes as an option.

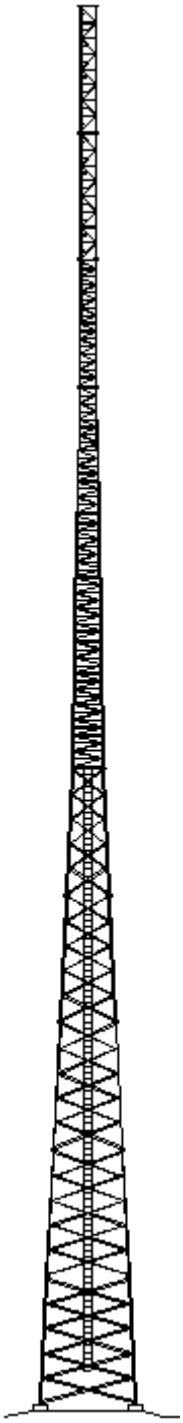

L-profile masts

General

Typical capacity: 35 m²
Height: up to 68 m

Design standards

Finnish "Masto-ohje 1980" and international standards BS, DIN and EIA

Mast data

Mast width: 4000 mm (base)
Cross-section: Quadrantal
Legs: L-profile steel Fe52D
Diagonals/horizontal bars: Fe37
Construction: Bolted
Bolts: Hexagon DIN 7990 M24, strength class 8.8
Nuts: Hexagon DIN 934
Washers: Plain DIN 7989

Surface finishing

Hot dip galvanizing according to international SFS-EN ISO 1461A standard. Minimum zinc layer thickness is 100 µm. Obstruction painting comes as an option.

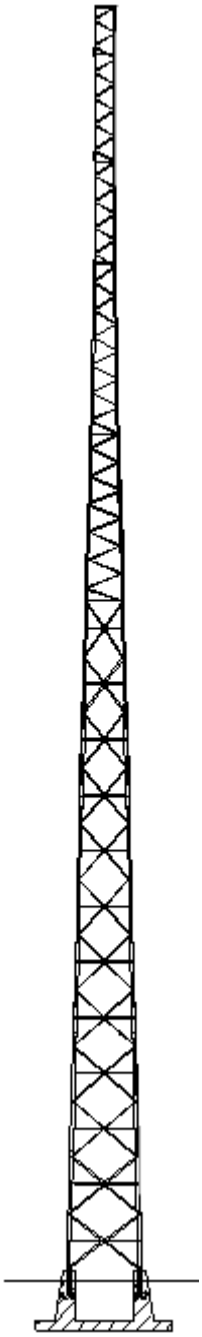

L-profile square tower
2700/140-40

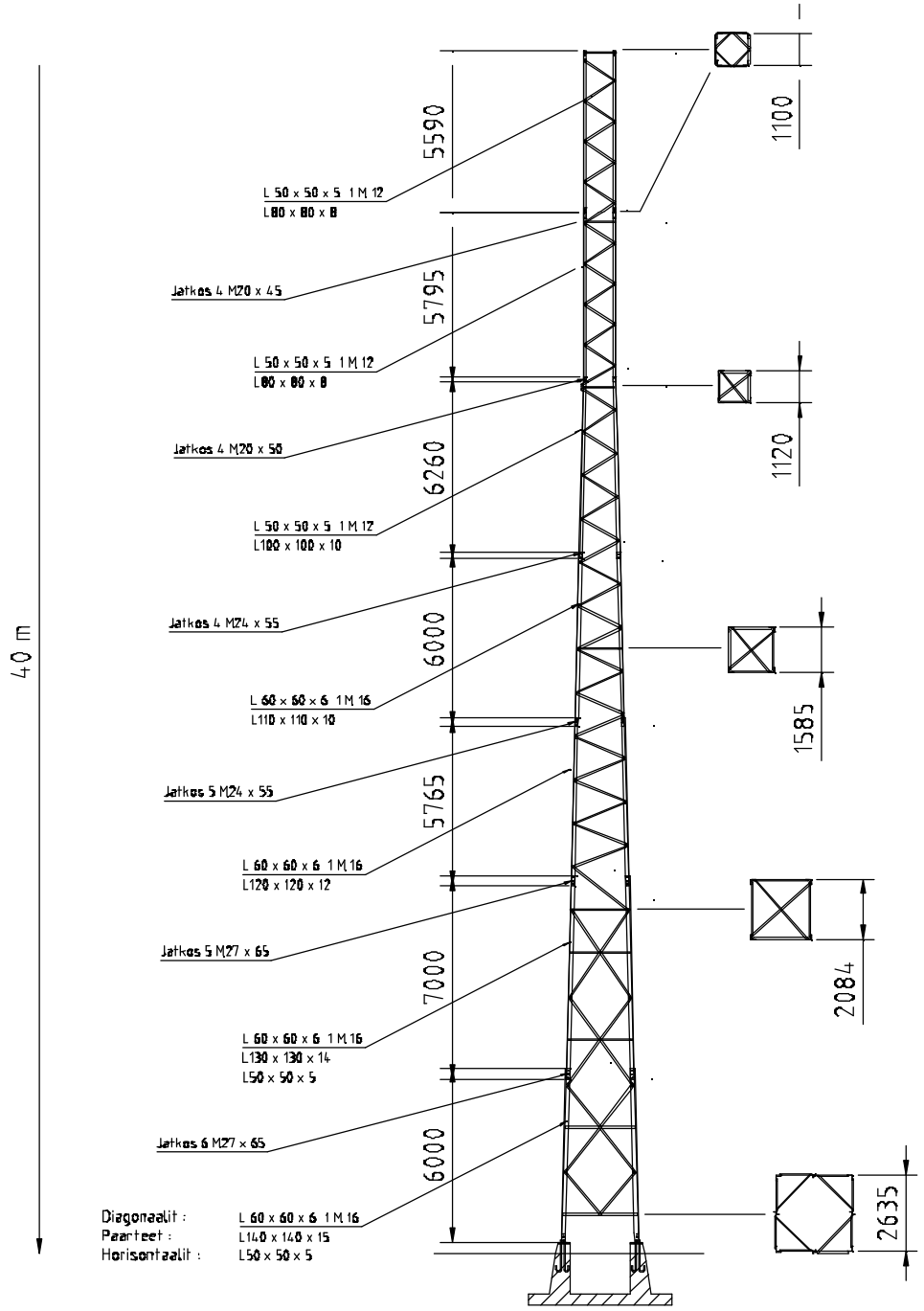

Max wind area	30 m2
Operational wind	20 m/s
Survival wind	45 m/s
Application	BTS, icy conditions

Aerial Oy
Box 22
04401 Järvenpää
Finland
Tel. +358 9 2790 120
Fax +358 9 2910 210
http://www.aerial.fi
aerial@aerial.fi

L-profile square tower
3000/150-50

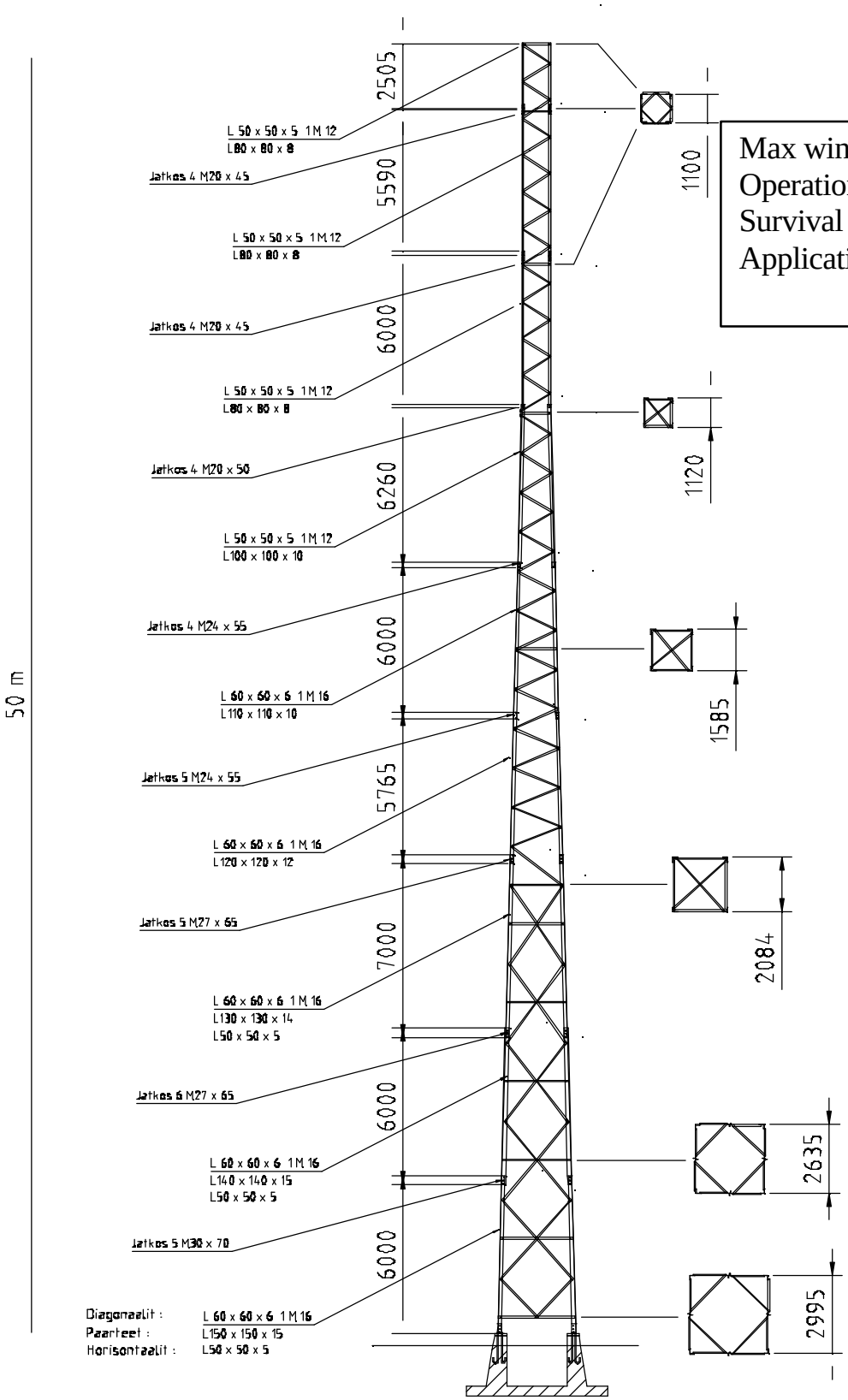

Max wind area	30 m2
Operational wind	20 m/s
Survival wind	45 m/s
Application	BTS
	icy conditions

Aerial Oy
Box 22
04401 Järvenpää
Finland
Tel. +358 9 2790 120
Fax +358 9 2910 210
http://www.aerial.fi
aerial@aerial.fi

L-profile square tower
3700/180-60

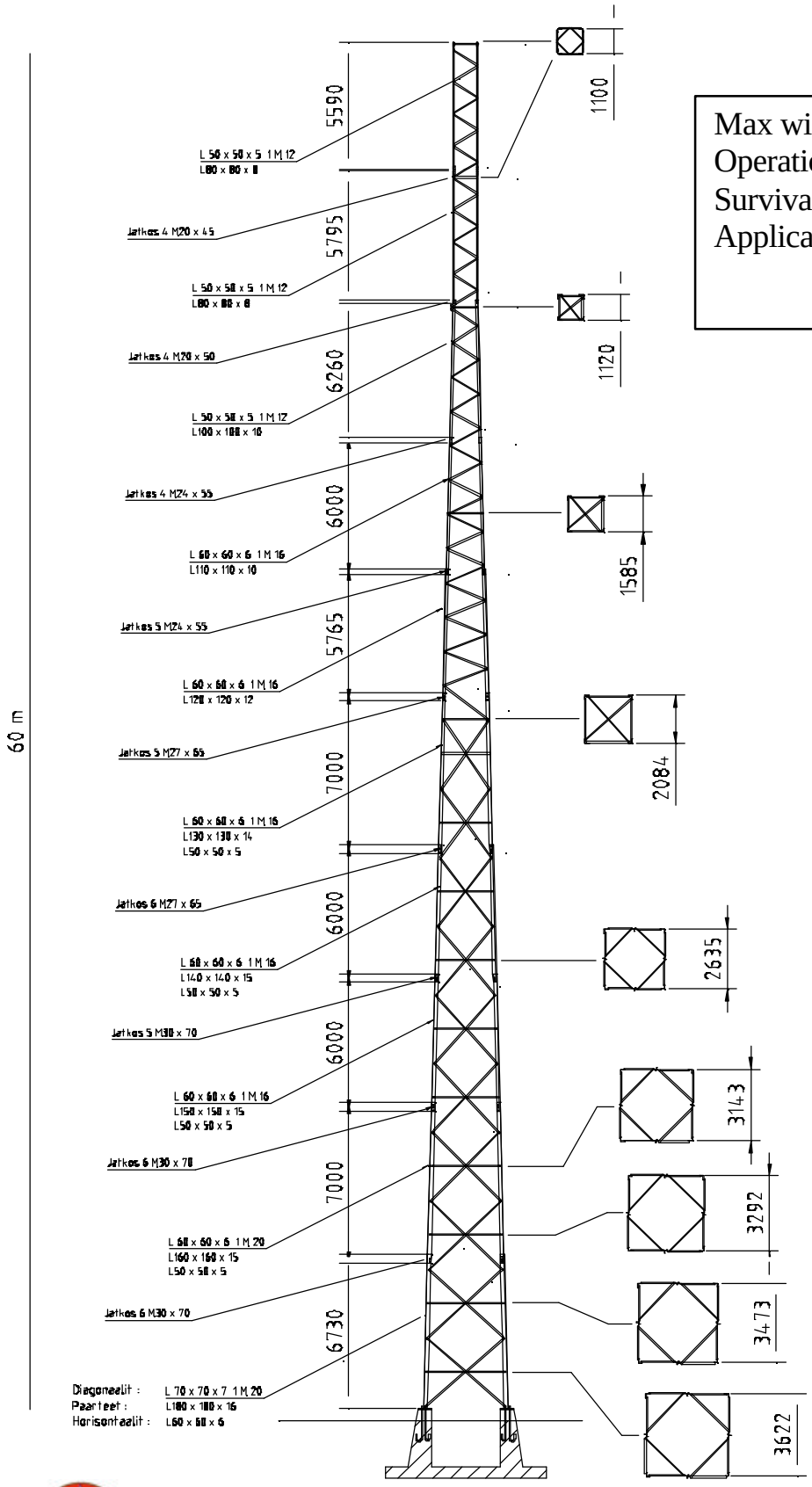

Max wind area	30 m2
Operational wind	20 m/s
Survival wind	45 m/s
Application	BTS
	Icy conditions

Aerial Oy
Box 22
04401 Järvenpää
Finland
Tel. +358 9 2790 120
Fax +358 9 2910 210
http://www.aerial.fi
aerial@aerial.fi

L-profile square tower
4000/200-68

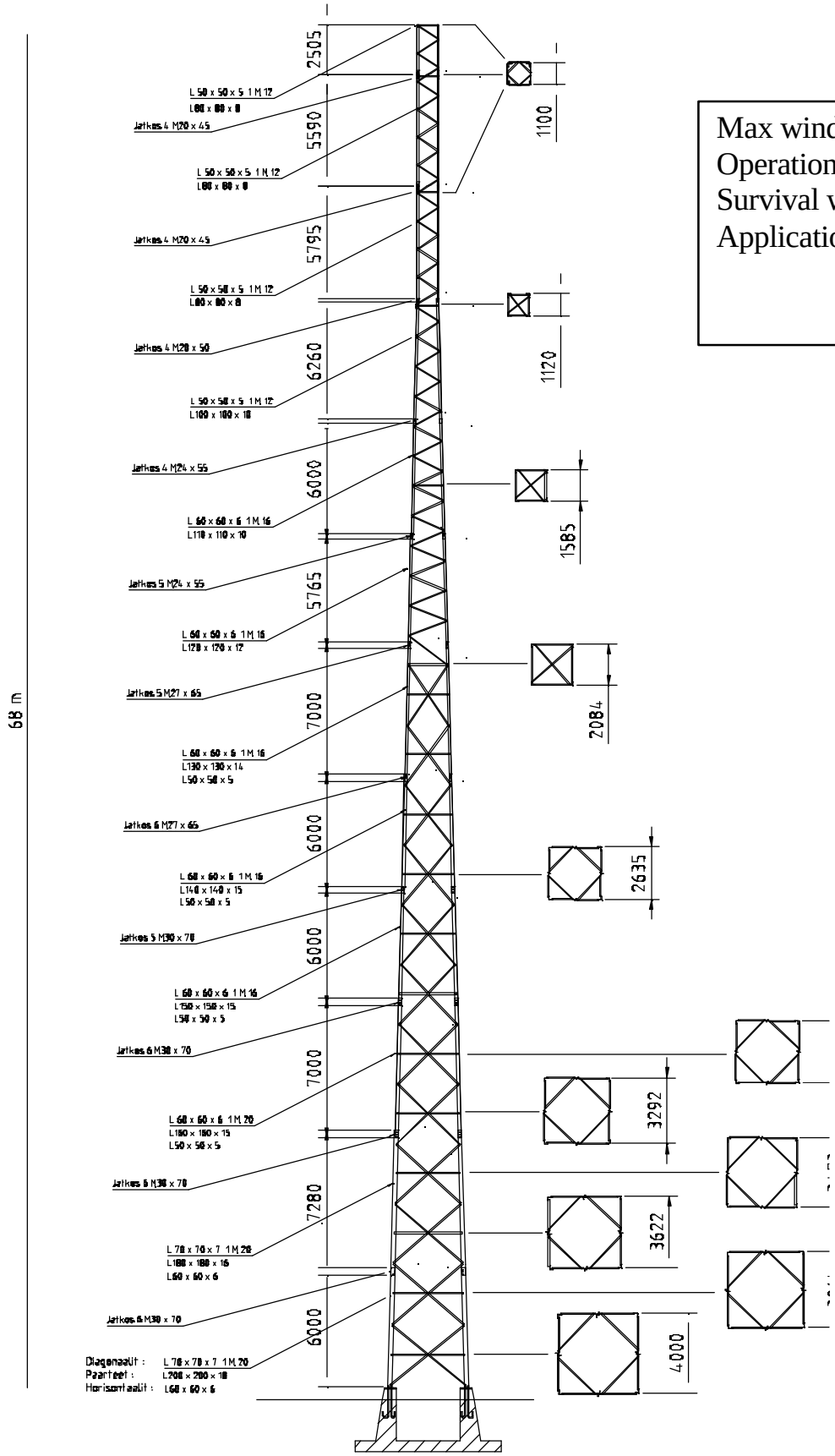

Max wind area	30 m2
Operational wind	20 m/s
Survival wind	45 m/s
Application	BTS, icy conditions

Aerial Oy
Box 22
04401 Järvenpää
Finland
Tel. +358 9 2790 120
Fax +358 9 2910 210
http://www.aerial.fi
aerial@aerial.fi

Tower1000/xx-30 square

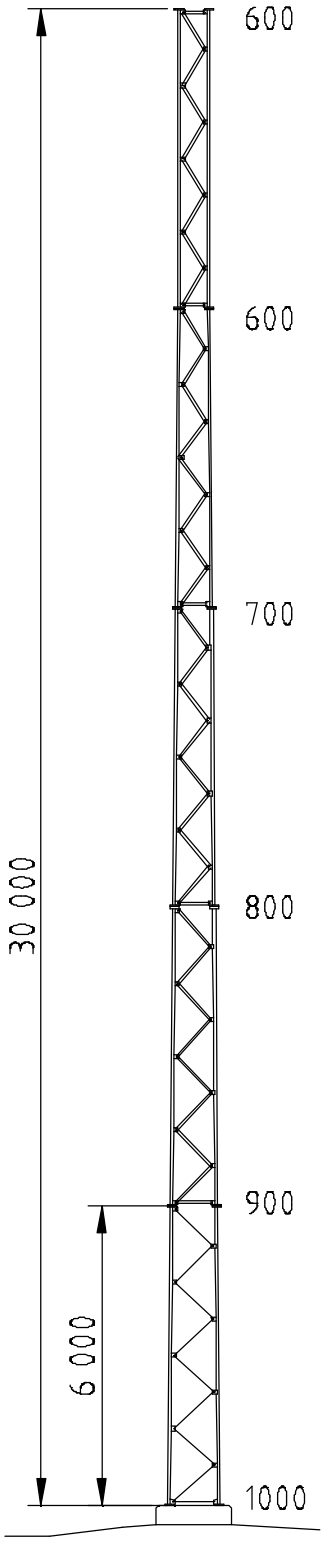

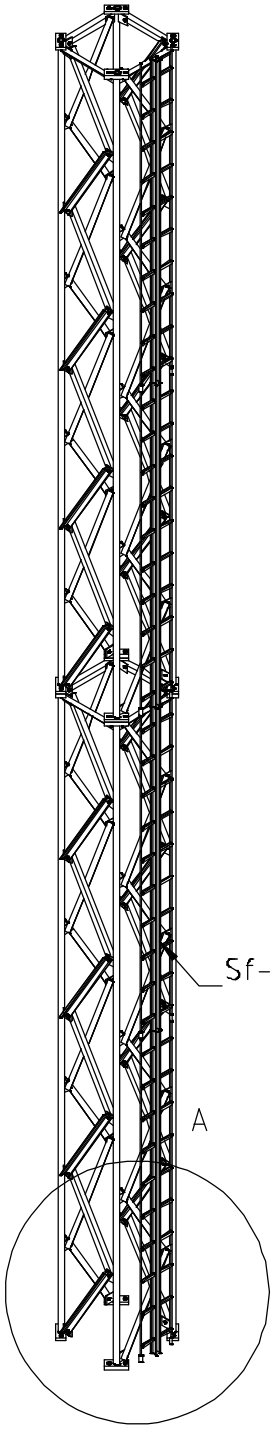

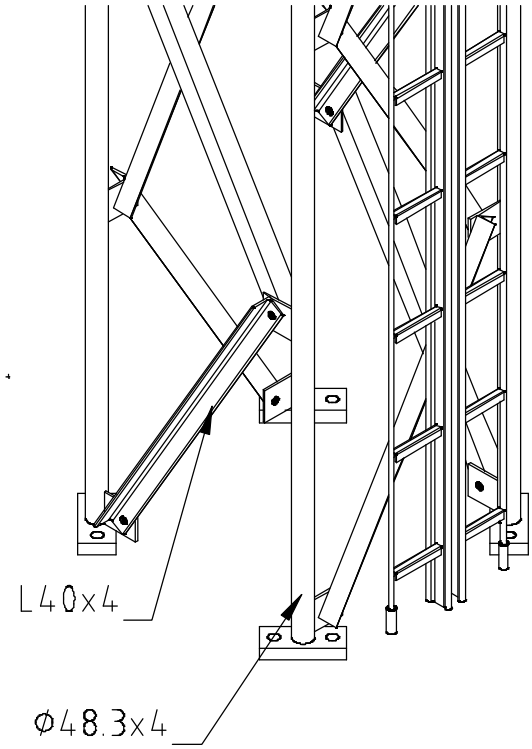

Max wind area	8 m2
Operational wind	15 m/s
Survival wind	45 m/s
Application	BTS
Max lenght	50 m
Leg	diam. 48,3…76,1

Aerial Oy
Box 22
04401 Järvenpää
Finland
Tel. +358 9 2790 120
Fax +358 9 2910 210
http://www.aerial.fi
aerial@aerial.fi

MAST 8800/89-72-1400

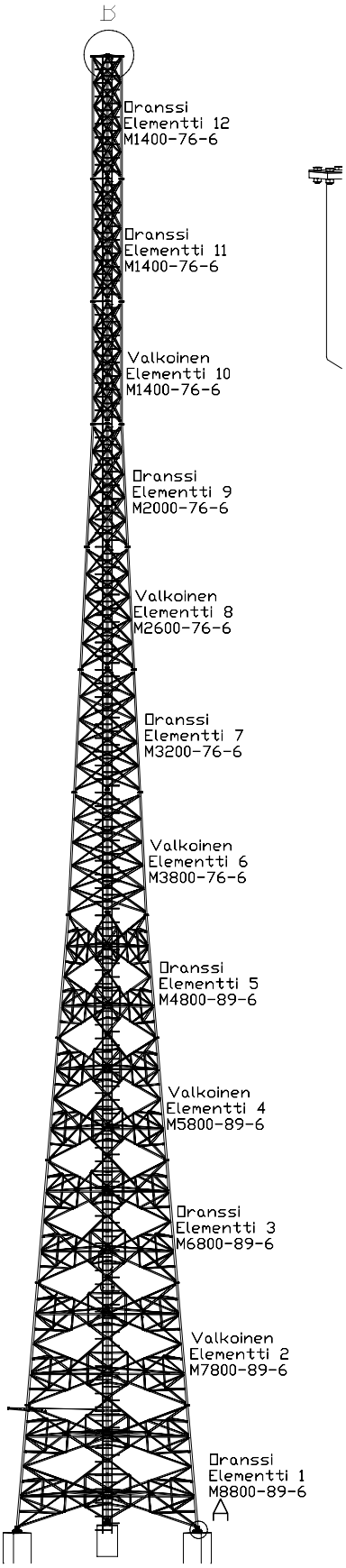

Max wind area	15 m2
Operational wind	15 m/s
Survival wind	45 m/s
Application	BTS

Aerial Oy
Box 22
04401 Järvenpää
Finland
Tel. +358 9 2790 120
Fax +358 9 2910 210
http://www.aerial.fi
aerial@aerial.fi

Square 4000/114-75-1000

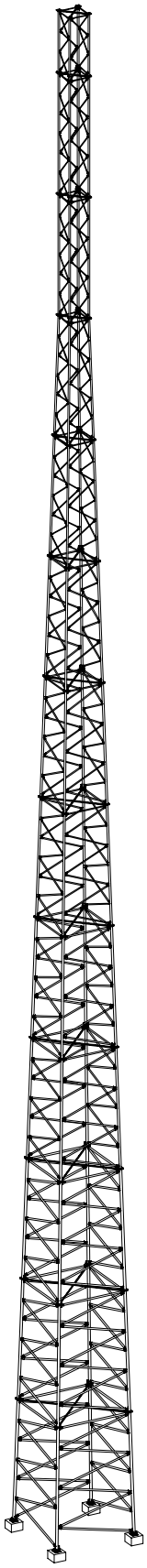

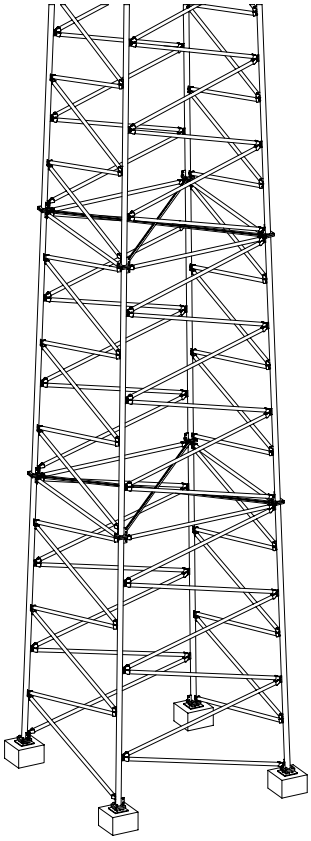

Aerial Oy

Box 22
04401 Järvenpää
Finland

Tel. +358 9 2790 120
Fax +358 9 2910 210

http://www.aerial.fi
aerial@aerial.fi

Element 3800/76-6

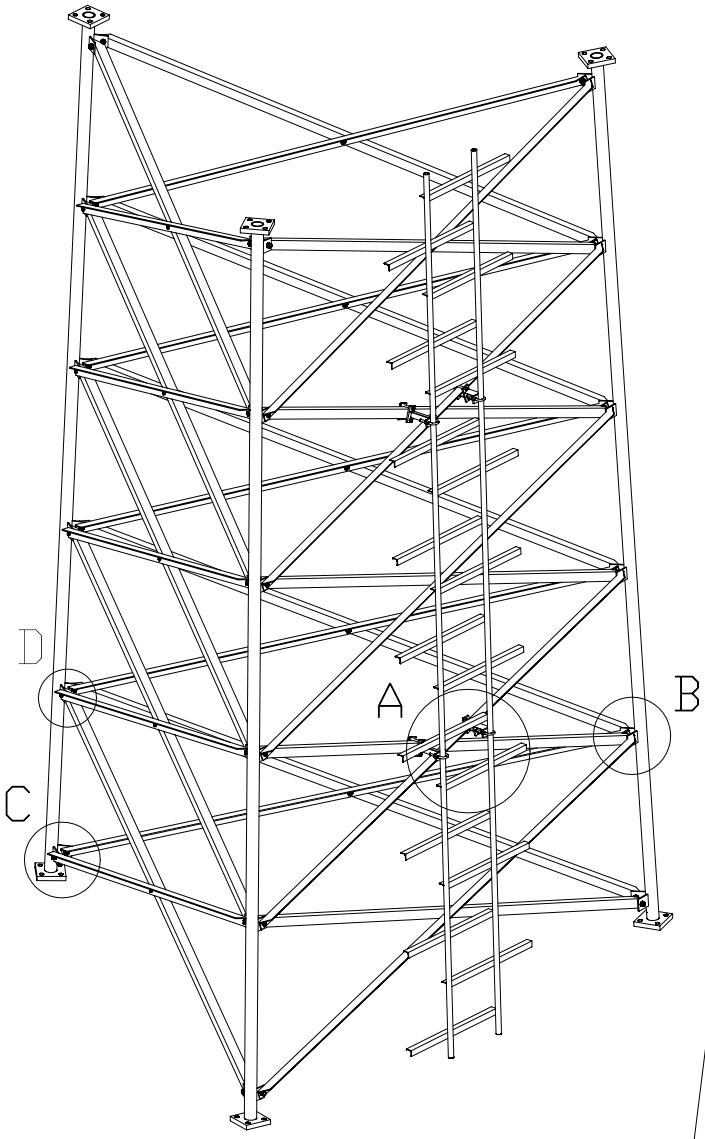

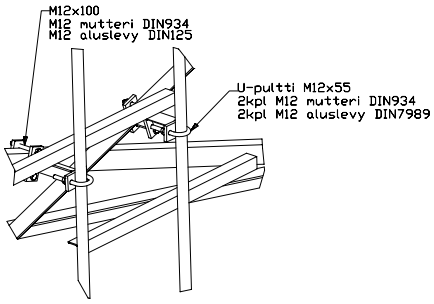

Aerial Oy
Box 22
04401 Järvenpää
Finland
Tel. +358 9 2790 120
Fax +358 9 2910 210
http://www.aerial.fi
aerial@aerial.fi

Element 8800/89-6

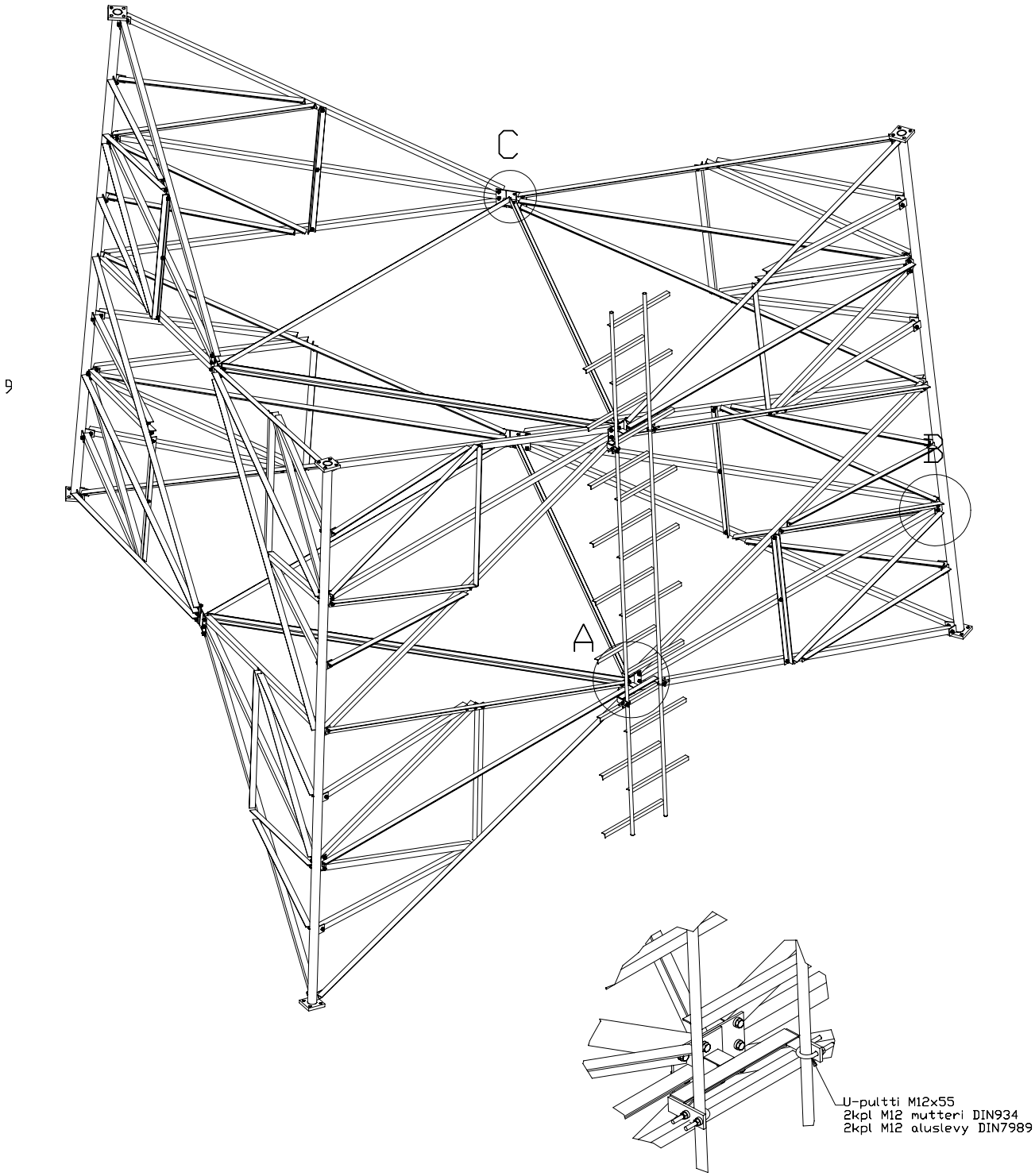

Aerial Oy
Box 22
04401 Järvenpää
Finland
Tel. +358 9 2790 120
Fax +358 9 2910 210
http://www.aerial.fi
aerial@aerial.fi

Tower

2800-101-42-1300 square

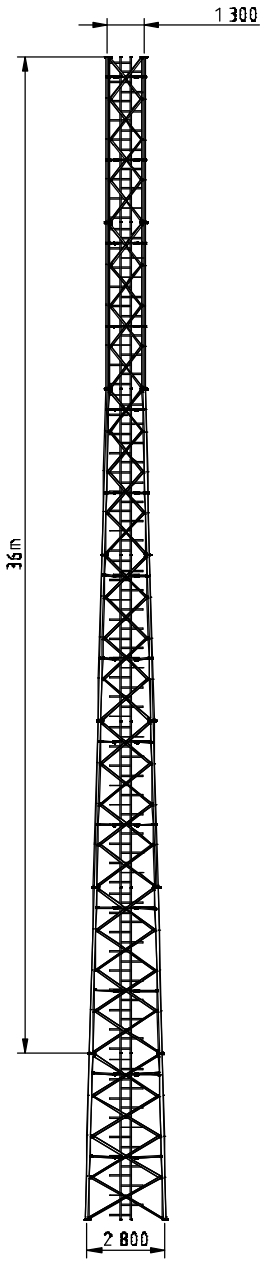

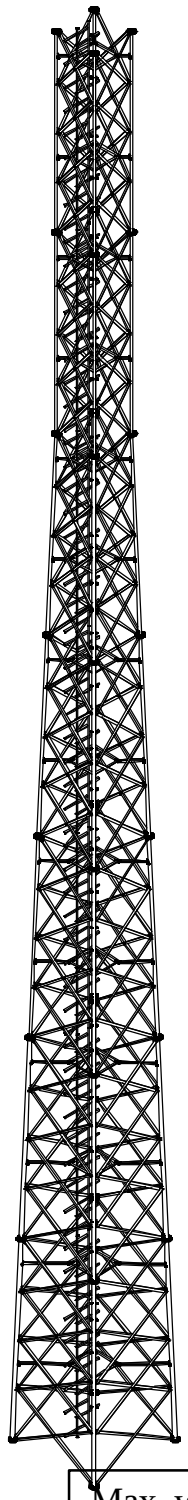

Max wind area:	25 m2
Survival wind:	50 m/s
Operational wind	20 m/s
Application	BTS

Aerial Oy
Box 22
04401 Järvenpää
Finland
Tel. +358 9 2790 120
Fax +358 9 2910 210
http://www.aerial.fi
aerial@aerial.fi

M2500/101-20

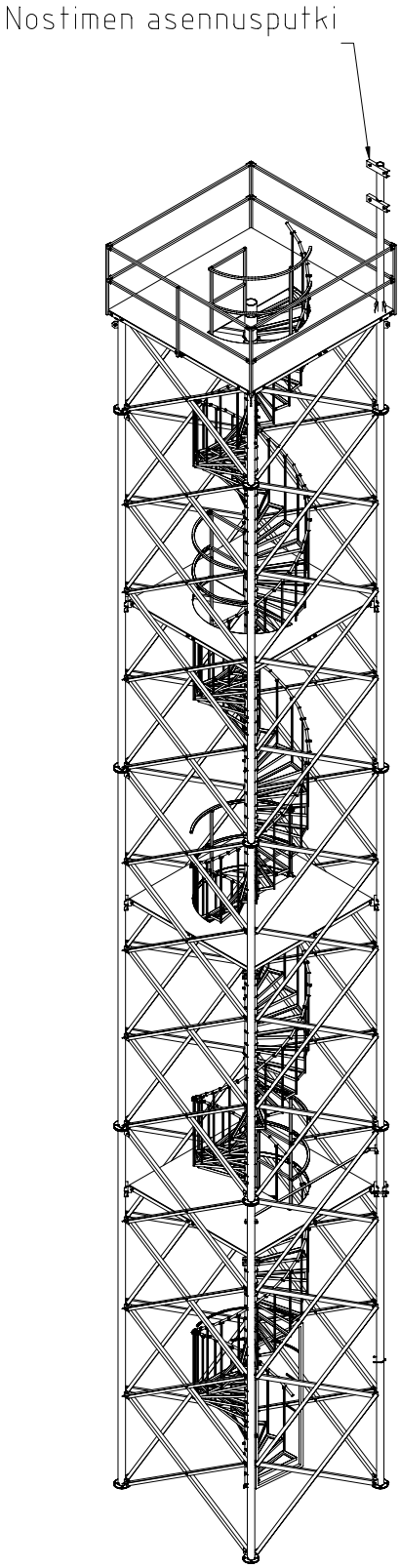

Aerial Oy

Box 22
04401 Järvenpää
Finland

Tel. +358 9 2790 120
Fax +358 9 2910 210

http://www.aerial.fi
aerial@aerial.fi

Tube masts

General

Aerial Oy tube mast is a good alternative for self supporting lattice tower. Primary targets are built-up type areas where esthetic character is important. Antenna cables can be installed inside the mast tube and this way the outward appearance of the structure becomes even neater. Plus inside the mast tube the cables are perfectly safe from damages.

Tube mast height and element sections can be easily adjusted according to customer's specifications.

Design standards

Finnish "Masto-ohje 1980" and international standards BS, DIN and EIA

Mast data

Typical capacity: 8...10 m²
Height: up to 48 m
Mast diameter: 1016...219 mm
Cross-section: circular
Material: Fe52D
Construction: Tube (Welded)
Bolts: DIN 931 M24
Washers: Plain DIN 7989

Antenna mounting

Antenna installation to a tube mast can be done using clamp pieces and mounting pipes around the mast body (picture below).

Surface finishing

Hot dip galvanizing according to international SFS-EN ISO 1461A standard. Minimum zinc layer thickness is 100 µm. Obstruction painting comes as an option.

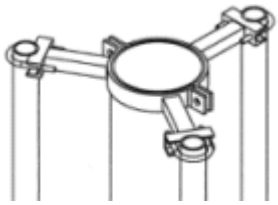

Tube mast PM 406/6-24L

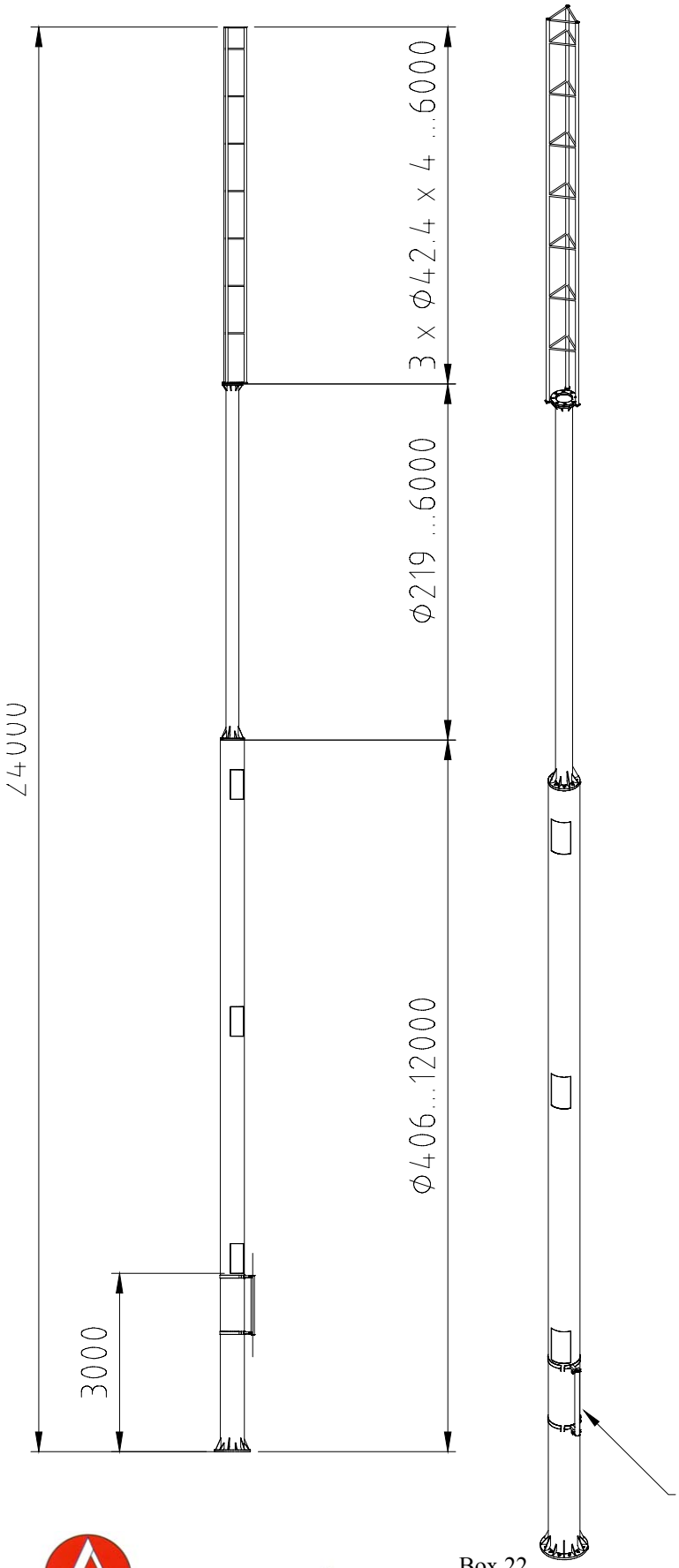

Max wind area	4,5 m2
Operational wind	15 m/s
Survival wind	45 m/s
Application	BTS

Aerial Oy
Box 22
04401 Järvenpää
Finland
Tel. +358 9 2790 120
Fax +358 9 2910 210
http://www.aerial.fi
aerial@aerial.fi

Tube mast PM 406/6-24L

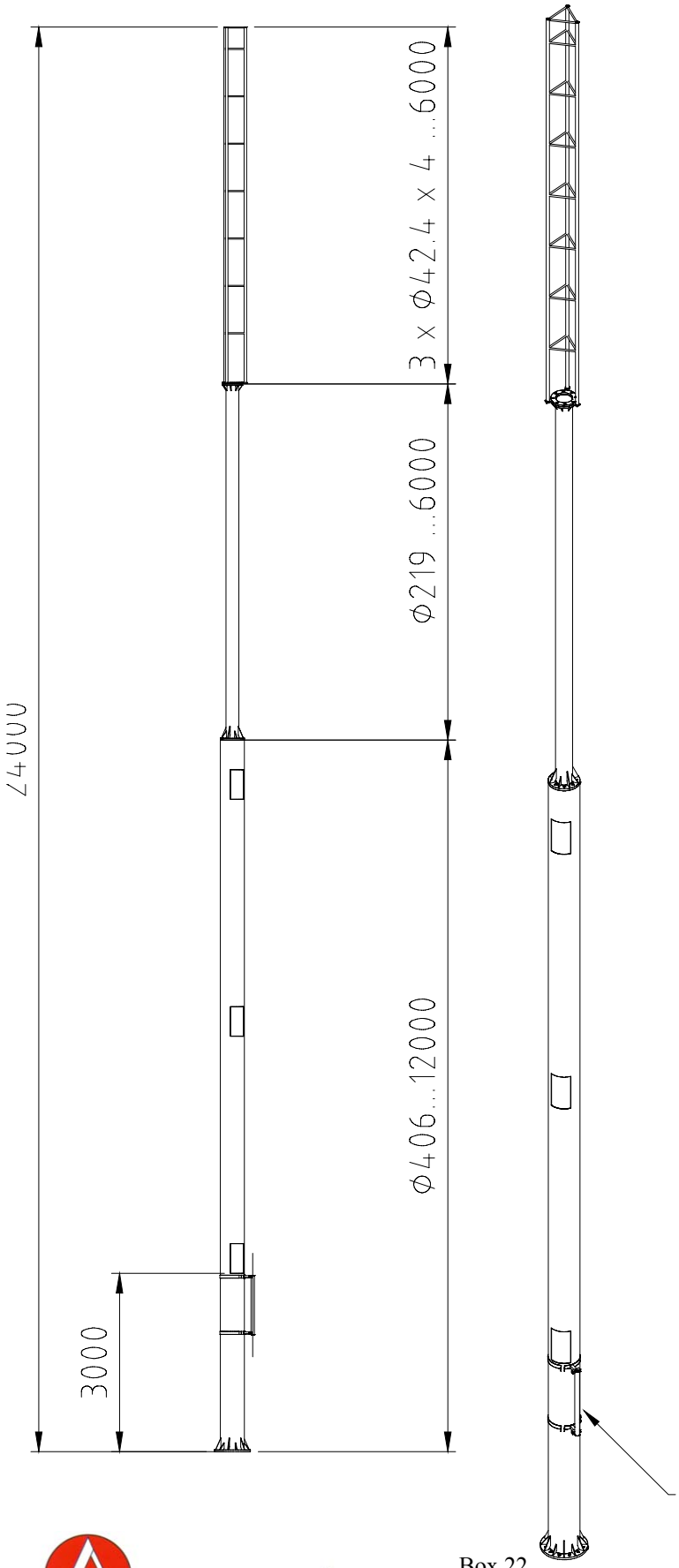

Max wind area	4,5 m2
Operational wind	15 m/s
Survival wind	45 m/s
Application	BTS

Aerial Oy
Box 22
04401 Järvenpää
Finland
Tel. +358 9 2790 120
Fax +358 9 2910 210
http://www.aerial.fi
aerial@aerial.fi

Tube mast PM 610/8-30L

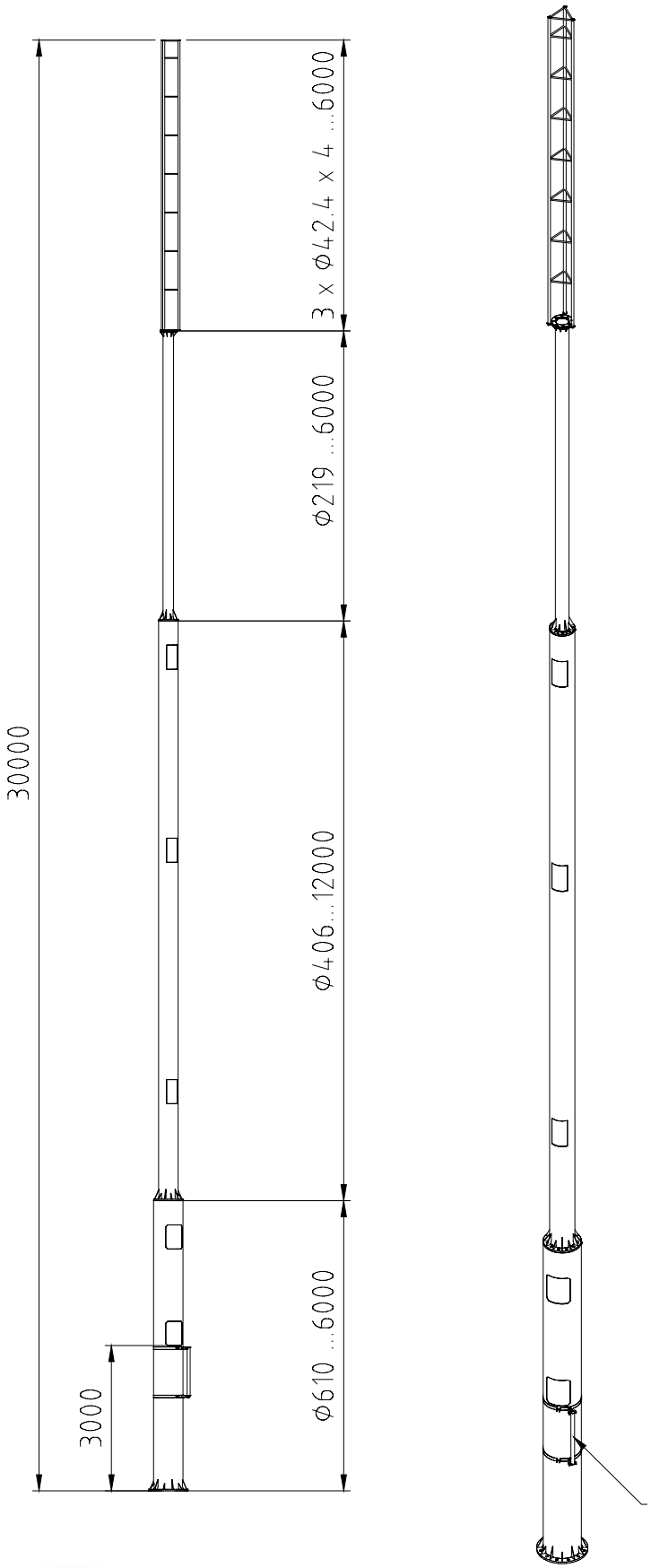

Max wind area	4,5 m2
Operational wind	15 m/s
Survival wind	45 m/s
Application	BTS

Aerial Oy
Box 22
04401 Järvenpää
Finland
Tel. +358 9 2790 120
Fax +358 9 2910 210
http://www.aerial.fi
aerial@aerial.fi

Tube mast PM 610/8-36L

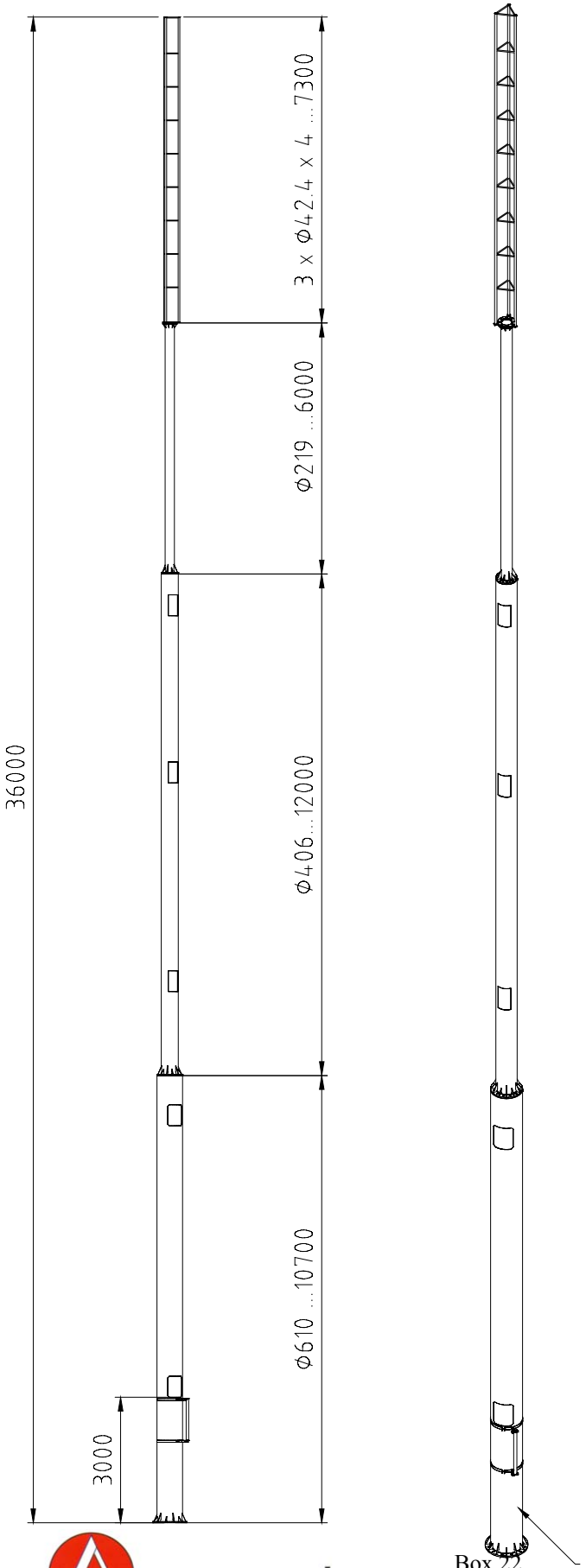

Max wind area	4,5 m2
Operational wind	15 m/s
Survival wind	45 m/s
Application	BTS

Aerial Oy
Box 22
04401 Järvenpää
Finland
Tel. +358 9 2790 120
Fax +358 9 2910 210
http://www.aerial.fi
aerial@aerial.fi

Tube mast PM 610/8-39L

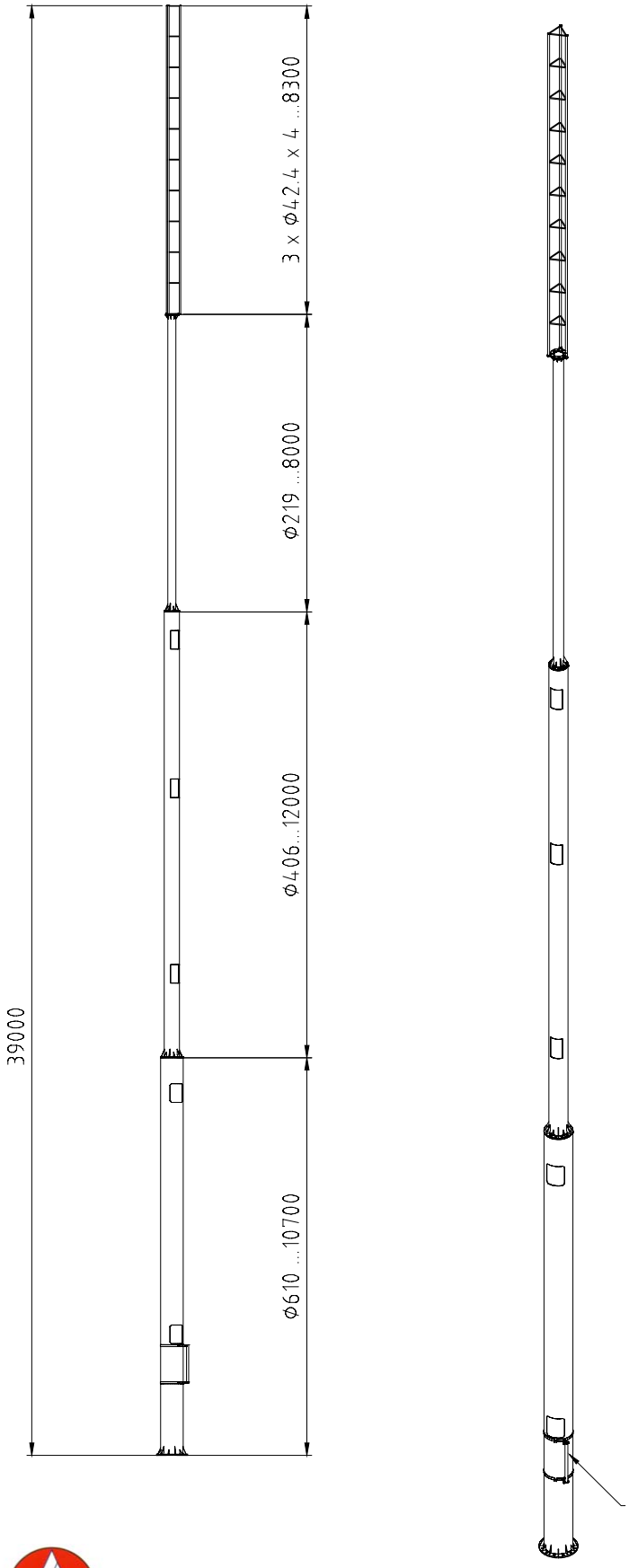

Max wind area	4,5 m2
Operational wind	15 m/s
Survival wind	45 m/s
Application	BTS

Aerial Oy
Box 22
04401 Järvenpää
Finland
Tel. +358 9 2790 120
Fax +358 9 2910 210
http://www.aerial.fi
aerial@aerial.fi

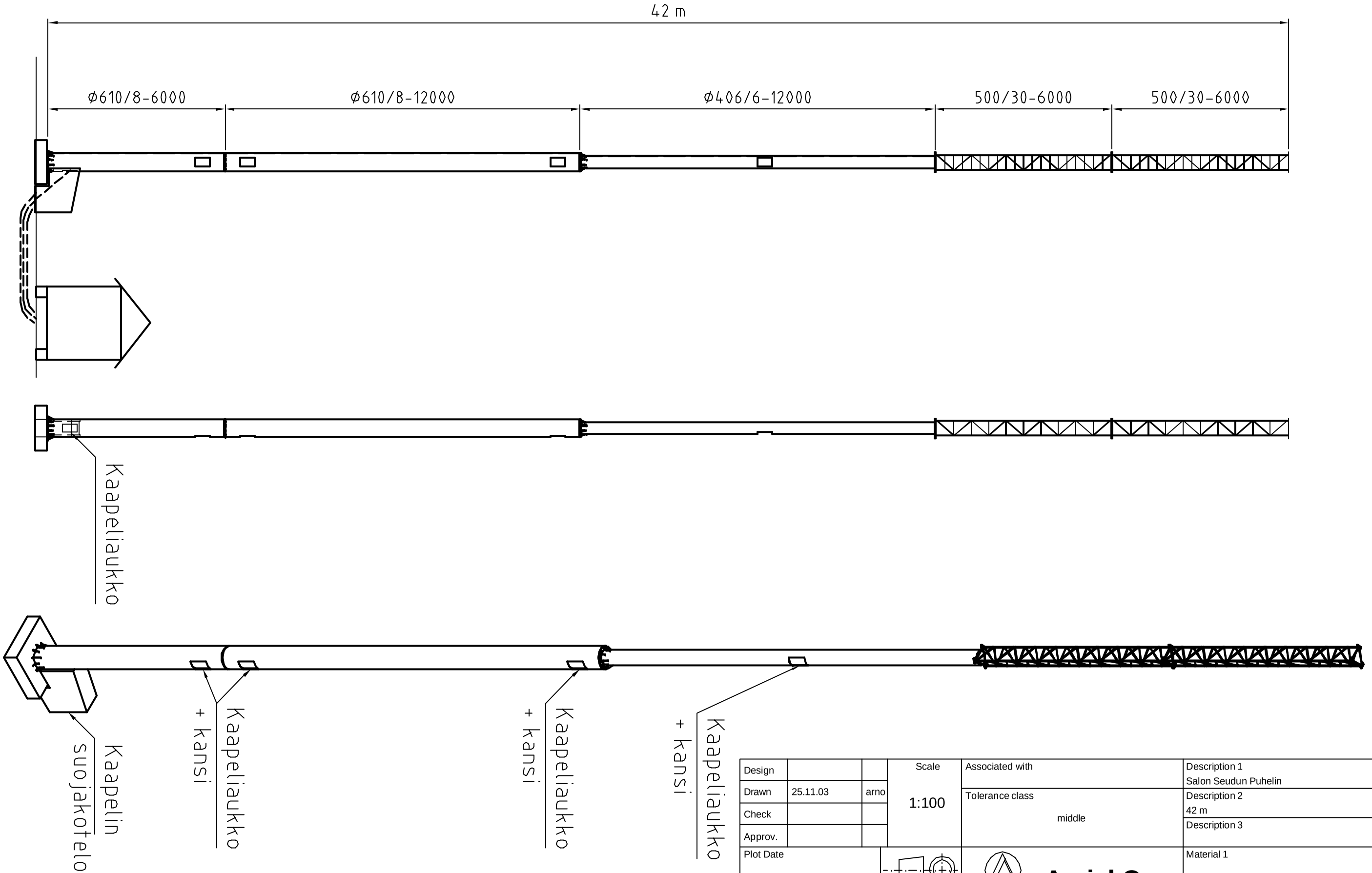

Design			Scale	Associated with	Description 1 Salon Seudun Puhelin
Drawn	25.11.03	arno	1:100	Tolerance class middle	Description 2 42 m
Check					Description 3
Approv.					
Plot Date				**Aerial Oy** Tel.+358-9-2790 120 Fax.+358-9-2910 210 Box 22 04401 Järvenpää Finland http://www.aerial.fi aerial@aerial.fi	Material 1
Mass					Outline size
DWG					

PM610/8-24-500

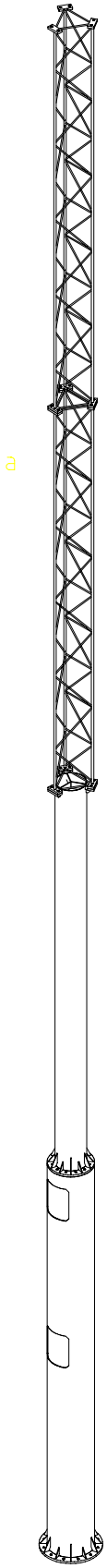

Aerial Oy

Box 22
04401 Järvenpää
Finland

Tel. +358 9 2790 120
Fax +358 9 2910 210

http://www.aerial.fi
aerial@aerial.fi

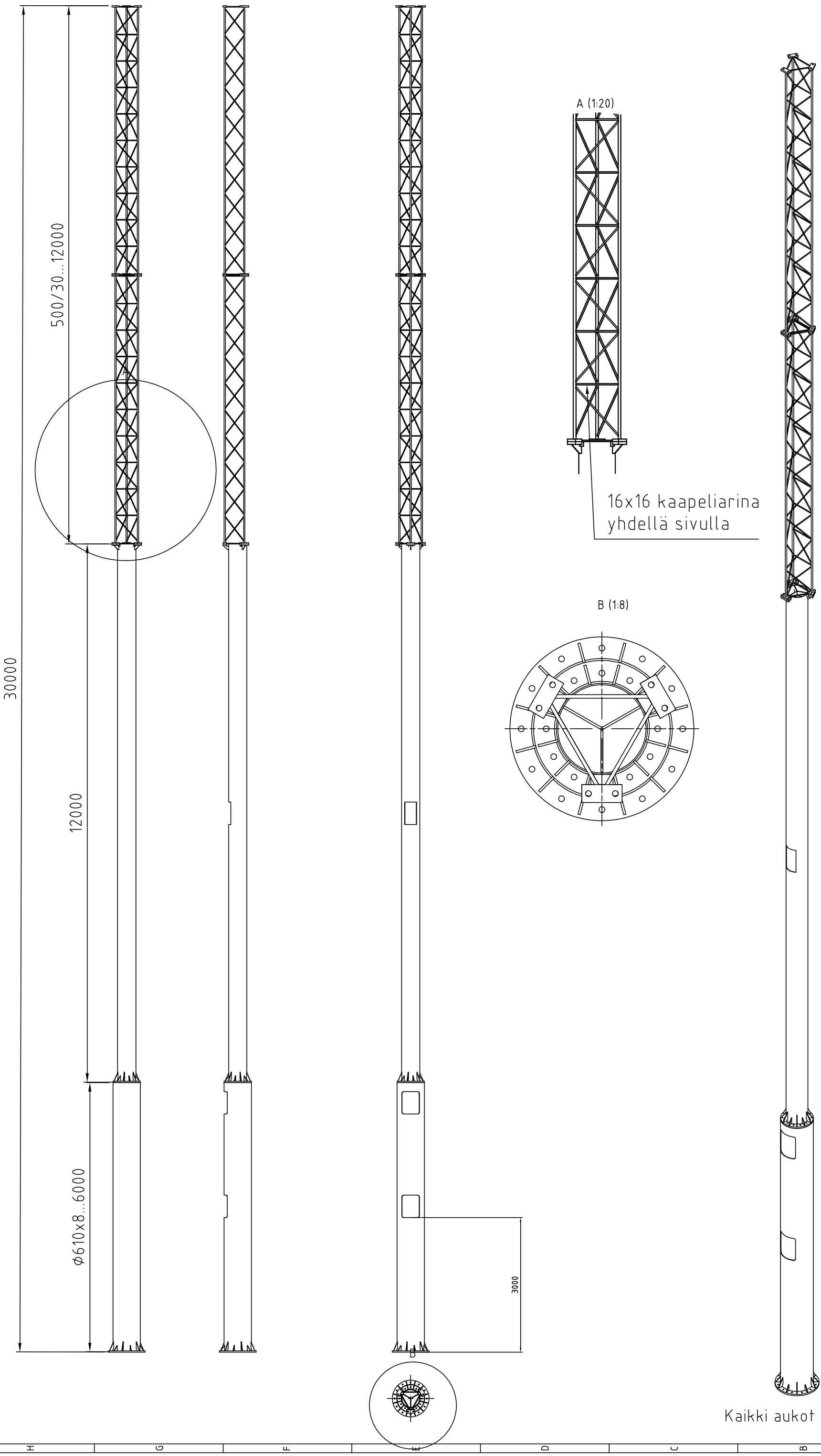

Muutos	Pvm.	Muutt.
K.aso/Kylä	Kortteli/Tila	Tontti/Rn:o
Rakennustoimenpide		Lupa n:o
Rakennuskohteen nimi ja osoite		

Virranomaisen arkistointimerkintöjä varten

Piirustuslaji

Piirustuksen sisältö: PM610-8-30-500

Mittakaava: 1:40

Suunnittelualo ja piirustuksen numero Muutos

RAK

Suunnittelijan nimi, päiväys ja allekirjoitus

Aerial Oy / Arno Tiihonen
30.8.2004

Aerial Oy
Tel.+358-9-2790 120 Fax.+358-9-2910 210
Box 22 04401 Järvenpää Finland
http://www.aerial.fi aerial@aerial.fi

Ruuvi	M/Nm
M12	80
M16	120
M20	250
M24	380
M27	550
M30	700

Taulukko 1. Ruuvien esikiristysmomentit

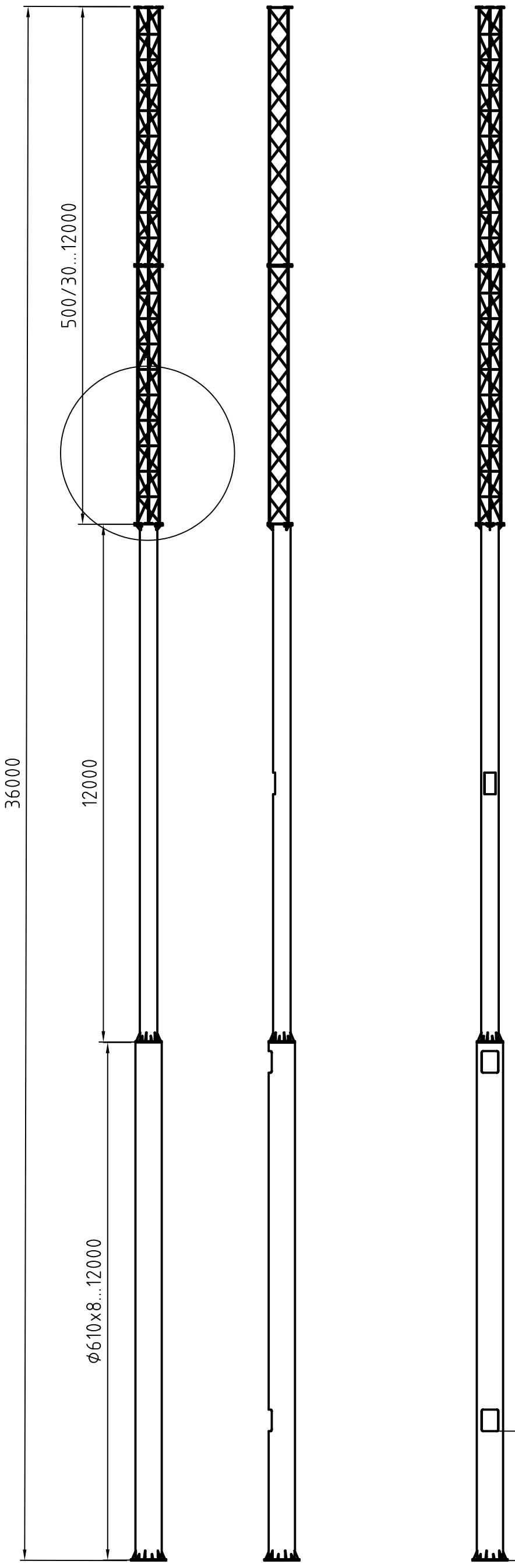

A (1:25)

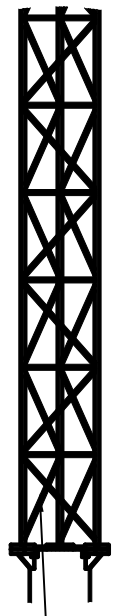

16x16 kaapeliarina
yhdellä sivulla

B (1:10)

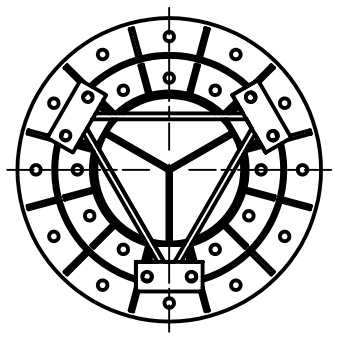

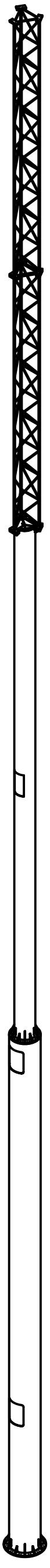

B

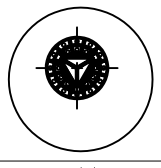

Kaikki aukot samaan suuntaan

Muutos		Pvm.	Muutt.
K.aaq/Kyki	Kortteli/Tila	Tontti/Rn:o	Viranomaisen arkistointimerkintöjä varten
Rakennustoimenpide		Lupa n:o	Piirustusaloj
Rakennuskohteen nimi ja osoite			Piirustuksen sisältö / Mittakaava PM810-8-36-500 / 1:40
Suunnittelijan nimi, päiväys ja allekirjoitus Aerial Oy / Arno Tikkanen 30.8.2004			Suunnittelualo ja piirustuksen numero Muutos RAK

Aerial Oy
Tel.+358-9-2790 120 Fax.+358-9-2910 210
Box 22 04401 Järvenpää Finland
http://www.aerial.fi aerial@aerial.fi

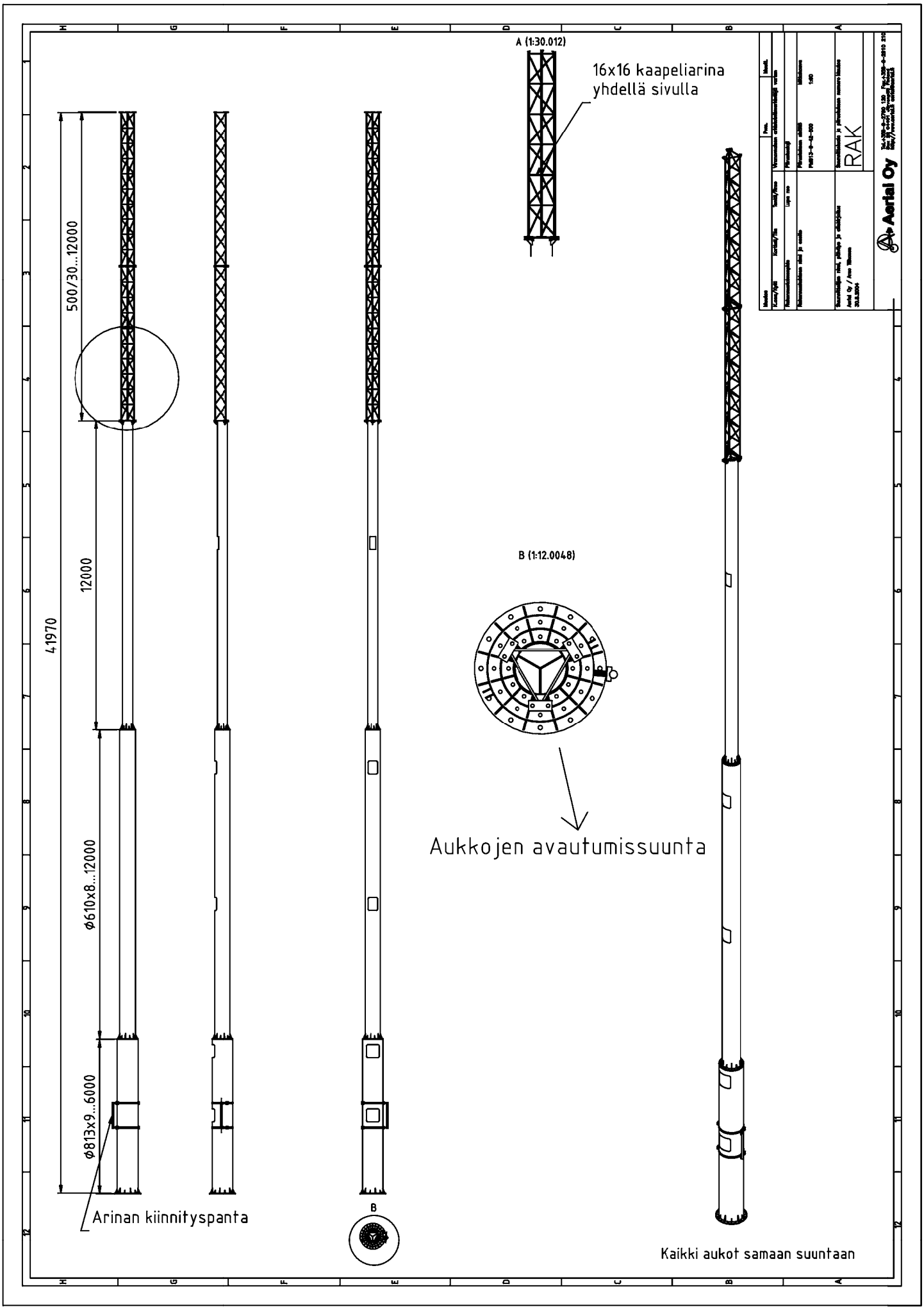
A (1:30.012)
16x16 kaapeliarina
yhdellä sivulla
500/30...12000
12000
41970
Ø610x8...12000
Ø813x9...6000
Arinan kiinnityspanta
B
B (1:12.0048)
Aukkojen avautumissuunta
Kaikki aukot samaan suuntaan
Aerial Oy
RAK

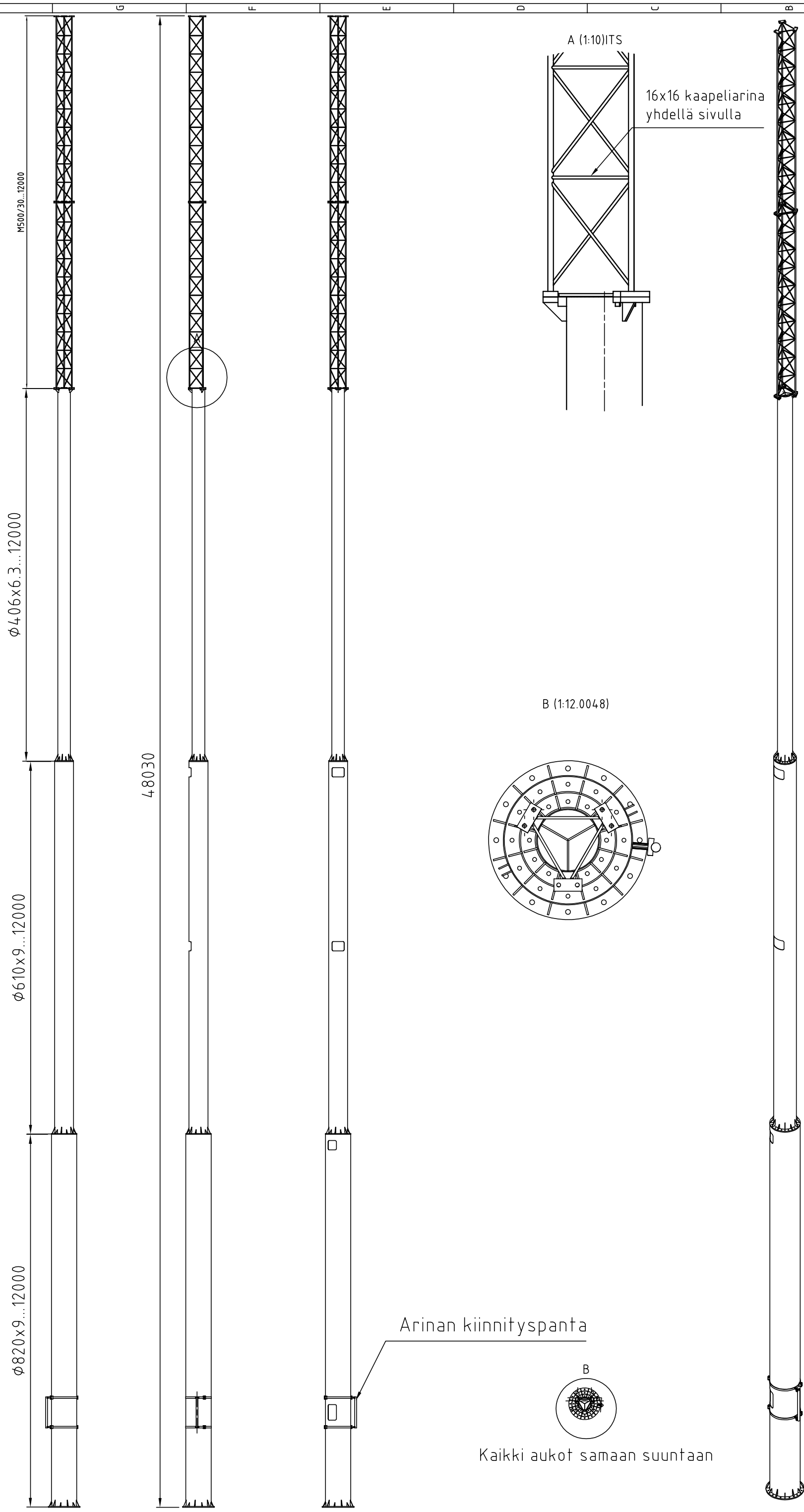

Muutos	Pvm.	Muutt.
K.osa/Kylä Kortteli/Tila Tontti/Rn:o	Viranomaisen arkistointimerkintöjä varten	
Rakennustoimenpide Lupa n:o	Piirustuslaji	
Rakennuskohteen nimi ja osoite	Piirustuksen sisältö PM820-9-48-500	Mittakaava 1:60
Suunnittelijan nimi, päiväys ja allekirjoitus Aerial Oy / Arno Tiihonen 25.1.2005	Suunnittelualo ja piirustuksen numero Muutos RAK	

Aerial Oy
Tel.+358-9-2790 120 Fax.+358-9-2910 210
Box 22 04401 Järvenpää Finland
http://www.aerial.fi aerial@aerial.fi

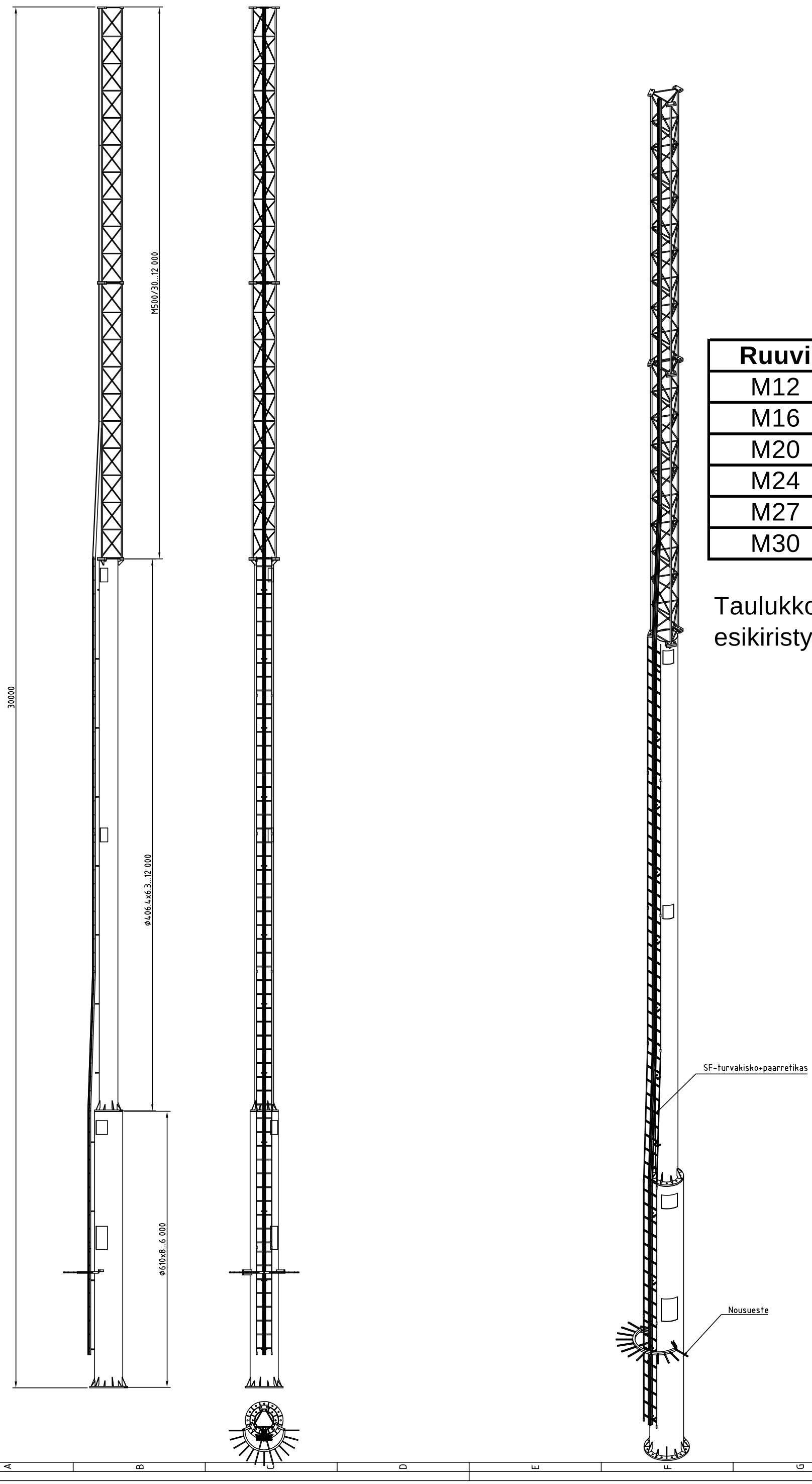

Muutos	Pvm.	Muutt.
K.osa/Kylä Kortteli/Tila Tontti/Rno	Viranomaisen arkistointimerkintöjä varten	
Rakennustoimenpide uudisrakennus Lupa n:o	Piirustuslaji Rakennelusa	
Rakennuskohteen nimi ja osoite	Piirustuksen sisältö PM610-8-30-500	Mittakaava 1:100
Suunnittelijan nimi, päiväys ja allekirjoitus Aerial Oy / Arno Tiihonen 15.3.2004	Suunnitteluala ja piirustuksen numero Muutos RAK	

Aerial Oy
Tel.+358-9-2790 120 Fax.+358-9-2910 210
Box 52, 04401 Järvenpää Finland
http://www.aerial.fi aerial@aerial.fi

Ruuvi	M/Nm
M12	80
M16	120
M20	250
M24	380
M27	550
M30	700

Taulukko 1. Ruuvien esikiristysmomentit

Rev	Kuvaus	Tekijä	Pvm

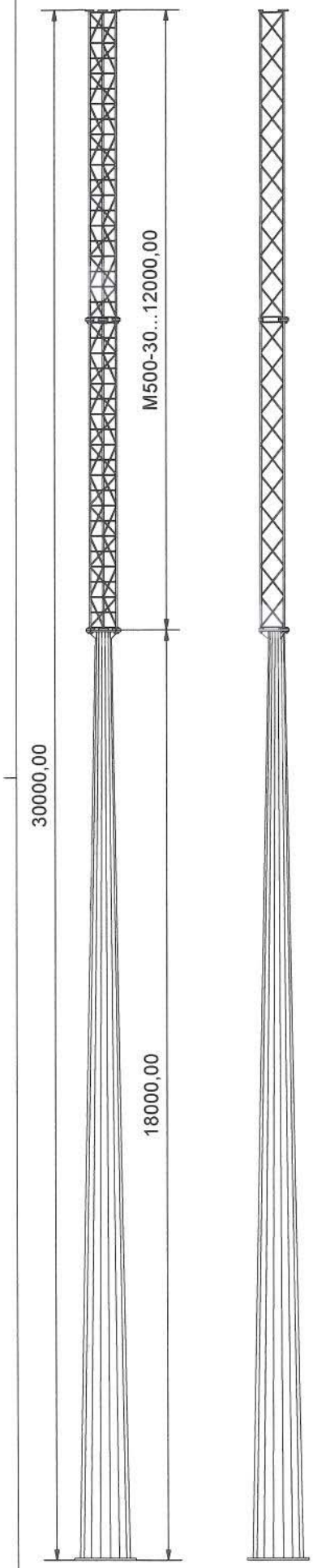

Osa	Piirustus / Nimike nro	Nimitys	Muoto,malli	Määrä	Laatu	Standardi	Kpl

Toleroimattomat mitat	ISO 2768-medium		
Pintakäsittely	Kuumasinkitys SFS-EN 12329	Vantys	-
Status	WorkInProgress	Tuote	Masto
Massa	2094,8 kg		
Suunn	21.4.2006 APT/Aerial	Mittakaava	1:80
Nimike nro	KPM960-30-500		
Tark.		Liittyy	
Korvaa			
Aerial Oy		Nimitys	Kartioputkimasto KPM960-30-500
Piirustus nro			
Malli	KPM960-30-500.iam	Piirustus	KPM960-30-500.idw
Sivu	1 / 1	Koko	A3

Pietolankatu 9, 04400 Järvenpää
tel. +358-9-2790120, fax +358-9-2910210
www.aerial.fi

Rev	Kuvaus	Tekijä	Pvm

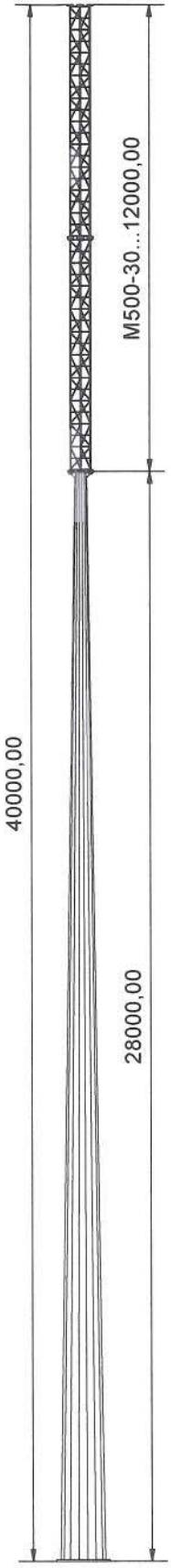

Osa	Piirustus / Nimike nro	Nimitys	Muoto,malli	Määrä	Laatu	Standardi	Kpl
Toleroimattomat mitat		ISO 2768-medium					
Pintakäsittely		Kuumasinkitys SFS-EN 12329		Väritys	-		

Status	WorkInProgress	Tuote	Masto
Suunn.	24.3.2006 APT/Aerial	Mittakaava 1:120	Liittyy
Tark.			
Aerial Oy		Nimitys	Kartioputkimasto KPM1150-40-500
Malli	KPM1150-40-500.iam	Piirustus	KPM1150-40-500.idw

Pietolankatu 9, 04400 Järvenpää
tel. +358-9-2790120, fax +358-9-2910210
www.aerial.fi

Massa	3429,7 kg
Nimike nro	KPM1150-40-500
Korvaa	
Piirustus nro	
Sivu	1 / 1
Koko	A3

Guyed tube mast M219-42

Max wind area	15 m2
Operational wind	15 m/s
Survival wind	45 m/s
Application	BTS

Aerial Oy

Box 22
04401 Järvenpää
Finland

Tel. +358 9 2790 120
Fax +358 9 2910 210

http://www.aerial.fi
aerial@aerial.fi

Moveable monopole M406-6-24

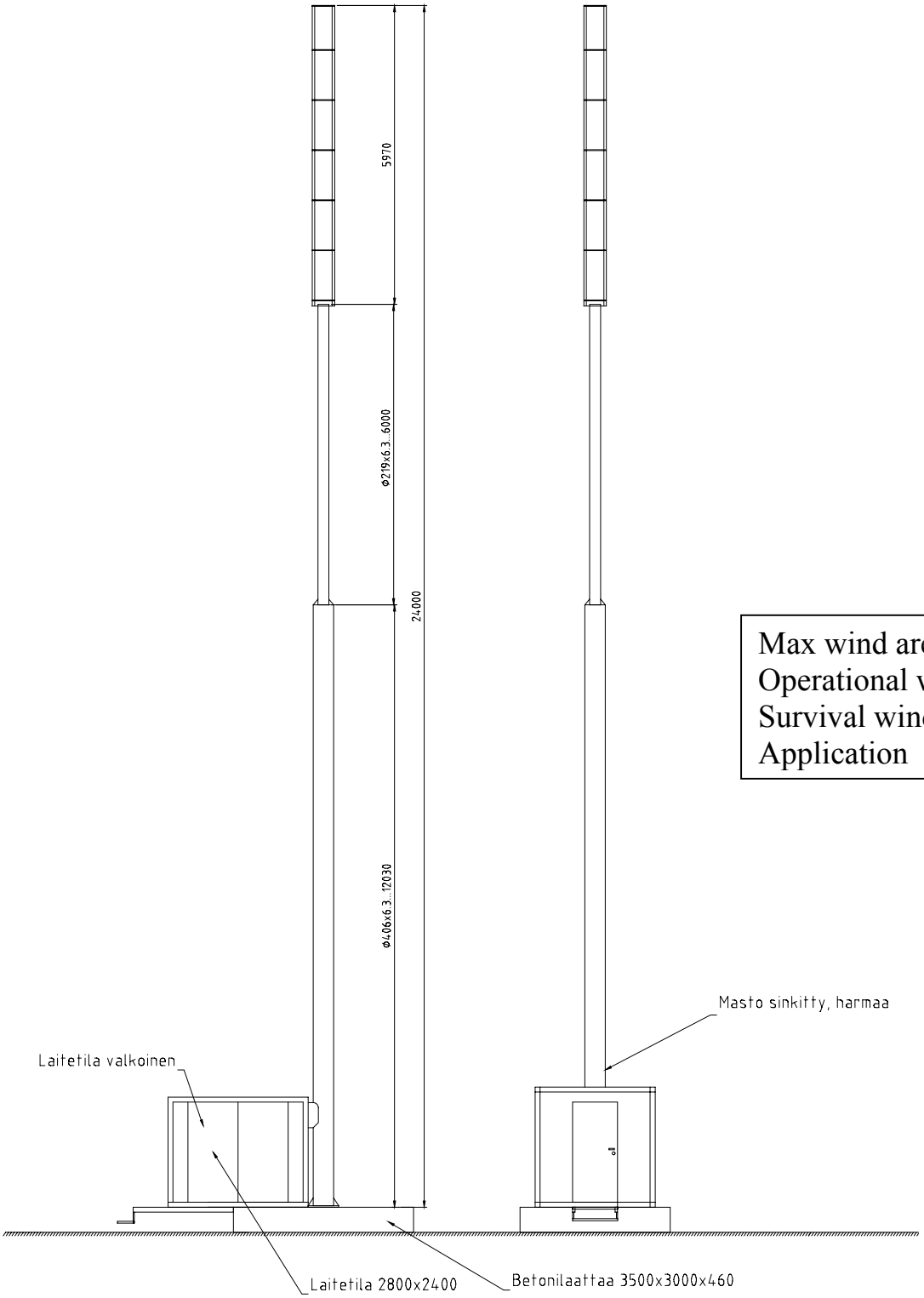

Max wind area	4,5 m2
Operational wind	15 m/s
Survival wind	38 m/s
Application	BTS

Aerial Oy
Box 22
04401 Järvenpää
Finland
Tel. +358 9 2790 120
Fax +358 9 2910 210
http://www.aerial.fi
aerial@aerial.fi

Subsurface equipment shelter

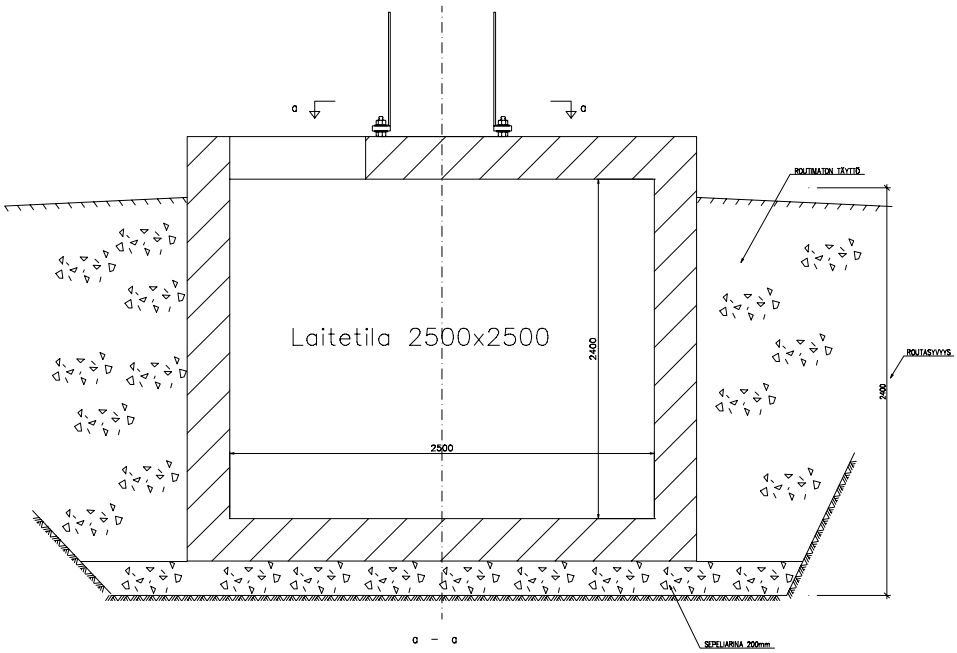

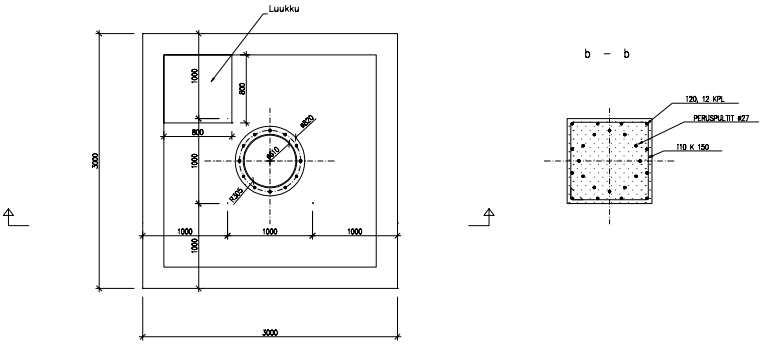

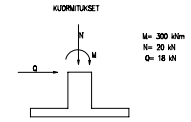

BETONI:
K 30-2, VESITIIVIS, PAKKASENKESTÄVÄ
YMPÄRISTÖLUOKKA Y2
- BETONIN SUOJAHUOKOSSUHDE 0,2
- TERÄSTEN SUOJAETÄISYYS 50mm

TERÄKSET A 500 HW

SALLITTU POHJAPAINE MAANVARAISPERUSTUKSESSA
Psall=150 kN/m2 KÄYTTÖTILASSA

NOSTON KORKEUTTA KASVATETAAN 300mm PAIKKAKUNNAN SIJAITESSA OULUN POHJOISPUOLELLA, JOTTA RUOTASYVYYTTÄ VOIDAAN KASVATTAA

Aerial Oy
Box 22
04401 Järvenpää
Finland
Tel. +358 9 2790 120
Fax +358 9 2910 210
http://www.aerial.fi
aerial@aerial.fi

City sites

In urban areas where cell sizes are smaller and base stations have to be built tighter it is mandatory to be able to take advantage of existing constructions as well as possible. It goes without saying that Aerial has the equipment for this...

Roof top masts

Roof top masts and antenna poles can be bolted straight to the roof structure or anchored by concrete weights. Several solutions are available to match your needs. Please contact mast sales for detailed proposal.

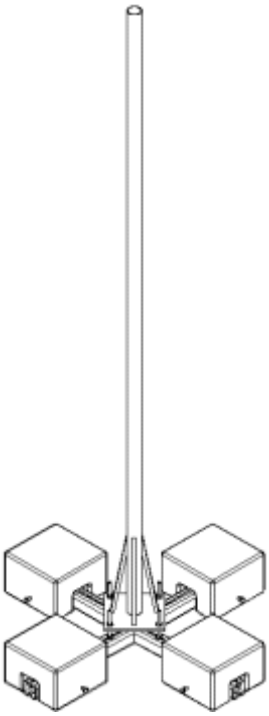

Tube with flange
AMXXX-YY

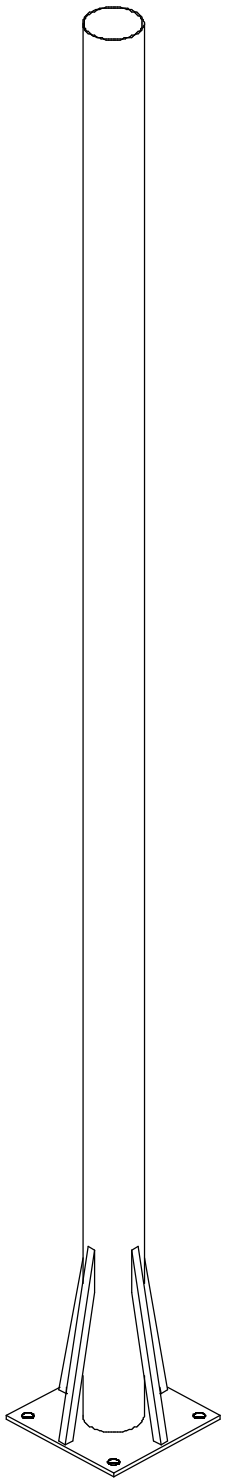

AM 60-3

AMXXX-YY
XXX=tube diameter (60 or 100)
YY=length of tube

Tubes:	60.3 x2.9 tai 101.6x2.5mm
Lenhgts :	1m,3m,6m
Material:	Fe52D Hzn
Optiot:	Aluminium, painted

Aerial Oy

Box 22
04401 Järvenpää
Finland

Tel. +358 9 2790 120
Fax +358 9 2910 210

http://www.aerial.fi
aerial@aerial.fi

AMRT60-2a

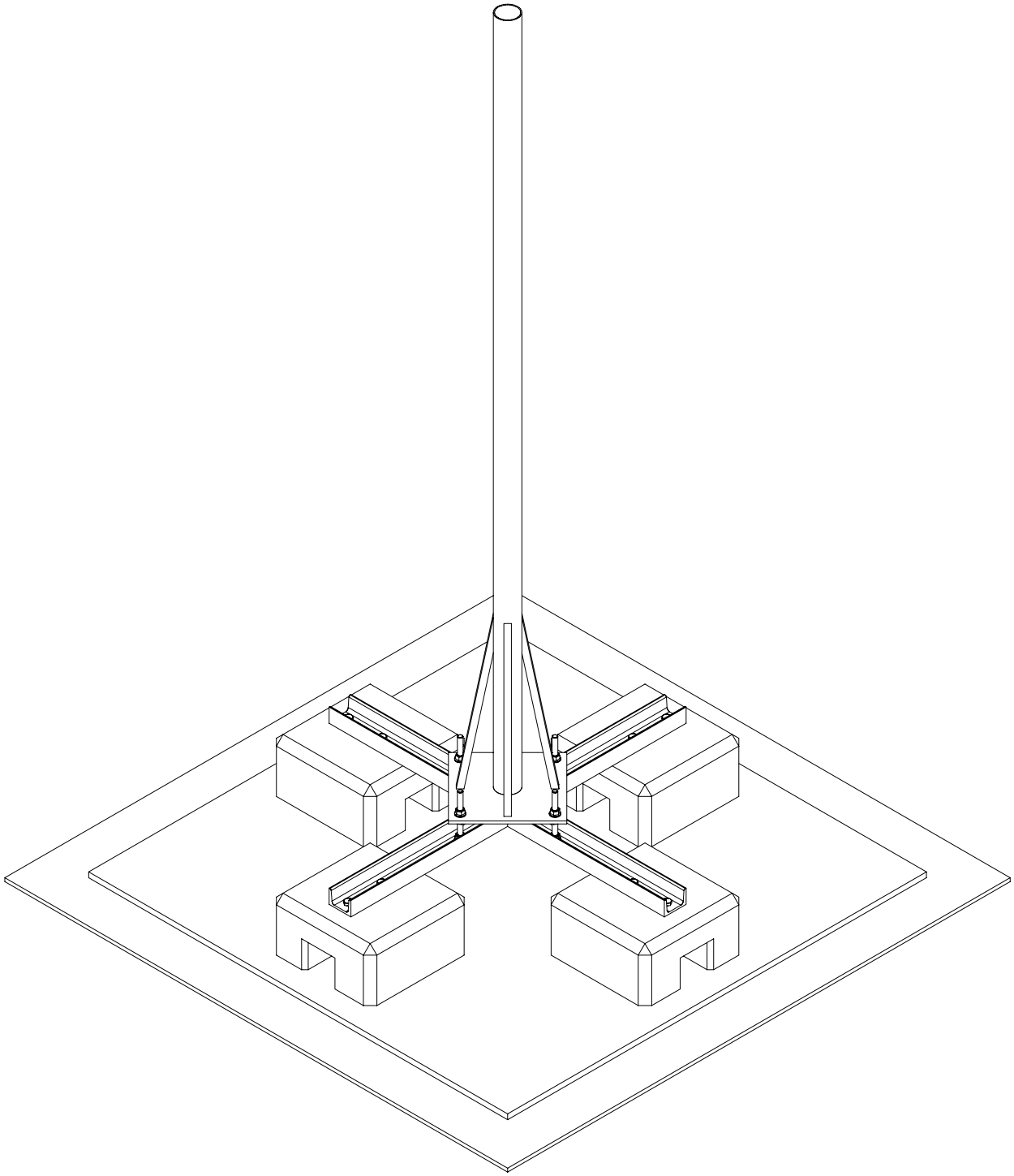

Aerial Oy
Box 22
04401 Järvenpää
Finland
Tel. +358 9 2790 120
Fax +358 9 2910 210
http://www.aerial.fi
aerial@aerial.fi

AMRT100-3a2 ja AMRT60-3a2

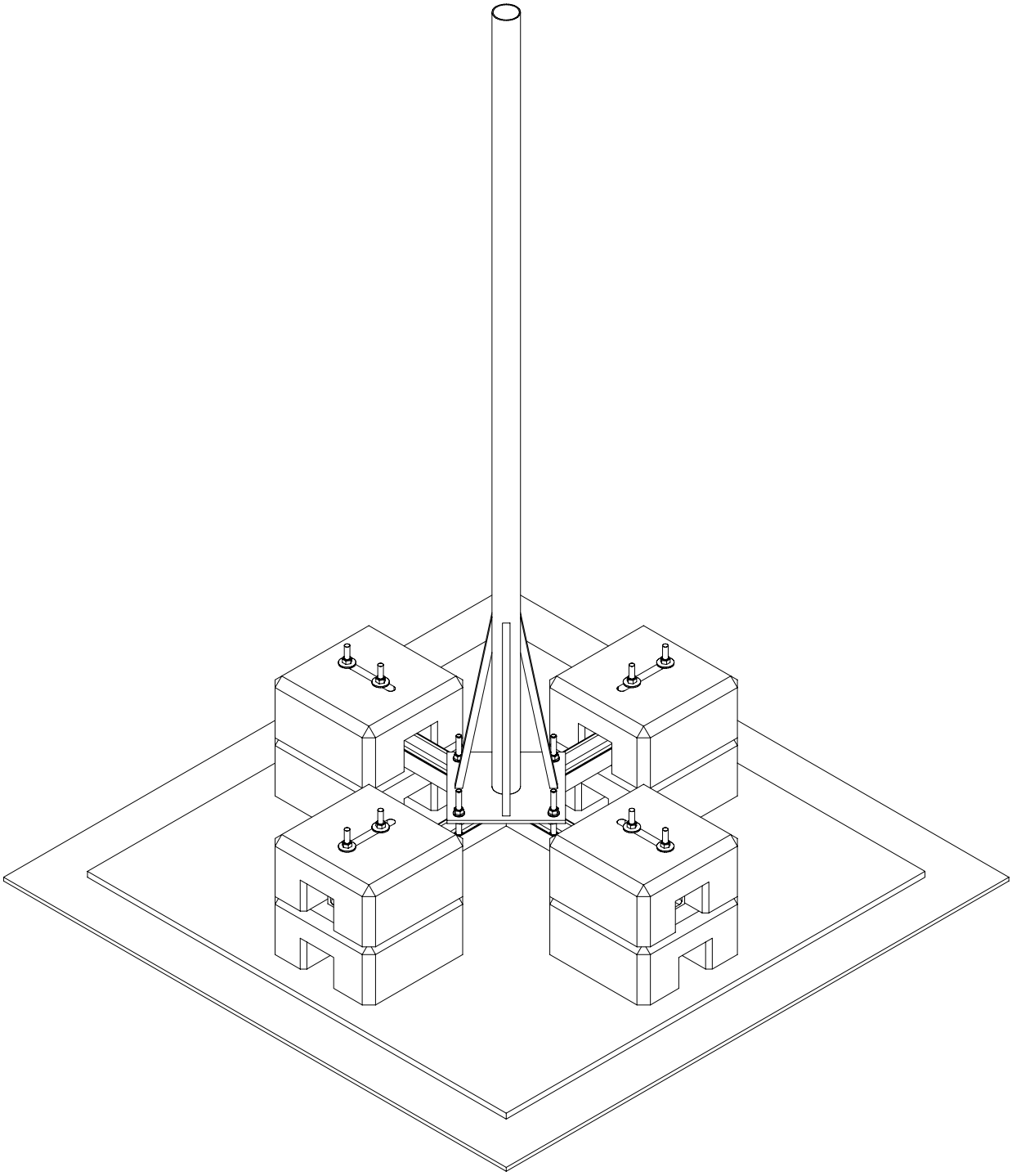

Aerial Oy
Box 22
04401 Järvenpää
Finland
Tel. +358 9 2790 120
Fax +358 9 2910 210
http://www.aerial.fi
aerial@aerial.fi

AMRT100-3C2 ja AMRT60-3C2

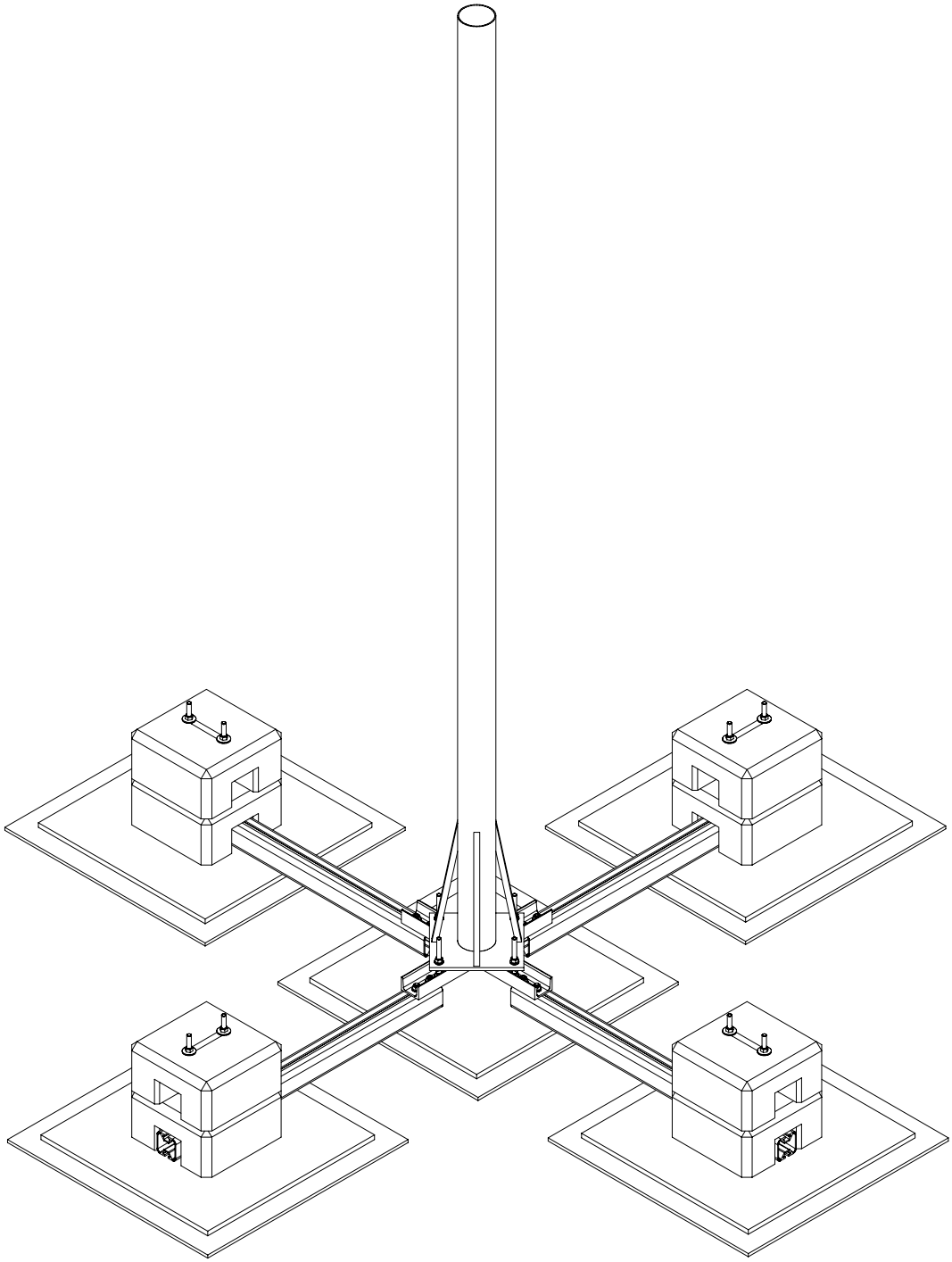

Aerial Oy
Box 22
04401 Järvenpää
Finland
Tel. +358 9 2790 120
Fax +358 9 2910 210
http://www.aerial.fi
aerial@aerial.fi

AMRT100-6B2

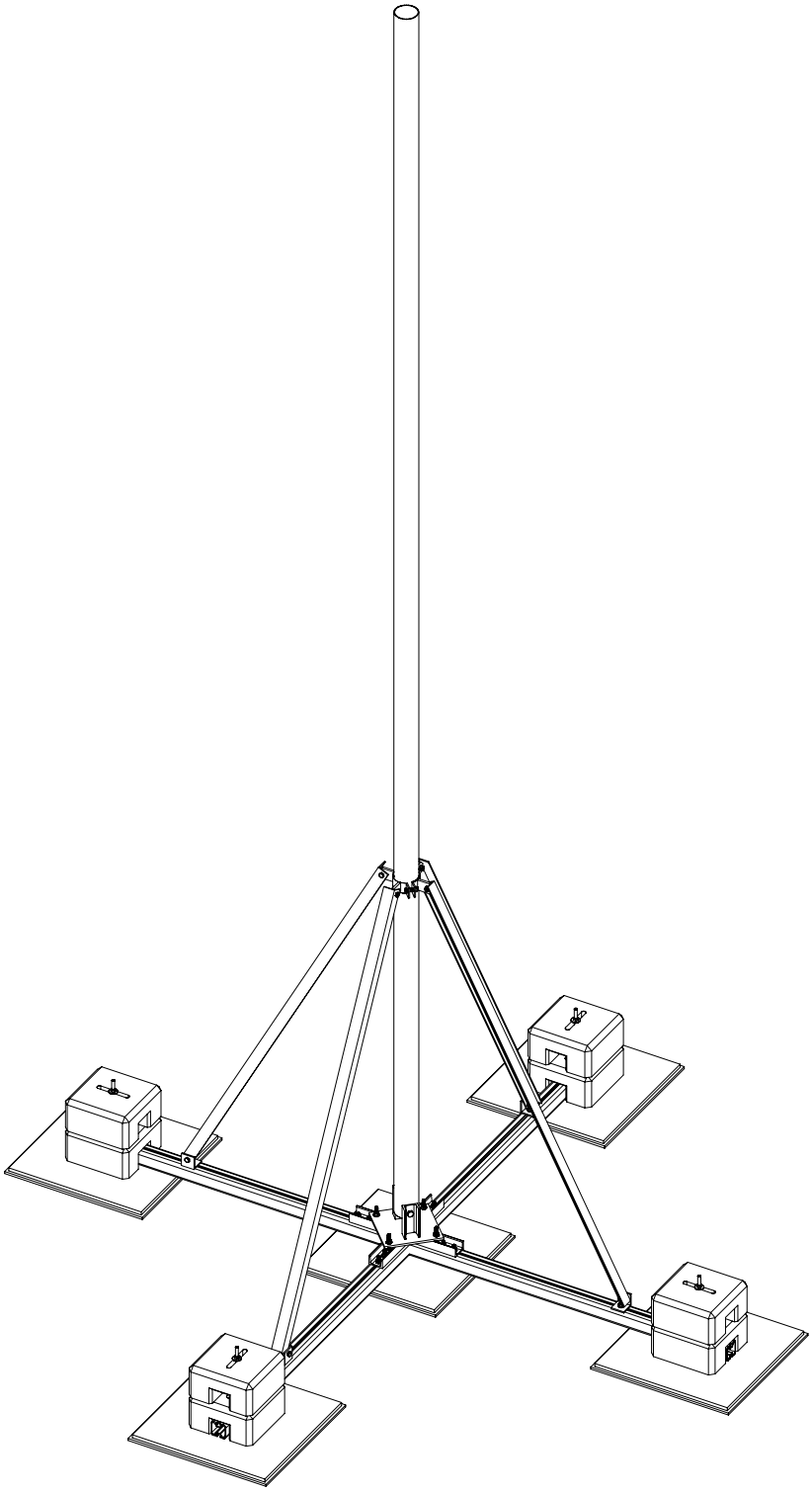

Aerial Oy

Box 22
04401 Järvenpää
Finland

Tel. +358 9 2790 120
Fax +358 9 2910 210

http://www.aerial.fi
aerial@aerial.fi

AMRT100-3D

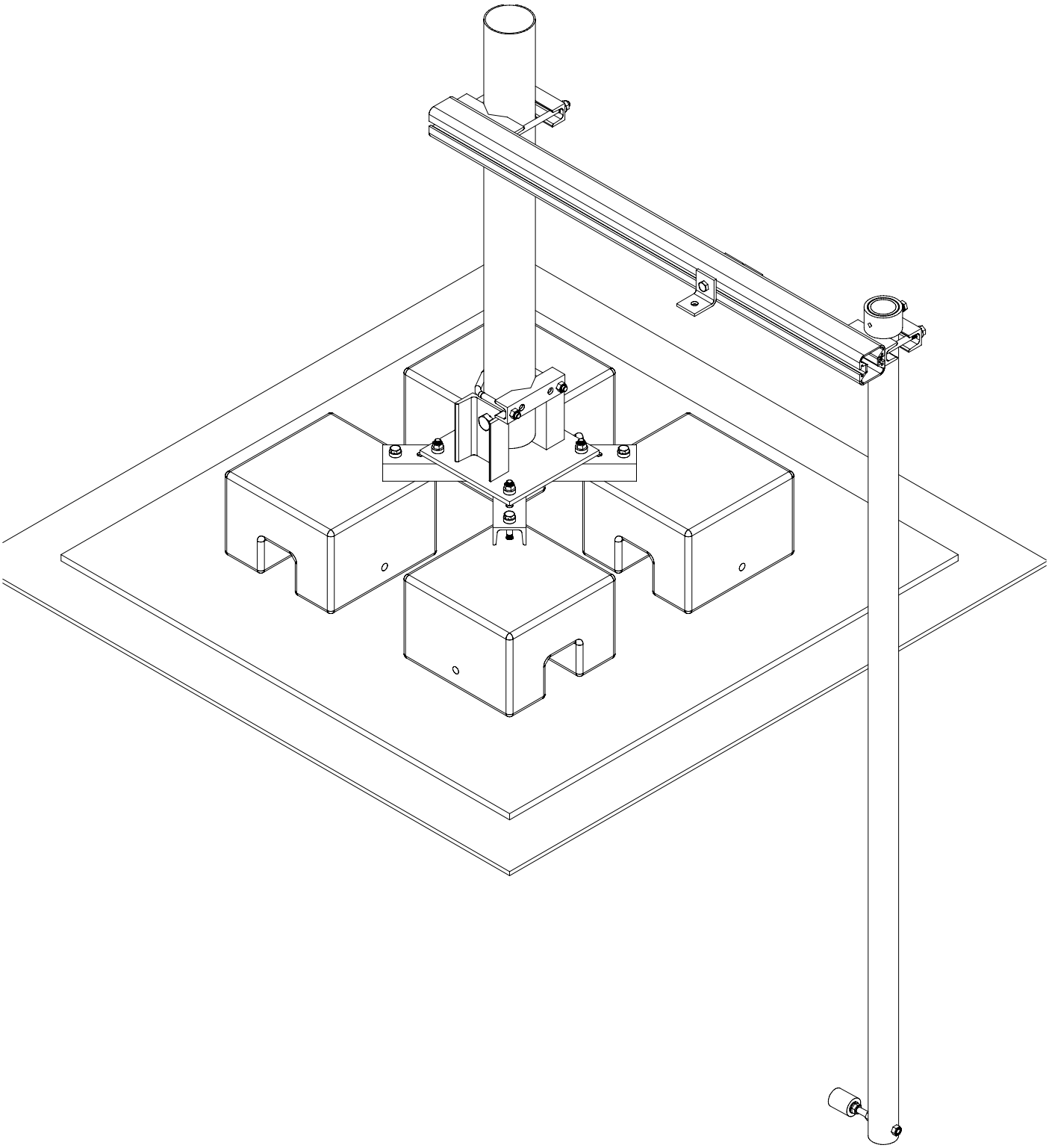

Aerial Oy
Box 22
04401 Järvenpää
Finland
Tel. +358 9 2790 120
Fax +358 9 2910 210
http://www.aerial.fi
aerial@aerial.fi

Roof top mast 100-8-35-1

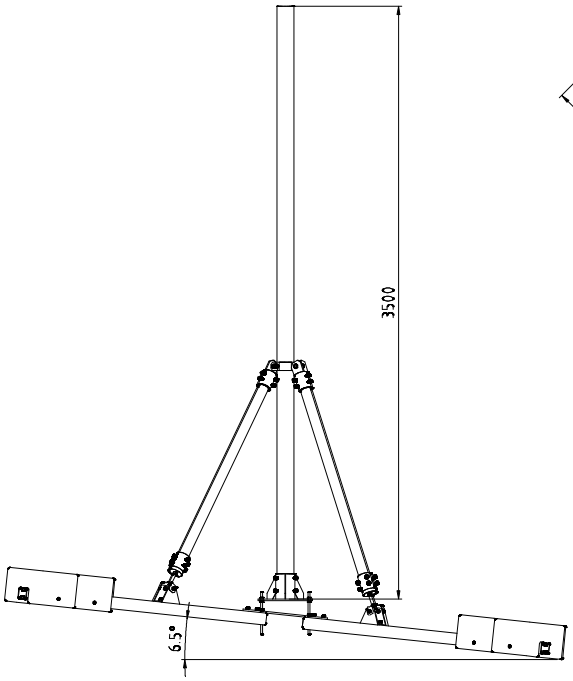

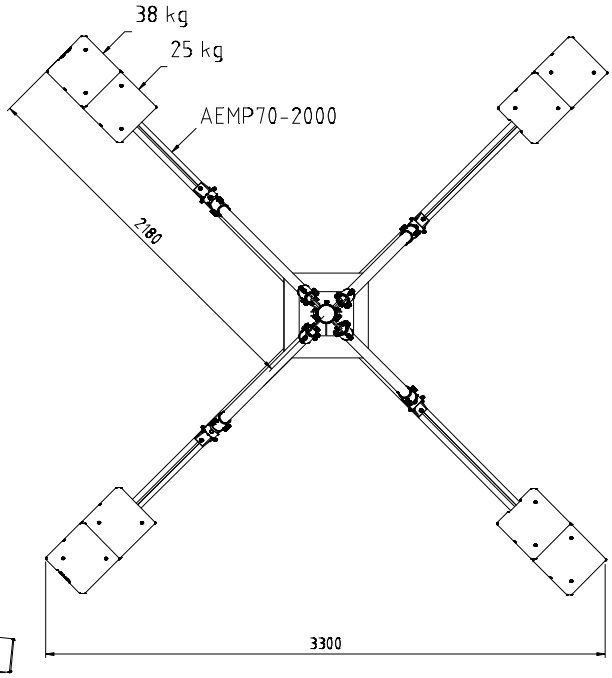

Max wind area	2 m2
Operational wind	15 m/s
Survival wind	38 m/s
Application	BTS

Aerial Oy
Box 22
04401 Järvenpää
Finland
Tel. +358 9 2790 120
Fax +358 9 2910 210
http://www.aerial.fi
aerial@aerial.fi

Guyed roof top mast PM 100-16

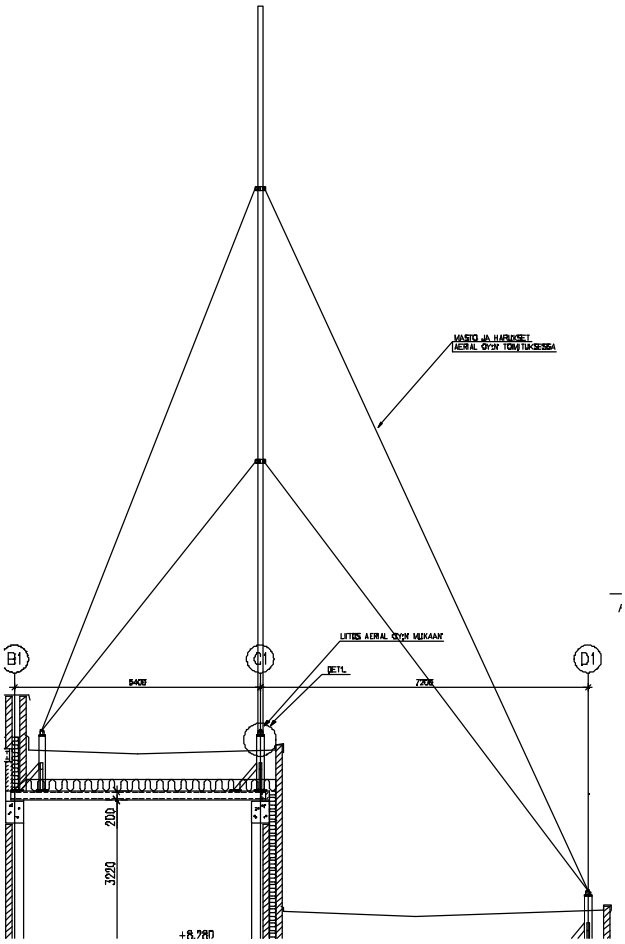

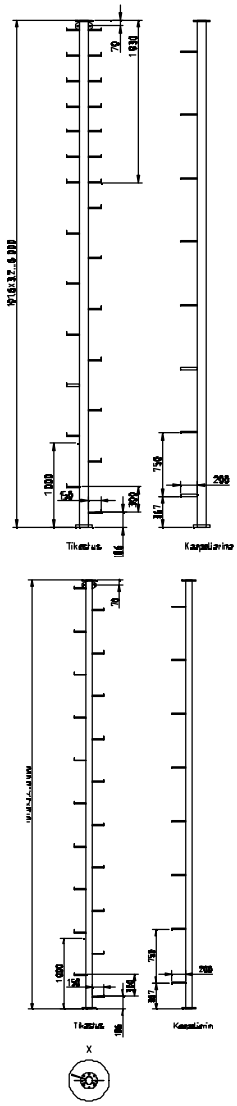

Guyed roof top mast PM 100-16 . Tube 101,6*6,3 FE 52 D,Hot zip galvanized. Steps and fittings for cables.

Aerial Oy

Box 22
04401 Järvenpää
Finland

Tel. +358 9 2790 120
Fax +358 9 2910 210

http://www.aerial.fi
aerial@aerial.fi

Roof top mast PM 168-12, wall mounted

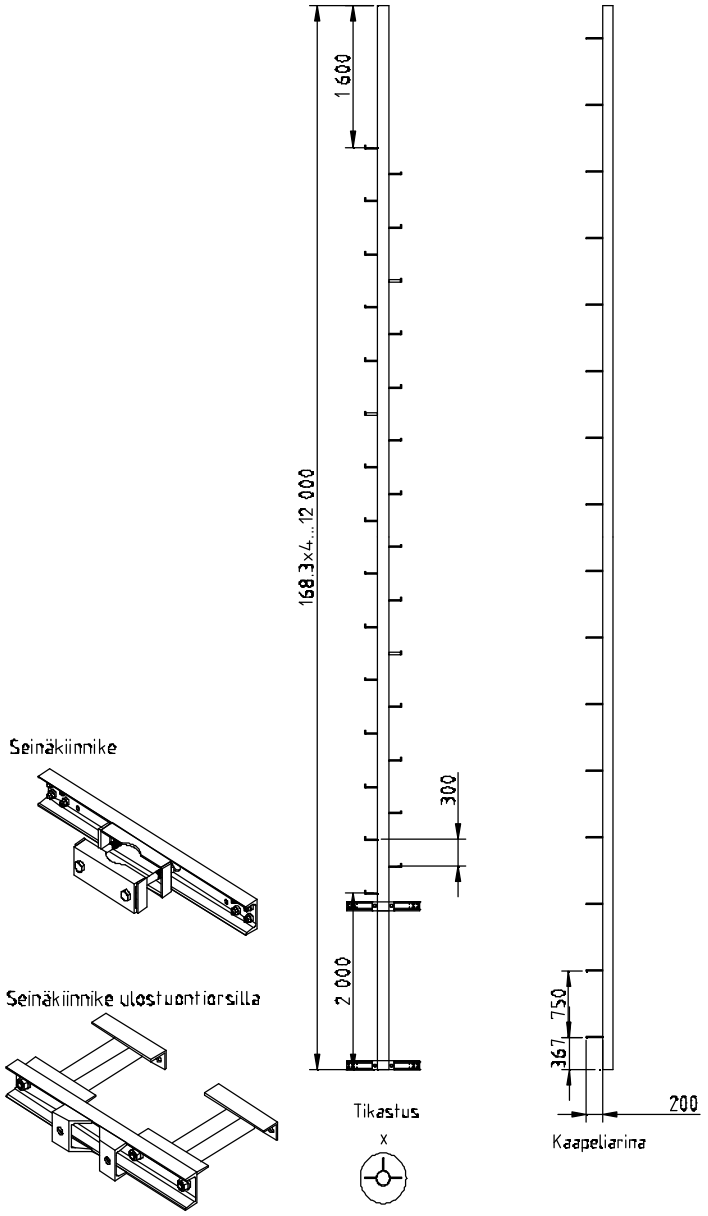

Length 10…16 m. Tube diam 168,3 tai 219 mm
Hot zip galvanized. Steps ang cable fittings

Aerial Oy

Box 22
04401 Järvenpää
Finland

Tel. +358 9 2790 120
Fax +358 9 2910 210

http://www.aerial.fi
aerial@aerial.fi

Roof top mast AMRT400-YY

AMRT400-4

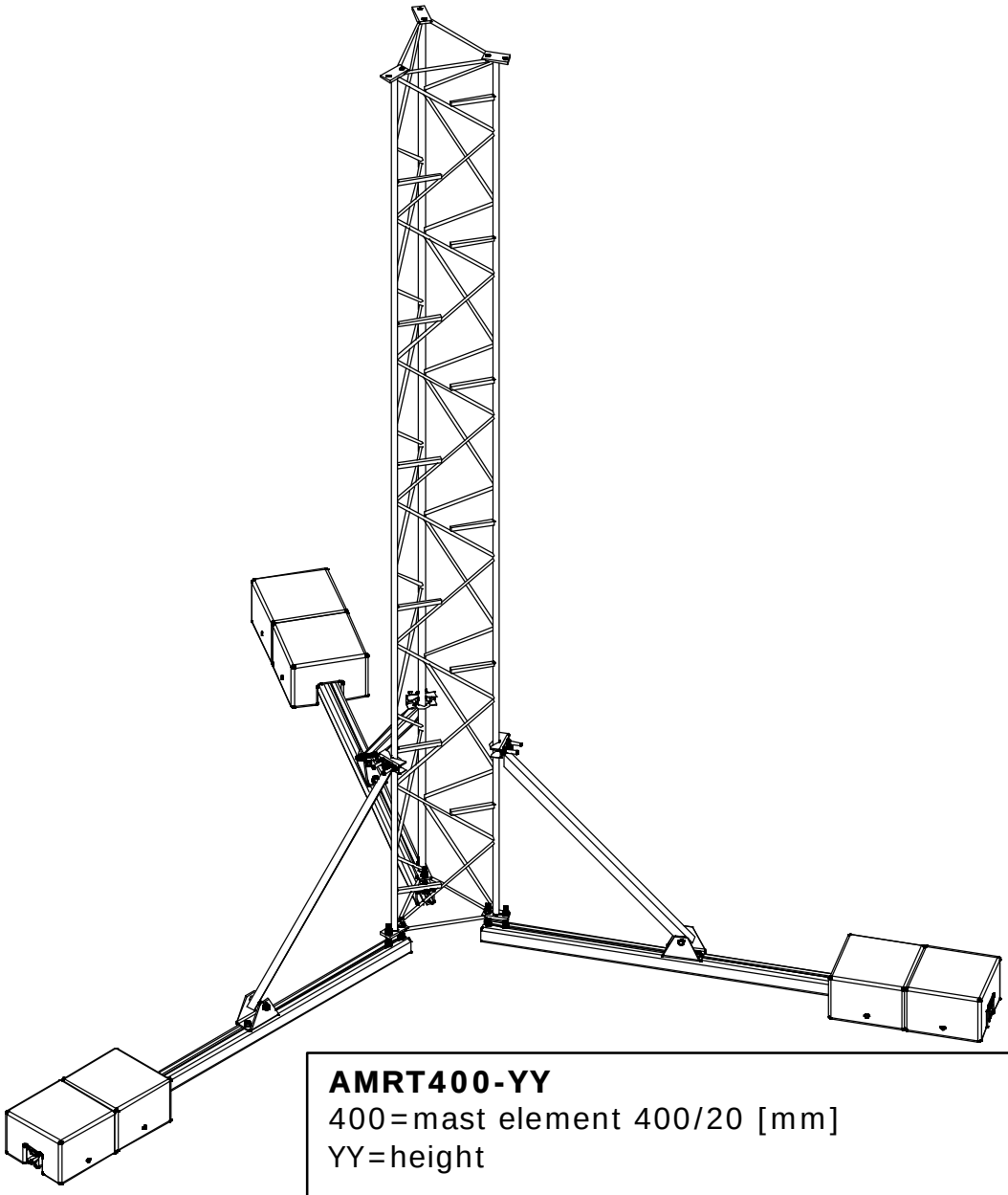

AMRT400-YY
400=mast element 400/20 [mm]
YY=height

Max height:	12m
Material:	Fe52D Hzn,AlMgSiT6
Optiot:	Material: Aluminium Painting

Aerial Oy

Box 22
04401 Järvenpää
Finland

Tel. +358 9 2790 120
Fax +358 9 2910 210

http://www.aerial.fi
aerial@aerial.fi

AMRT400-12-1

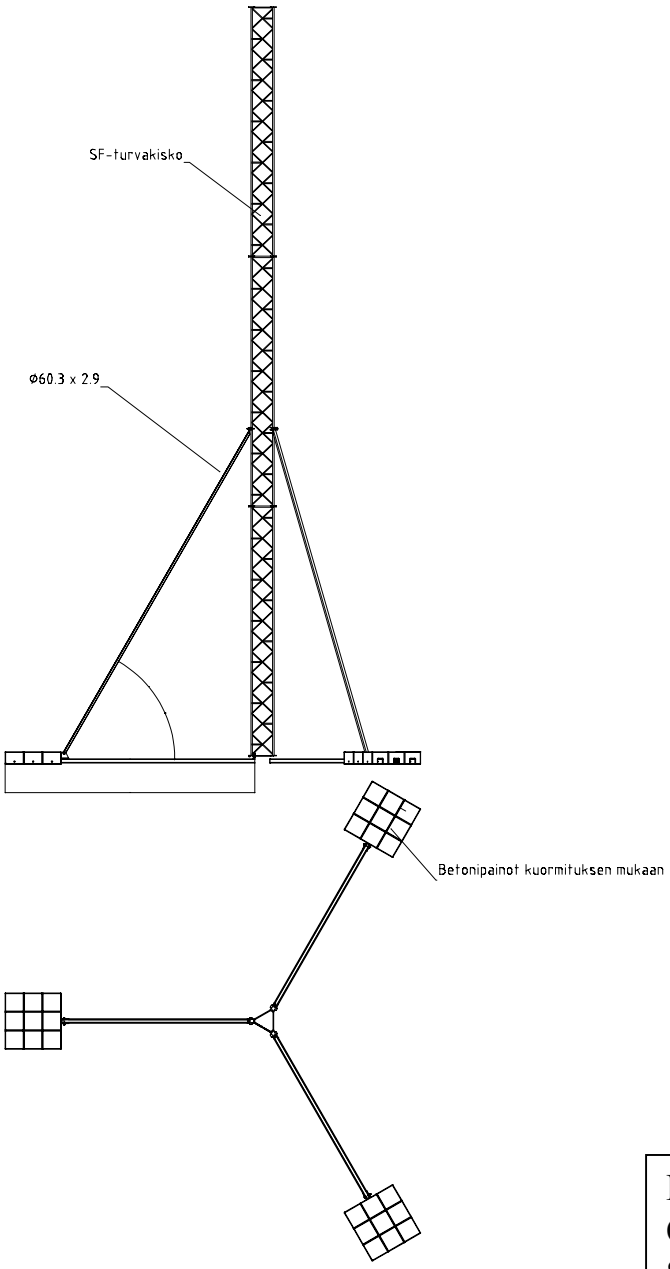

Max wind area	3 m2
Operational wind	15 m/s
Survival wind	38 m/s
Application	BTS

Aerial Oy
Box 22
04401 Järvenpää
Finland
Tel. +358 9 2790 120
Fax +358 9 2910 210
http://www.aerial.fi
aerial@aerial.fi

Concrete frame

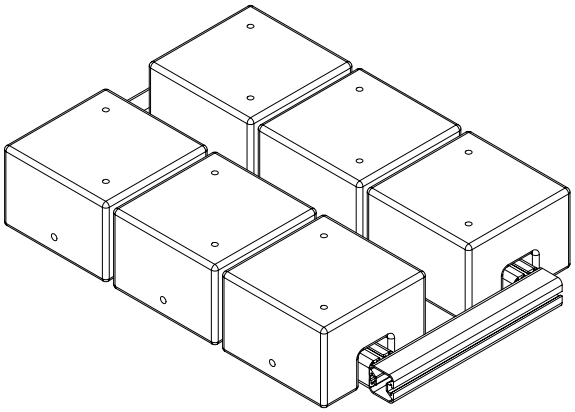

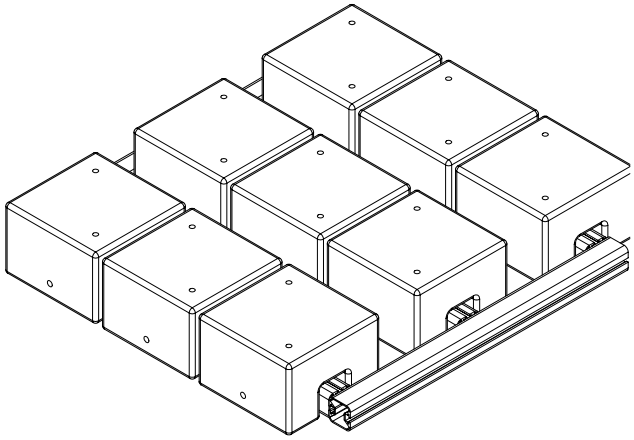

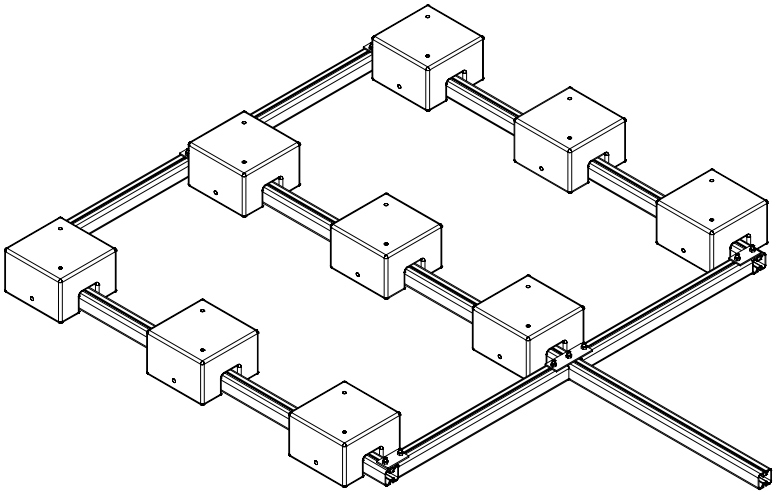

Max wind area	3 m2
Operational wind	15 m/s
Survival wind	38 m/s
Application	BTS

Aerial Oy

Box 22
04401 Järvenpää
Finland

Tel. +358 9 2790 120
Fax +358 9 2910 210

http://www.aerial.fi
aerial@aerial.fi

Support for tubes with flange
AMRTXXX-YY-1000-Z

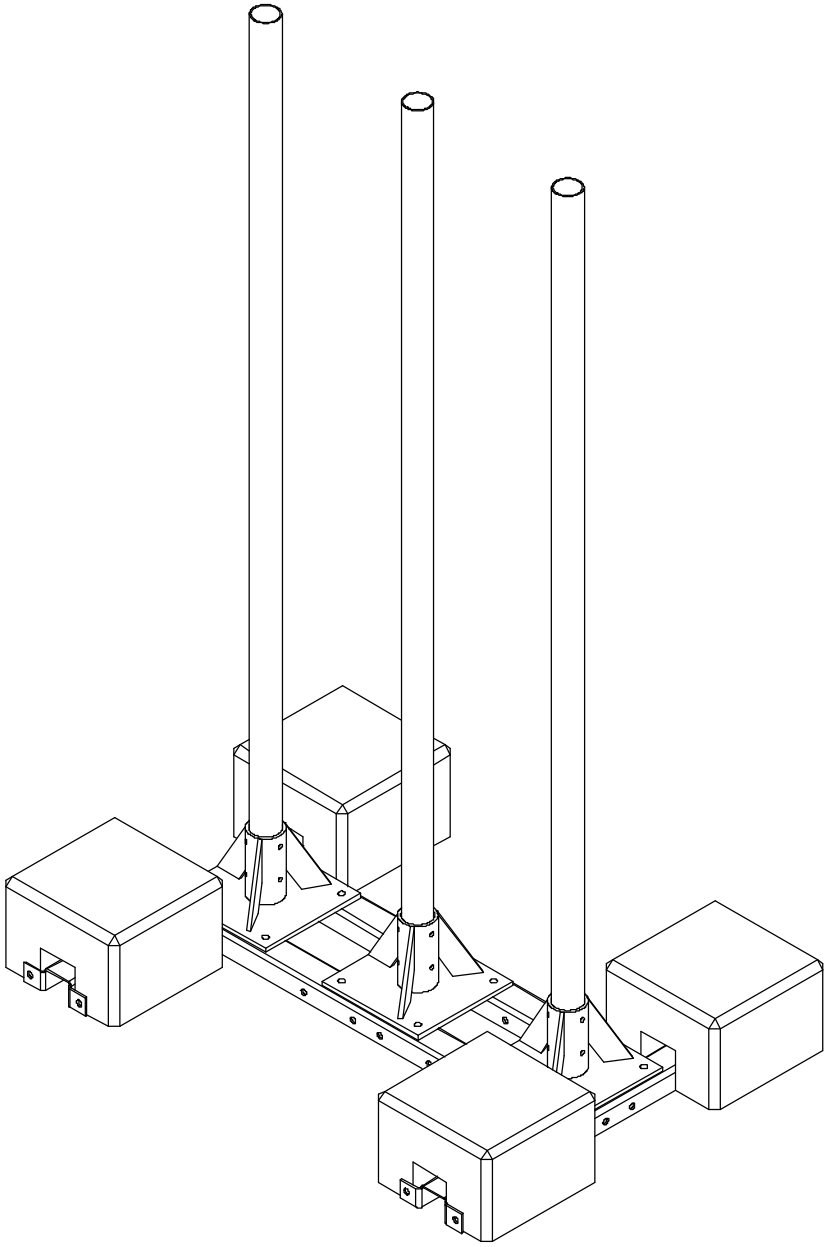

AMRT 100-3-1000-3

AMRTXXX-YY-1000-Z
XXX=tube diameter
YY=length of tubes
Z=number of tubes (1=1-3pcs,2=4-6pcs)

Tubes:	60.3 x2.9 tai 101.6x2.5mm
Lengths:	1...6m
Material:	Fe52D Hzn
Options:	Material: Aluminium Painting Hinges

Aerial Oy
Box 22
04401 Järvenpää
Finland
Tel. +358 9 2790 120
Fax +358 9 2910 210
http://www.aerial.fi
aerial@aerial.fi

AMRT100-3D

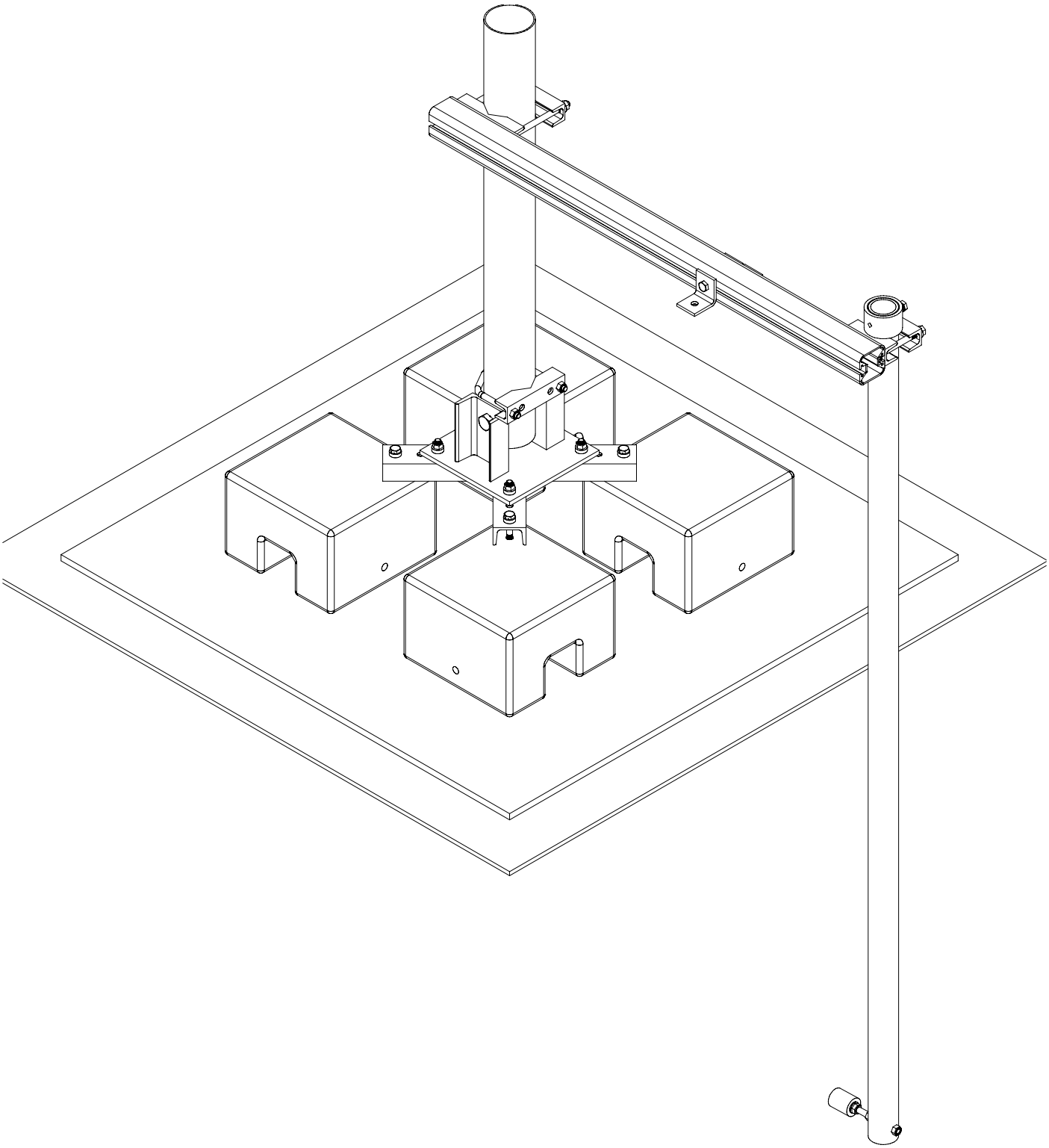

Aerial Oy
Box 22
04401 Järvenpää
Finland
Tel. +358 9 2790 120
Fax +358 9 2910 210
http://www.aerial.fi
aerial@aerial.fi

AMRT100-3E

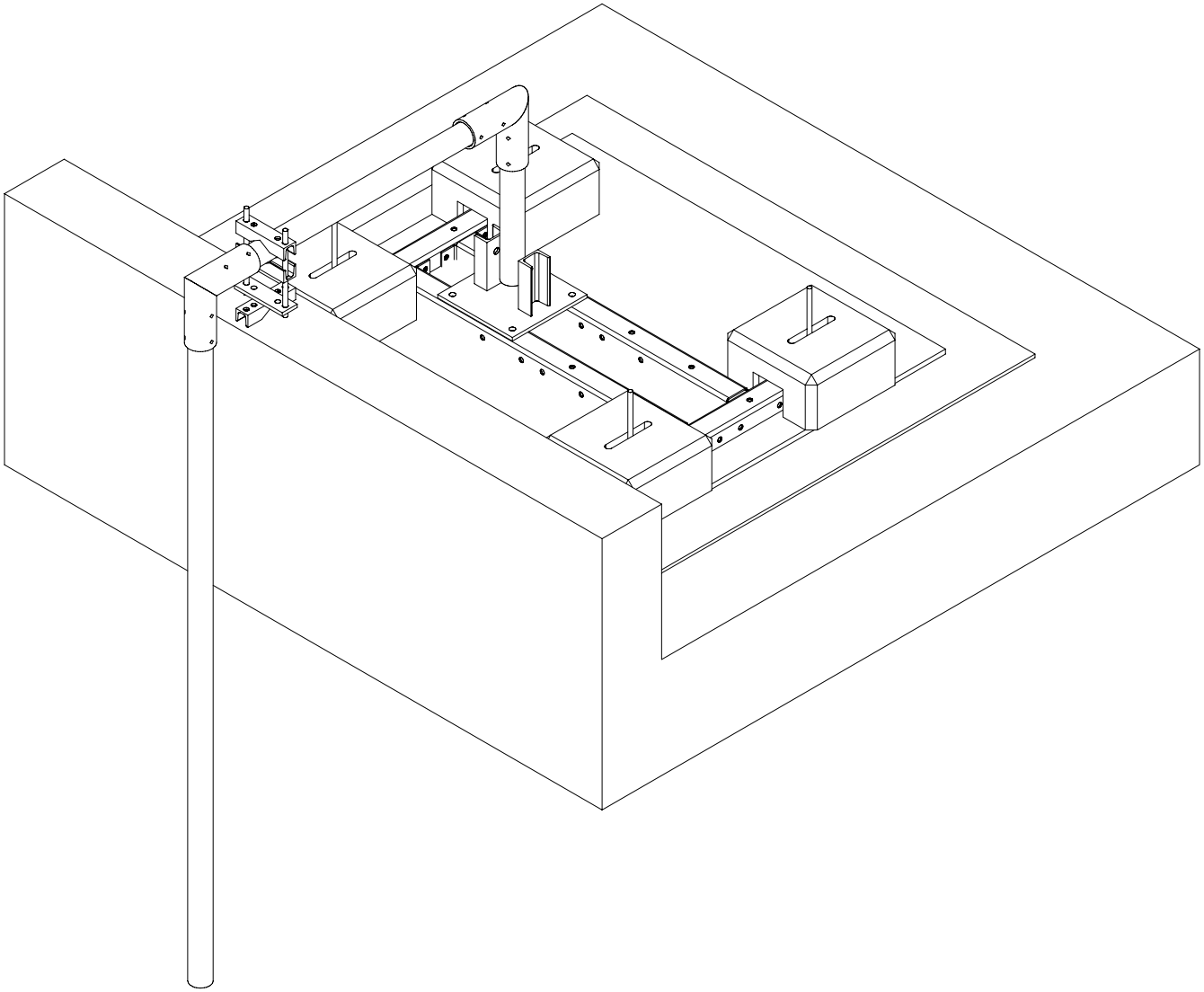

Aerial Oy
Box 22
04401 Järvenpää
Finland
Tel. +358 9 2790 120
Fax +358 9 2910 210
http://www.aerial.fi
aerial@aerial.fi

AMRT100-3F

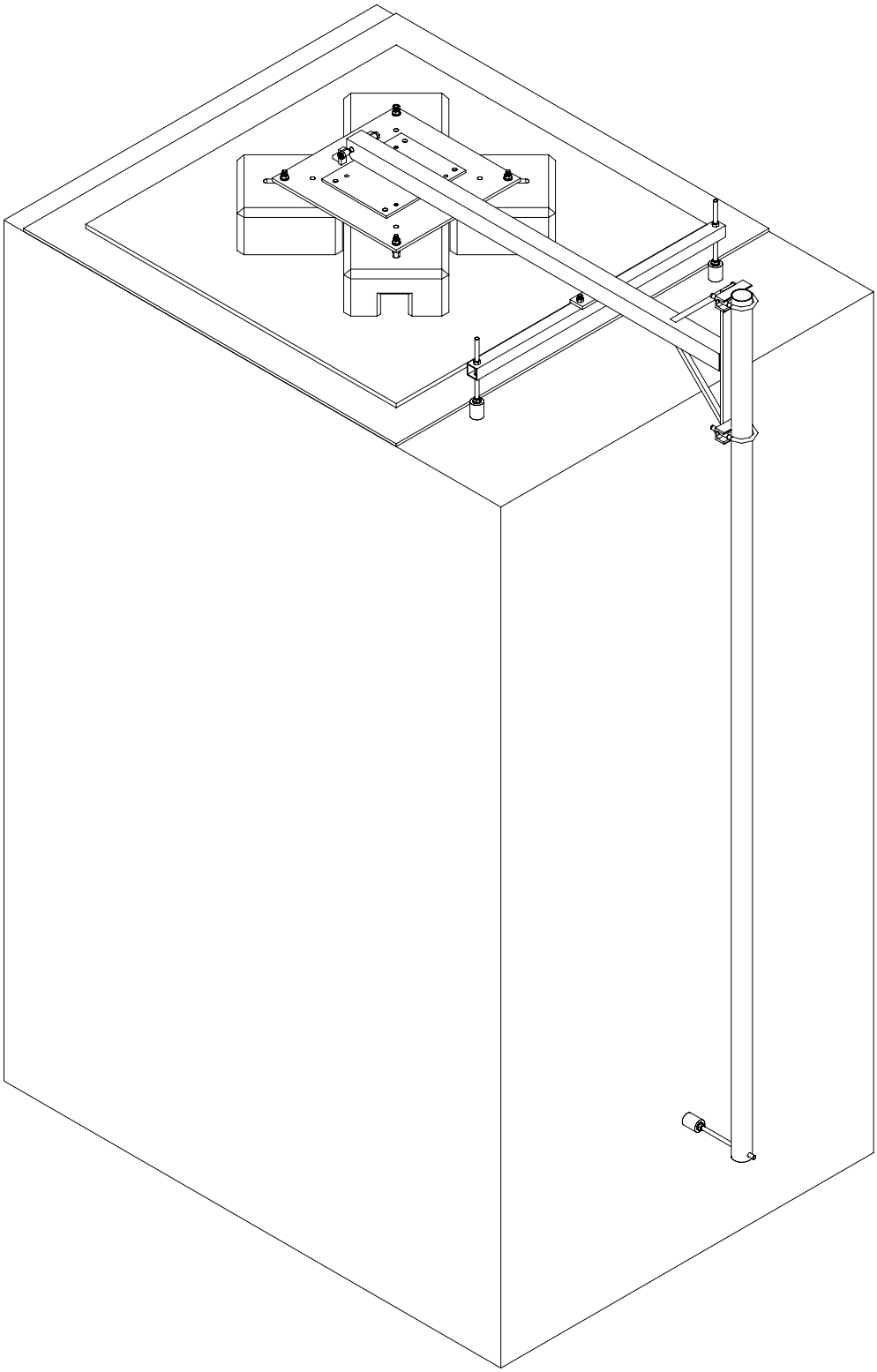

Aerial Oy

Box 22
04401 Järvenpää
Finland

Tel. +358 9 2790 120
Fax +358 9 2910 210

http://www.aerial.fi
aerial@aerial.fi

Guy wire collar
AMGXXX-Y

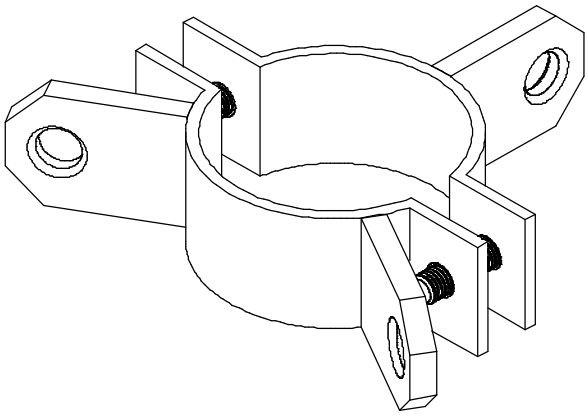

AMG100-3

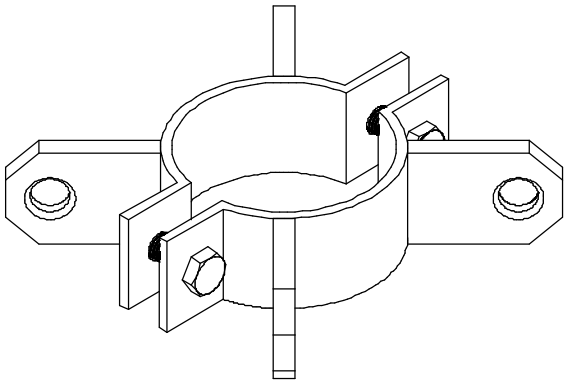

AMG100-4

AMGXXX-Y
XX=tube diameter
Y=number of guy wires

Tubes:	60 ja 100mm
Material:	Fe52D Hzn
Options:	painting

Aerial Oy
Box 22
04401 Järvenpää
Finland
Tel. +358 9 2790 120
Fax +358 9 2910 210
http://www.aerial.fi
aerial@aerial.fi

Collar

AMG3 JA AMG4

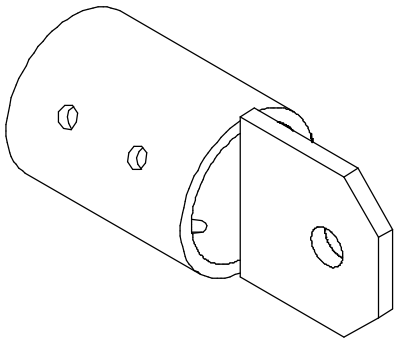

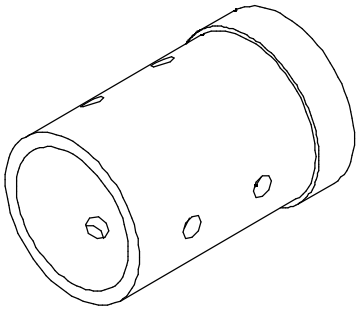

AMG3 Collar
AMG4 Collar

Tube:	60
Material:	Fe52D Hzn
Option:	Painting

Aerial Oy

Box 22
04401 Järvenpää
Finland

Tel. +358 9 2790 120
Fax +358 9 2910 210

http://www.aerial.fi
aerial@aerial.fi

Mounting collar
ASRTXXX-1

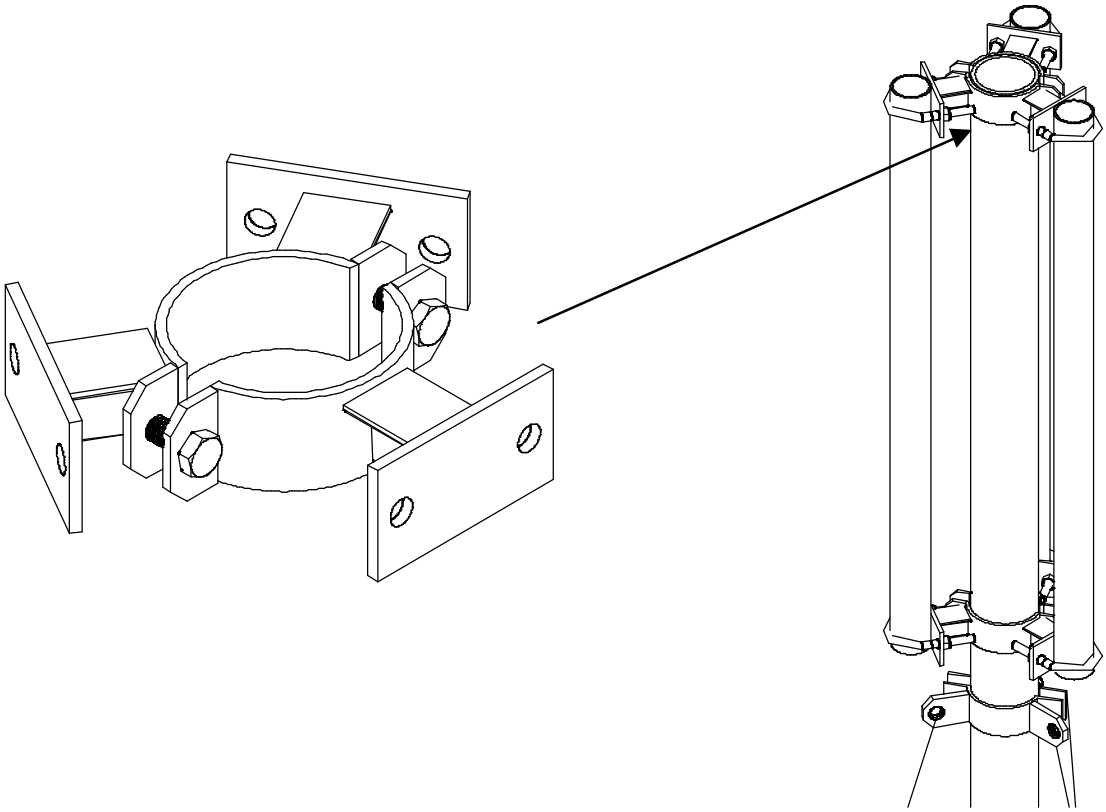

ASRTXXX-1	
XXX=tube diameter	
Tube:	60 jand 100mm
Tube mounting size:	max. Ø60mm
Material:	Fe52D Hzn
Option:	painting

Aerial Oy
Box 22
04401 Järvenpää
Finland
Tel. +358 9 2790 120
Fax +358 9 2910 210
http://www.aerial.fi
aerial@aerial.fi

Antenna mounting frame
AMRT xxx-2

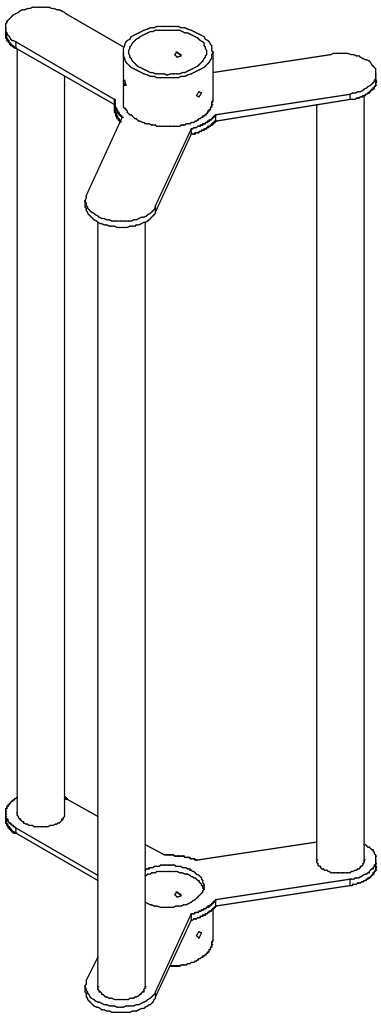

AMRT XXX-2
XXX=tube diameter

Tube:	60 ja 100mm
Tube installlation size:	max. Ø60mm
Length	max 1500 mm
Material:	Al
Option:	Painting

Aerial Oy
Box 22
04401 Järvenpää
Finland
Tel. +358 9 2790 120
Fax +358 9 2910 210
http://www.aerial.fi
aerial@aerial.fi

Ladder collar
ASRT100-60-2

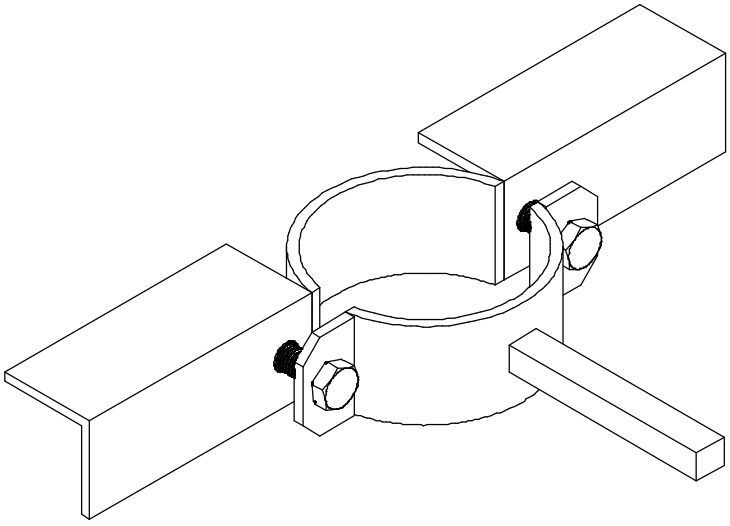

Tyyppi	ASRT100-60-2
Weigth	1,9 kg
Tube	100mm
Material	Fe52D Hzn
Option	Material (Al) Painting

Aerial Oy

Box 22
04401 Järvenpää
Finland

Tel. +358 9 2790 120
Fax +358 9 2910 210

http://www.aerial.fi
aerial@aerial.fi

Tube base plate with tilt plate
AMTPL250-250-1

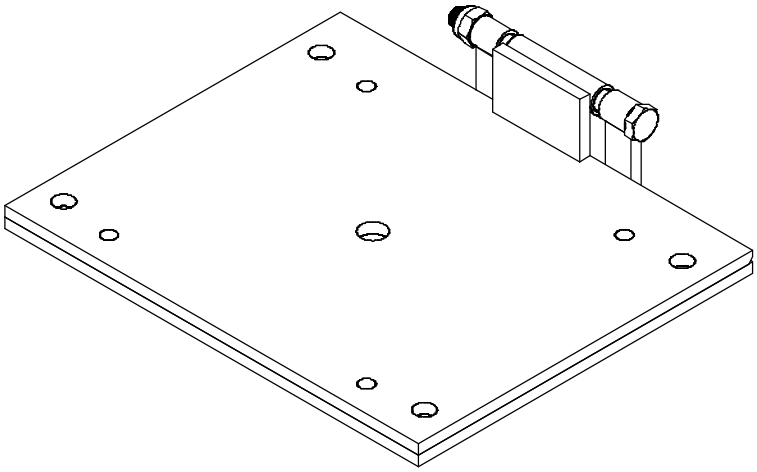

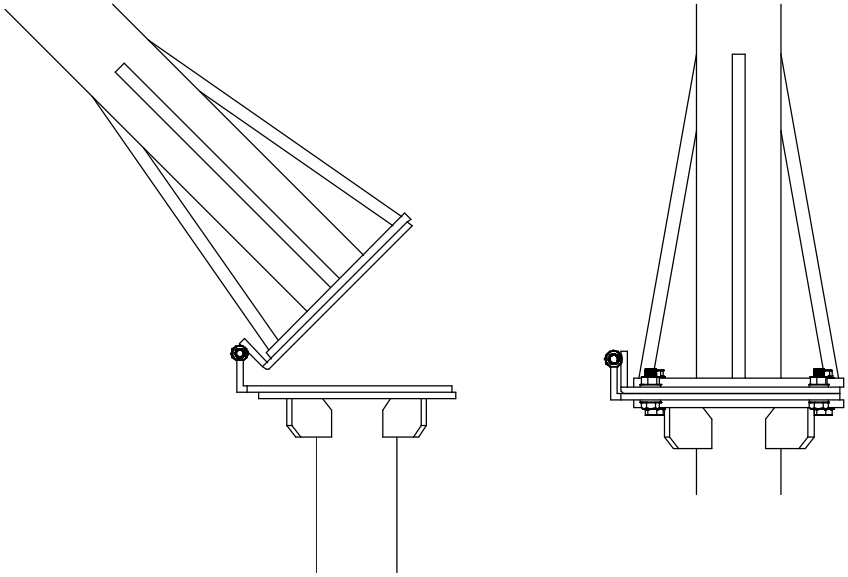

Tyyppi	AMFT500-250-1
Weigth	11 kg
Size	250*250*10 mm
Material	Fe52D Hzn
Option	Material (Al) Painting

Aerial Oy

Box 22
04401 Järvenpää
Finland

Tel. +358 9 2790 120
Fax +358 9 2910 210

http://www.aerial.fi
aerial@aerial.fi

Tube mast base plate
AEFTXX-250-1

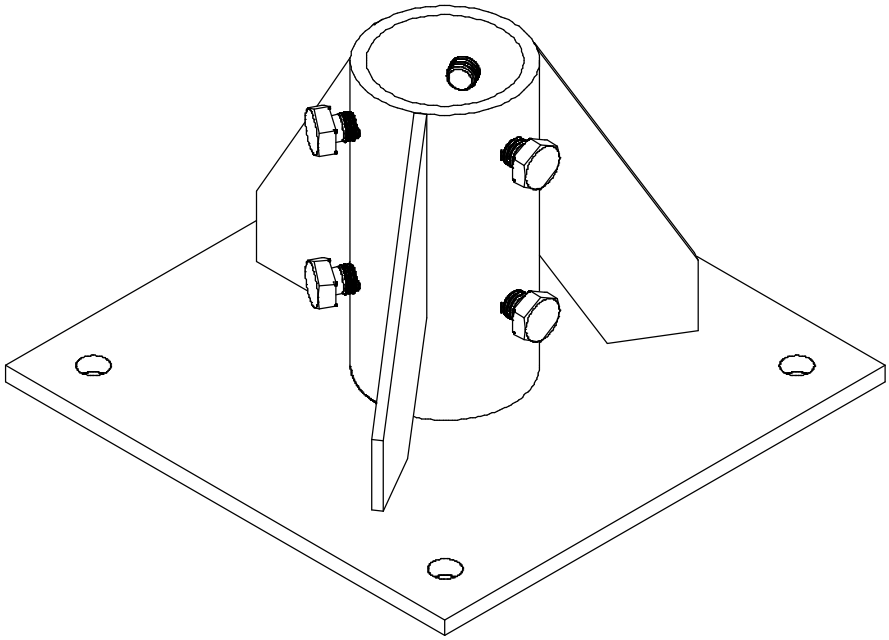

Tyyppi	AEFTXXX-250-1 XXX=putkikoko[mm]
Weigth	6.5 kg
Tube	60 or 100mm
Material	Fe52D Hzn
Option	Material (Al) Painting

Aerial Oy
Box 22
04401 Järvenpää
Finland
Tel. +358 9 2790 120
Fax +358 9 2910 210
http://www.aerial.fi
aerial@aerial.fi

Concrete weight 30 KG
AMB300-300-30

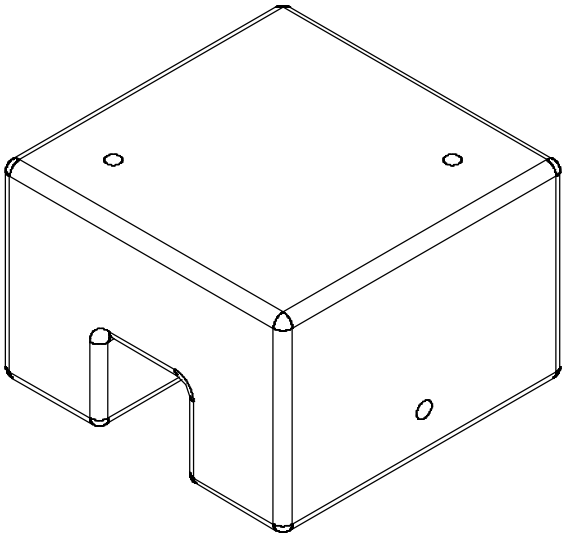

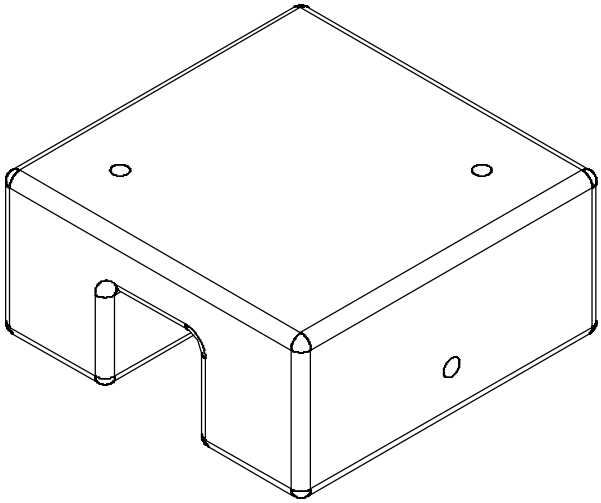

Tyyppi	AMB300-300-XX XX=paino[kg]
Weigth	25/38kg
Dimensions	300x300x140mm (25kg) 300x300x200mm (38kg)

Aerial Oy

Box 22
04401 Järvenpää
Finland

Tel. +358 9 2790 120
Fax +358 9 2910 210

http://www.aerial.fi
aerial@aerial.fi

Chimney mounts

In the course of time Aerial has produced a considerable selection of different kinds of mounting clamps and accessories. Suitable ones can also be found for for example chimney installations. Decent anti-corrosive finishing prevents material damages in often problematic corrosive and high temperature fumes.

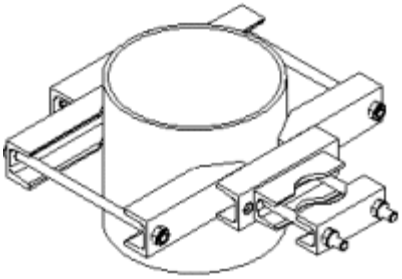

Support for chimney
AMRTXXX-YY-AAxBB

AMRT100-6-1000*1000

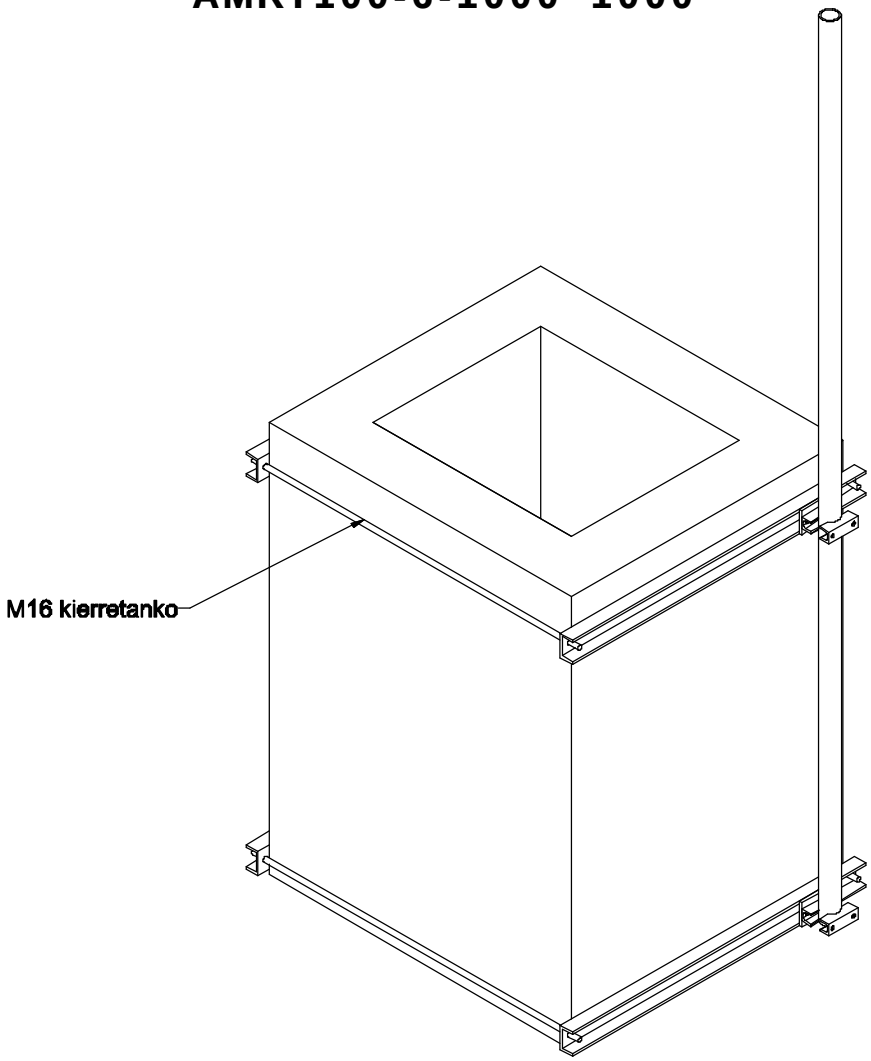

AMRTXXX-YY-AA-BB
XXX=tube diameter
YY=length of tube
AaxBB= breadth x depth [mm]

Tubes:	60.3 x2.9 or 101.6x2.5mm
Length:	0-6m
Materiaali:	Alumiini AlMgSiT6
Optiot:	Material: Fe52D Hzn , Rst Painting

Aerial Oy
Box 22
04401 Järvenpää
Finland
Tel. +358 9 2790 120
Fax +358 9 2910 210
http://www.aerial.fi
aerial@aerial.fi

AM10 PORTAC

Height	10 m (available upto 15 m)
Elements	1,5 m
Guy radius	3 m
Colour	Nato green
Mast material	Glassfiber, aluminium, guy anchors hot dip galvanized steel
Guys	Green rope, Ø8 mm, breaking strength 510 kg
Weight	30 kg (with transportation bag)

Aluminium tripod with adjustable telescopic feet for rough terrain.

AM8 TELTAC

The mast is erected with a winch. Electric motor can be used to speed up the lifting.

Height	From 6 m upto 15 m
Mast material	Aluminium, guy anchors hot dip galvanized steel
Guys wires	On demand,green rope, Ø8 mm, breaking strength 510 kg
Color	Nato green

Vehicle mounting also available

Aerial Oy
Box 22
04401 Järvenpää
Finland

Tel. +358 9 2790 120
Fax +358 9 2910 210
http://www.aerial.fi
aerial@aerial.fi

Your representative:

Platform-triangle

Length of one side 2,5...3m

Aerial Oy
Box 22
04401 Järvenpää
Finland
Tel. +358 9 2790 120
Fax +358 9 2910 210
http://www.aerial.fi
aerial@aerial.fi

Platform-square

Length of one side 2...3 m

Aerial Oy
Box 22
04401 Järvenpää
Finland
Tel. +358 9 2790 120
Fax +358 9 2910 210
http://www.aerial.fi
aerial@aerial.fi

Platform-base

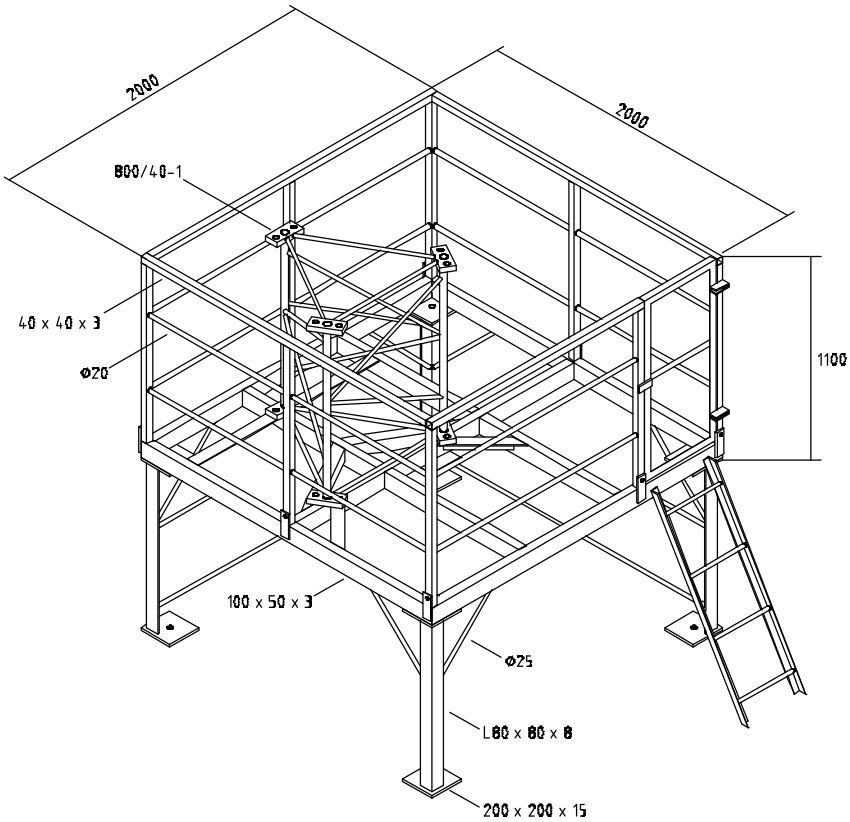

Size 4...9 m2

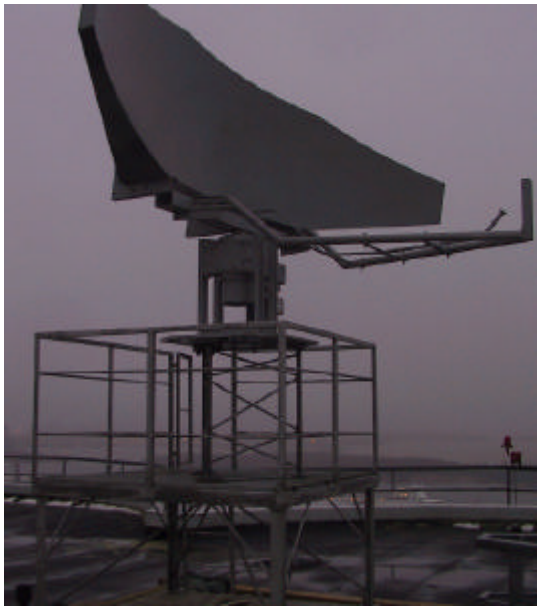

Aerial Oy
Box 22
04401 Järvenpää
Finland
Tel. +358 9 2790 120
Fax +358 9 2910 210
http://www.aerial.fi
aerial@aerial.fi

Other masts

As a mast product supplier Aerial Oy is very flexible. Thanks to state of the art design tools and software Aerial can offer steel structures for various different purposes. And mast analysis will always bring on the most economic and convenient alternative.

Camera masts

Commonly, camera masts are either 6 m, 8 m or 10 m tall. The camera itself is installed on a flange piece (picture on the right) which can be mounted on top of a M400/20 mast element.

Typical 10 m camera mast consists of:

- Camera flange piece
- M400/20-4 mast element
- M500/25-6 mast element

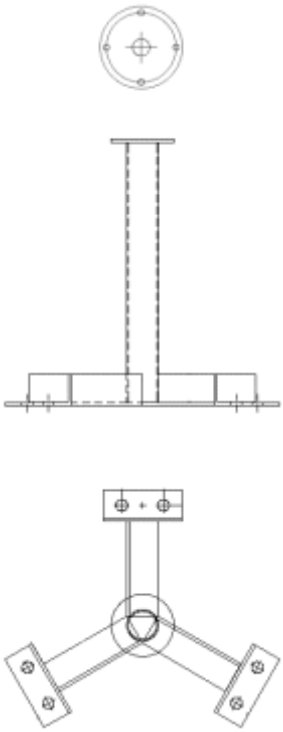

Lighting towers

Commonly, lighting towers are either 6 m, 8 m or 10 m tall. The lighting device is installed on a railing of a mounting platform (picture on the right) which can be mounted on top of a M400/20 mast element.

Typical 10 m lighting tower consists of:

- Mounting platform
- M400/20-4 mast element
- M500/25-6 mast element

Lighting frame

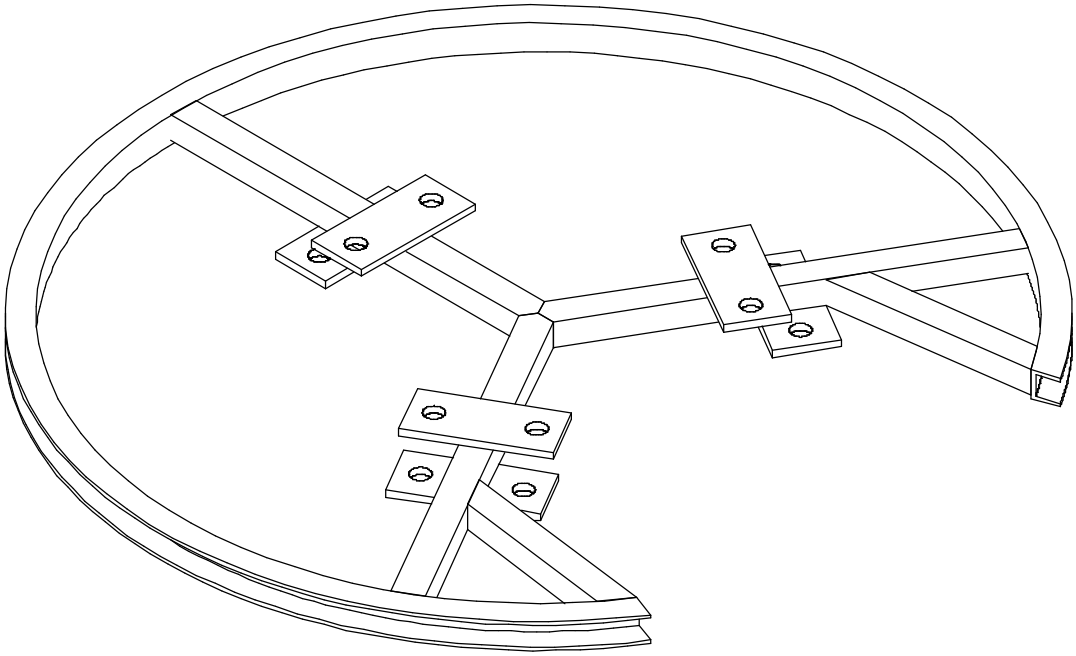

Aerial Oy
Box 22
04401 Järvenpää
Finland
Tel. +358 9 2790 120
Fax +358 9 2910 210
http://www.aerial.fi
aerial@aerial.fi

Lightning installation serie

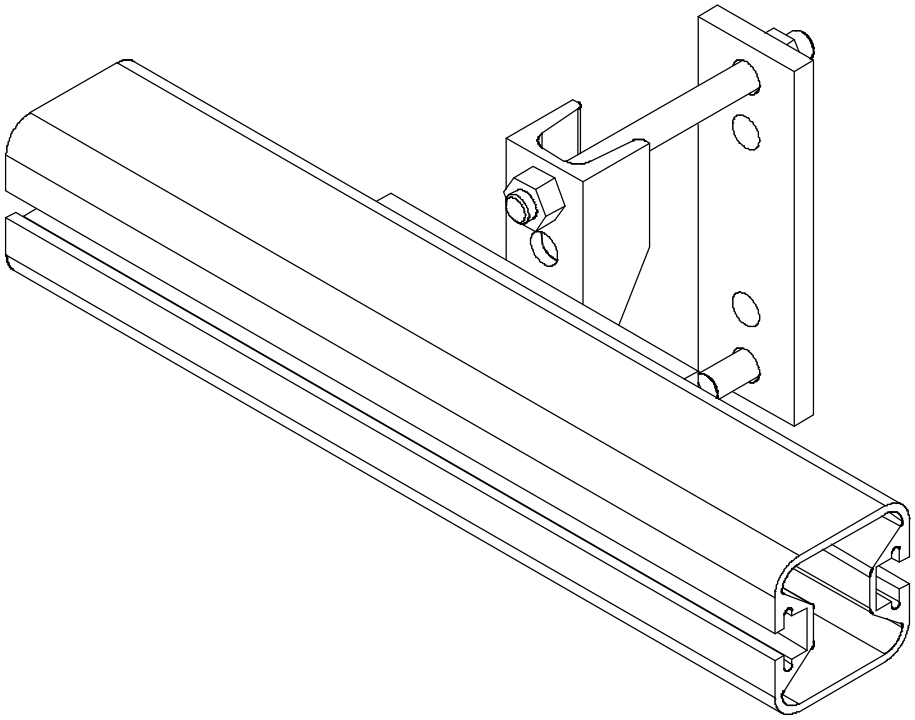

Aerial Oy
Box 22
04401 Järvenpää
Finland
Tel. +358 9 2790 120
Fax +358 9 2910 210
http://www.aerial.fi
aerial@aerial.fi

Lighting platform

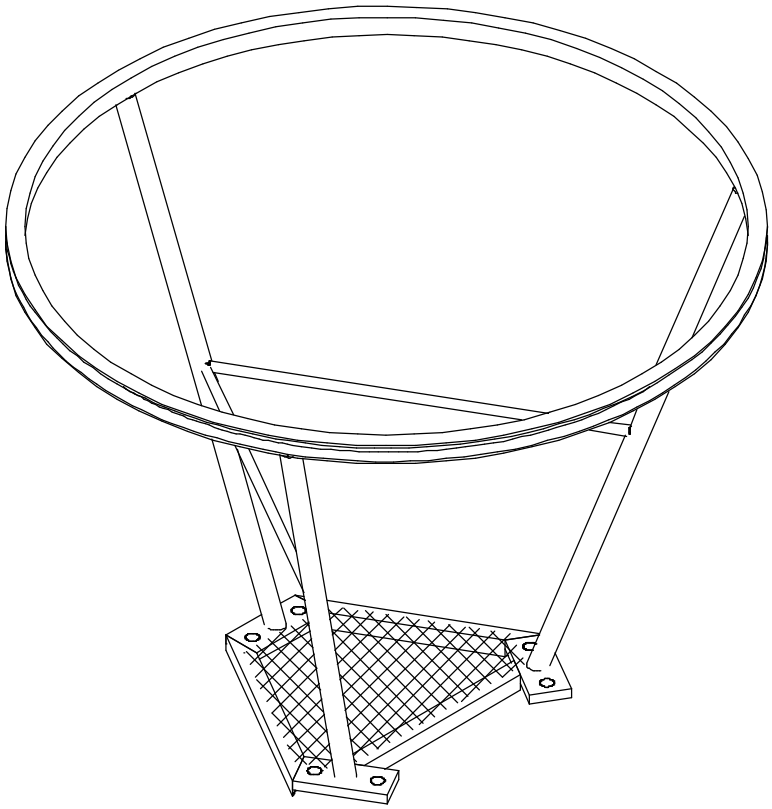

Aerial Oy
Box 22
04401 Järvenpää
Finland
Tel. +358 9 2790 120
Fax +358 9 2910 210
http://www.aerial.fi
aerial@aerial.fi

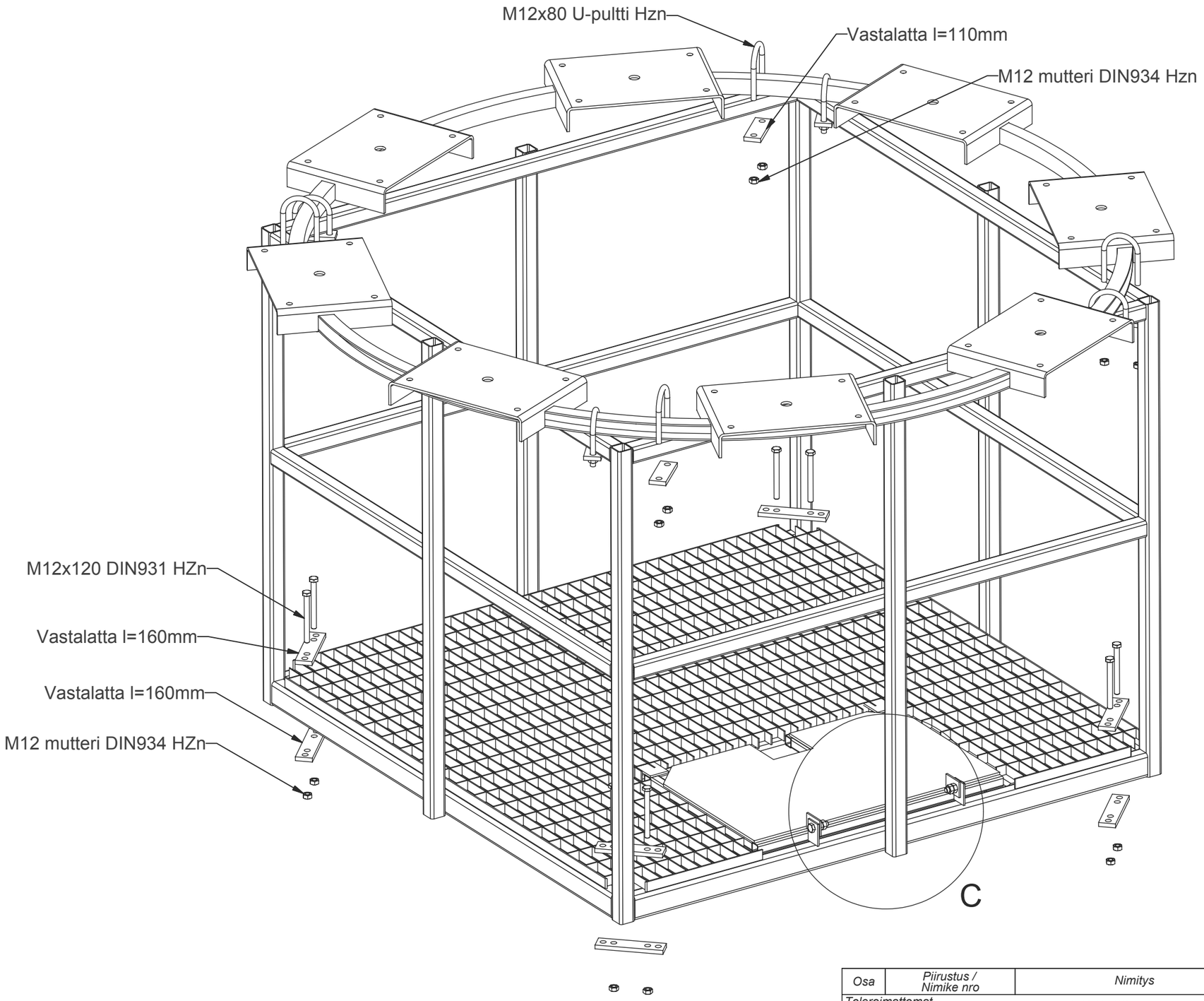

C (1 : 5)

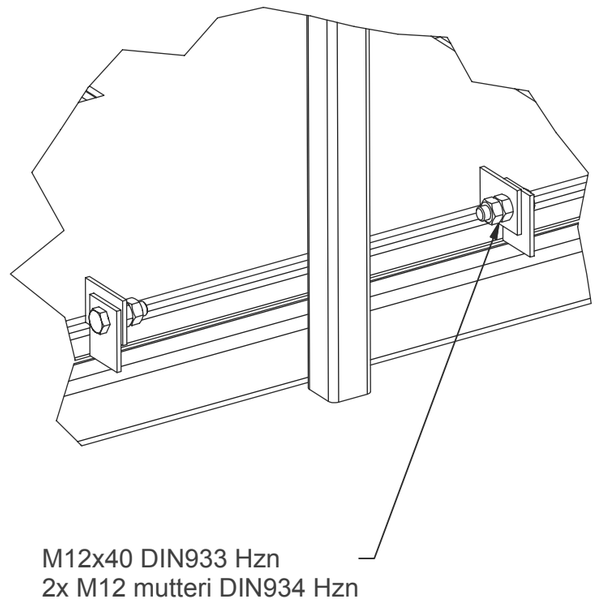

Osa	Piirustus / Nimike nro	Nimitys	Muoto,malli	Määrä	Laatu	Standardi	Kpl

Toleroimattomat mitat	ISO 2768-medium		
Pintakäsittely	Kuumasinkitys SFS-EN 12329	Väritys	-
Status	WorkInProgress	Tuote	M1400
Massa	145,9 kg		
Suunn.	18.9.2006 arno	Mittakaava	
Nimike nro	valaisinkori d2000		
Tark.		Liittyy	
Korvaa			
Aerial Oy Pietolankatu 9, 04400 Järvenpää tel. +358-9-2790120, fax +358-9-2910210 www.aerial.fi		Nimitys	Valaisinkori D2000 Kokoonpano
Piirustus nro			
Malli	valaisinkori d2000.iam	Piirustus	valaisinkori d2000-ohje.idw
Sivu	2 / 2	Koko	A3

Rev	Kuvaus	Tekijä	Pvm

OBSTRUCTION LIGHT OL150-1SL

Type	OL150-1SL
Illuminating power	10 cd minimum
Light source	Philips 20W PLE lamp or similar Age 10 000 h Electronic ignition Tremor damped
Cable lead-through	Pk 16 (2 pcs)
Dimensions (H x W x D)	350 x 550 x 200 mm
Weight	2,7 kg
Mounting diameter	∅ 30…115 mm pipe
Materials	Aluminium framework UV-stabilated macrolon lamp cover
Options	SSL 10 / 230 LED lamp light source Age 100 000 h

OL150-1SL includes mounting kit and Philips 20 W PLE lamp by default

Aerial Oy

Box 22
04401 Järvenpää
Finland

Tel. +358 9 2790 120
Fax +358 9 2910 210

http://www.aerial.fi
aerial@aerial.fi

OBSTRUCTION LIGHT OL150-HQL

Type	OL150-HQL
Illuminating power	10 cd minimum
Light source	Philips HPL-N 80W Electronic ignition Tremor damped
Cable lead-through	Pk 16 (2 pcs)
Dimensions (H x W x D)	350 x 550 x 200 mm
Weight	2,7 kg
Mounting diameter	∅ 30…115 mm pipe
Materials	Aluminium framework UV-stabilated macrolon lamp cover
Options	-

Aerial Oy
Box 22
04401 Järvenpää
Finland
Tel. +358 9 2790 120
Fax +358 9 2910 210
http://www.aerial.fi
aerial@aerial.fi

OBSTRUCTION LIGHT OL 150-LED 230V

Type	OL 150-LED 230V
Illuminating power	10 cd minimum (14 cd typical)
Light source	Inxlight-01 230-E27 LED Life time 100 000 hours
Cable lead-through	Pk 16 (2 pcs)
Dimensions (H x W x D)	350 x 550 x 200 mm
Weight	2,7 kg
Mounting diameter	∅ 30…115 mm pipe
Materials	Aluminium framework UV-stabilated macrolon lamp cover
Options	-

Obelux 230-E27 LED
Light source key features:

- Long lifetime and maintenance intervals
- Low power consumption – less than 9 VA
- Low energy costs
- Low total lifetime costs
- 230 VAC nominal supply voltage
- Typical intensity 14 cd
- Light output degradation less than 30% after 100 000 hours of operation
- 5 years warranty

Specifications met:

- ICAO International standards and recommended practises: Aerodromes – Annex 14 Volume 1, 3rd edition, July 1999, Chapter 6; Low-intensity, Type A Obstacle light

Aerial Oy
Box 22
04401 Järvenpää
Finland
Tel. +358 9 2790 120
Fax +358 9 2910 210
http://www.aerial.fi
aerial@aerial.fi

230 V_{AC} BMVBW Hindernisfeuer 10 cd / 2003 and ICAO Low-intensity, Type A Obstacle Light, replacement unit

Key features
- Based on LED technology
- Extremely reliable - long lifetime
- Very low power consumption
- 230 V AC nominal supply voltage
- Intensity 18 cd typical
- Stabilised light output
- Easy to install
- No RF-radiations
- Safe and easy to use

Obelux 10-230-E27-D

Benefits
- Long maintenance intervals
- Low energy cost
- Supply power voltage variations do not affect to light output
- Very low total lifetime costs
- Comes with five (5) years warranty

Specifications met
- BMVBW Hindernisfeuer 10 cd / 2003
- ICAO International Standards and Recommended Practices: Aerodromes - Annex 14 Volume 1, 3rd Edition, July 1999, Chapter 6: Low-intensity, Type A Fixed Obstacle Light

Optical characteristics
- Intensity better than 10 cd
- Colour aviation red
- Horizontal radiation pattern 360°
- Vertical radiation pattern 50°
- LED supply current stabilised by constant current generator
- Light output degradation less than 30% after 100.000 h of operation

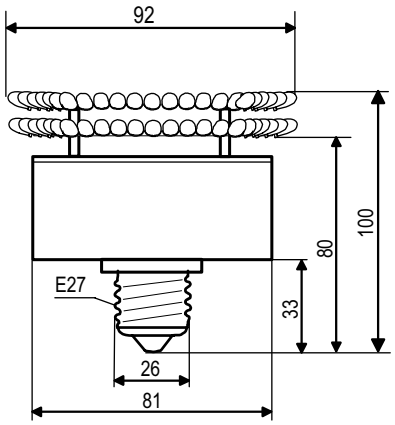

Electrical characteristics
- LEDs in several separate groups
- Nominal operating voltage 230 V_{AC}
- Power consumption less than 10 VA
- Operating voltage range 210 to 250 V_{AC}
- Internal 230 V_{AC} / 48 V_{DC} power supply
- Two-stage over-voltage protection

Mechanical characteristics
- Yellow ABS+PC body
- Degree of protection IP 30
- Operating temperature range –55°C to +55°C
- Height 100 mm, diameter 92 mm, weight 0,4 kg

Ordering Code: **Obelux 10-230-E27-D**

Made in Finland

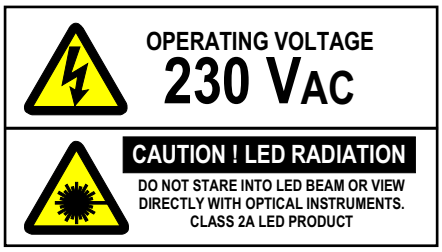

Technical information in this document is subject to change without notice. Copyright © Obelux Oy 2004

Obelux Oy
Kutomotie 6 B
FI-00380 Helsinki
Finland

tel: +358 50 1999
fax: +358 9 621 5518
internet: www.obelux.com
e-mail: info@obelux.com

230 V_{AC} ICAO Low-intensity, Type A Obstacle Light

Key features
- Based on LED-technology
- Extremely reliable - long lifetime
- Suitable for off-shore use
- Very low power consumption
- 230 V_{AC} nominal operating voltage
- Stabilised light output
- Lightweight and small – low wind load factor
- Easy to install, several mounting sets available
- Two gable glands, easy to chain without external terminal boxes
- No RF-radiations
- Five (5) years warranty

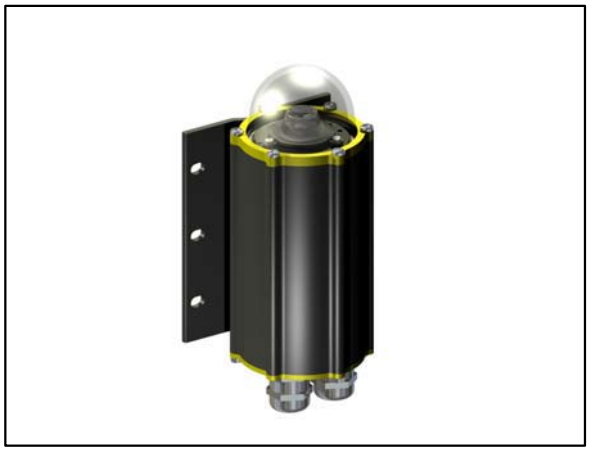

Obelux LI-10-230-F LED obstacle light

Benefits
- Long maintenance intervals
- Low energy cost
- Supply power voltage variations do not affect to light output
- Very low total lifetime costs
- Low wind load

Specifications met
- ICAO International Standards and Recommended Practices: Aerodromes - Annex 14 Volume 1, 3rd Edition, July 1999, Chapter 6: Low-intensity, Type A Fixed Obstacle Light

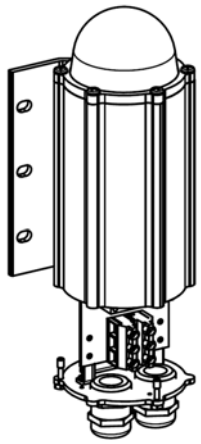

Optical characteristics
- Intensity better than 10 cd
- Colour aviation red
- Horizontal radiation pattern 360°
- Vertical radiation pattern 50°
- LED supply current stabilised by constant current generator
- Light output degradation less than 30% after 100.000 h of operation

Electrical characteristics
- Nominal operating voltage 230 V_{AC}
- Power consumption less than 3 VA, 1.5 W
- Operating voltage range 210 to 250 V_{AC}
- Over-voltage protection

Mechanical characteristics
- Anodized, marine grade aluminium body and end parts
- AISI 316 acid proof steel screws
- Colourless (clear) glass cover
- Terminal box for 1,5 - 6 mm^2 wires
- Degree of protection IP 65
- Operating temperature range –55°C to +55°C
- Height 210 mm, diameter 104 mm, weight 1.1 kg
- Wind load with MS-EV60 mounting kit @ 200 km/h less than 40 N

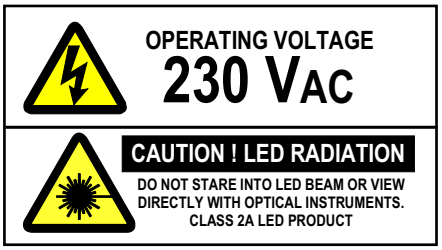

Options
- Mounting kits
- Light unit with Photocell & Flasher: Obelux LI-10-230-PCFL

Order Code: **Obelux LI-10-230-F**

Made in Finland

Technical information in this document is subject to change without notice. Copyright © Obelux Oy 2006

Obelux Oy
Kutomotie 6 B
FI-00380 Helsinki
Finland
tel: +358 50 1999
fax: +358 9 621 5518
internet: www.obelux.com
e-mail: info@obelux.com

10 - 60 V_{DC} ICAO Low-intensity, Type A Obstacle Light

Key features
- Based on LED-technology
- Extremely reliable - long lifetime
- Suitable for off-shore use
- Very low power consumption
- Wide 10 to 60 VDC input voltage
- Stabilised light output
- Lightweight and small – low wind load factor
- Easy to install, several mounting sets available
- Two gable glands, easy to chain without external terminal boxes
- No RF-radiations
- Five (5) years warranty

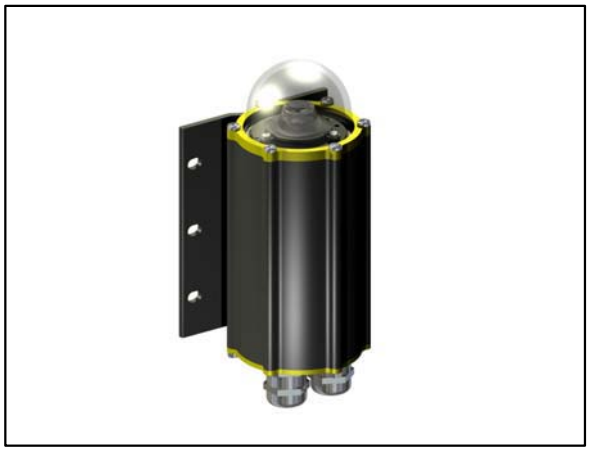

Obelux LI-10-DCW-F LED obstacle light

Benefits
- Long maintenance intervals
- Low energy cost
- Supply power voltage variations do not affect to light output
- Very low total lifetime costs
- Low wind load

Specifications met
- ICAO International Standards and Recommended Practices:
  Aerodromes - Annex 14 Volume 1, 3rd Edition, July 1999,
  Chapter 6: Low-intensity, Type A Fixed Obstacle Light

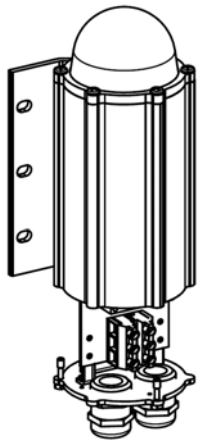

Optical characteristics
- Intensity better than 10 cd
- Colour aviation red
- Horizontal radiation pattern 360°
- Vertical radiation pattern 15°
- LED supply current stabilised by constant current generator
- Light output degradation less than 30% after 100.000 h of operation

Electrical characteristics
- Input voltage range 10 to 60 V_{DC}
- Power consumption less than 1.5 W
- Over voltage protection

Mechanical characteristics
- Anodized marine grade aluminium body and end parts
- AISI 316 acid proof steel screws
- Colourless (clear) glass cover
- Terminal box for 1,5 - 6 mm^2 wires
- Degree of protection IP 65
- Operating temperature range –55°C to +55°C
- Height 210 mm, diameter 104 mm, weight 1.1 kg
- Wind load with MS-EV60 mounting kit @ 200 km/h less than 40 N

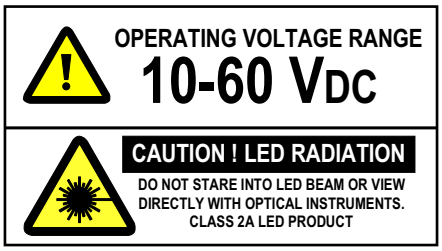

Options
- Mounting kits
- Photocell & Flasher: Obelux LI-10-DCW-PCFL

Order Code: **Obelux LI-10-DCW-F**

Made in Finland

Technical information in this document is subject to change without notice. Copyright © Obelux Oy 2006

Obelux Oy
Kutomotie 6 B
FI-00380 Helsinki
Finland
tel: +358 50 1999
fax: +358 9 621 5518
internet: www.obelux.com
e-mail: info@obelux.com

SAFETY RAIL SYSTEM ”TARMO”

"TARMO" is an EN approved safety rail system which is especially designed for aluminium masts. The car element is light in weight and compact.

In addition to the Tarmo car itself the system includes aluminium I-profile safety rail, mounting clamps for various mounting environments, extension parts, rail end car stoppers... everything you need.

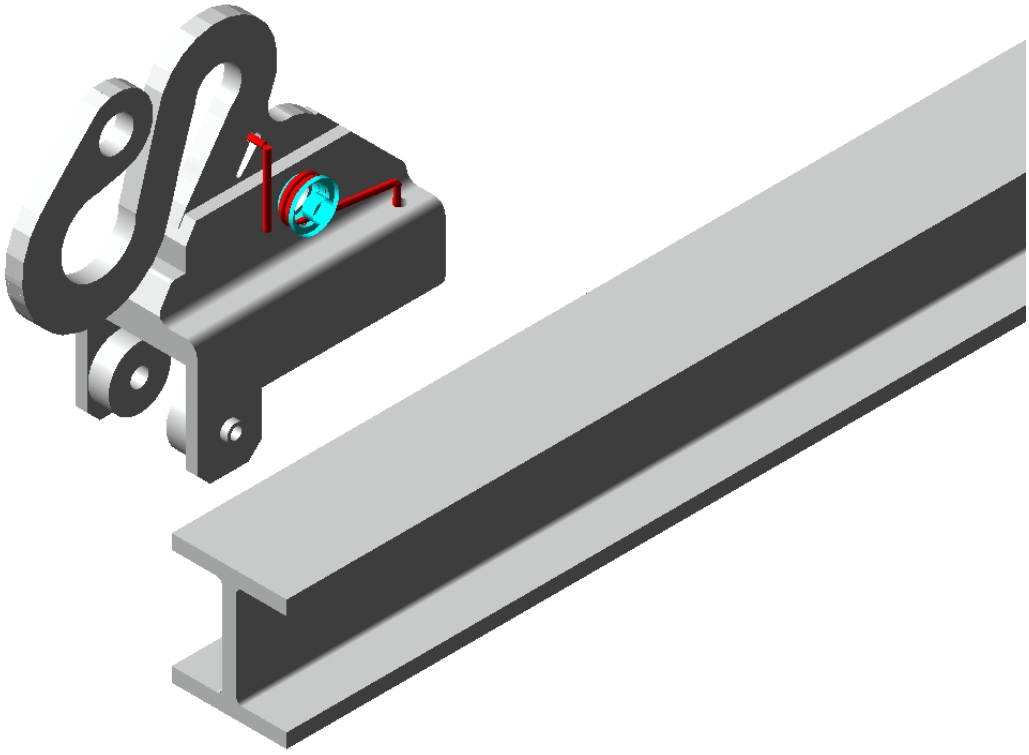

Type	Safety rail system "TARMO"
Safety rail dimensions	45 x 40 x 5 mm
Safety rail material	Aluminium
Car element weight	1,2 kg
Car element material	Hot dip galvanized steel
EN approved EN 353-1 1996/0403	

Aerial Oy
Box 22
04401 Järvenpää
Finland
Tel. +358 9 2790 120
Fax +358 9 2910 210
http://www.aerial.fi
aerial@aerial.fi

Anti Climbing device for guyed mast 500/30, 700/40, 800/40, 800/50

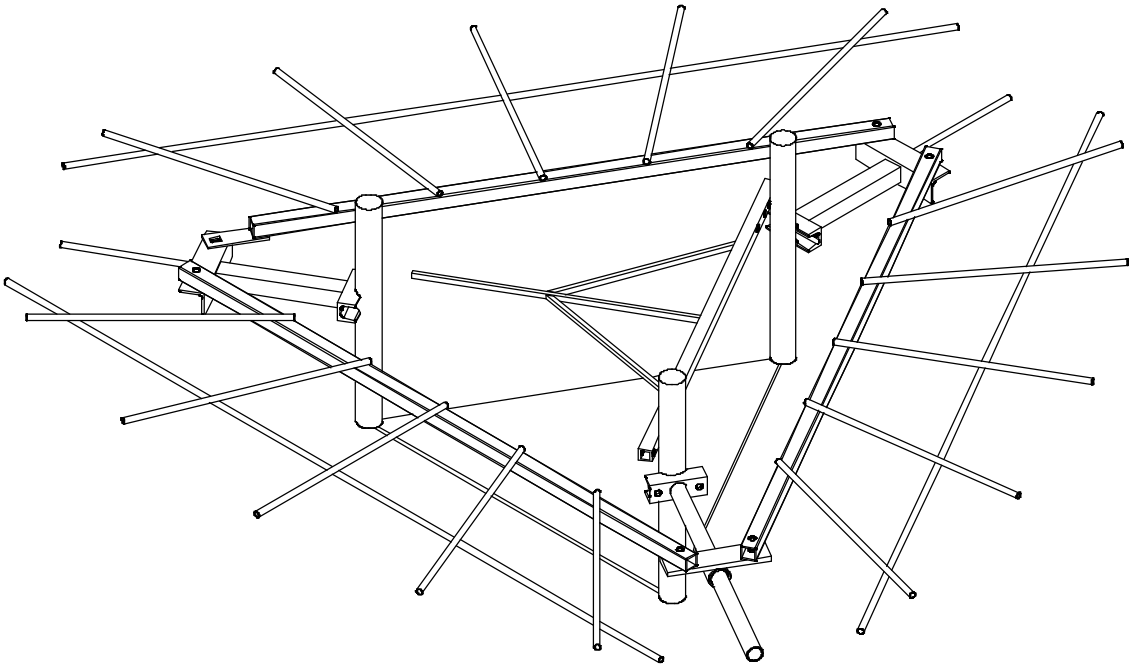

Aerial Oy
Box 22
04401 Järvenpää
Finland
Tel. +358 9 2790 120
Fax +358 9 2910 210
http://www.aerial.fi
aerial@aerial.fi

Anti climbing device for tube mast

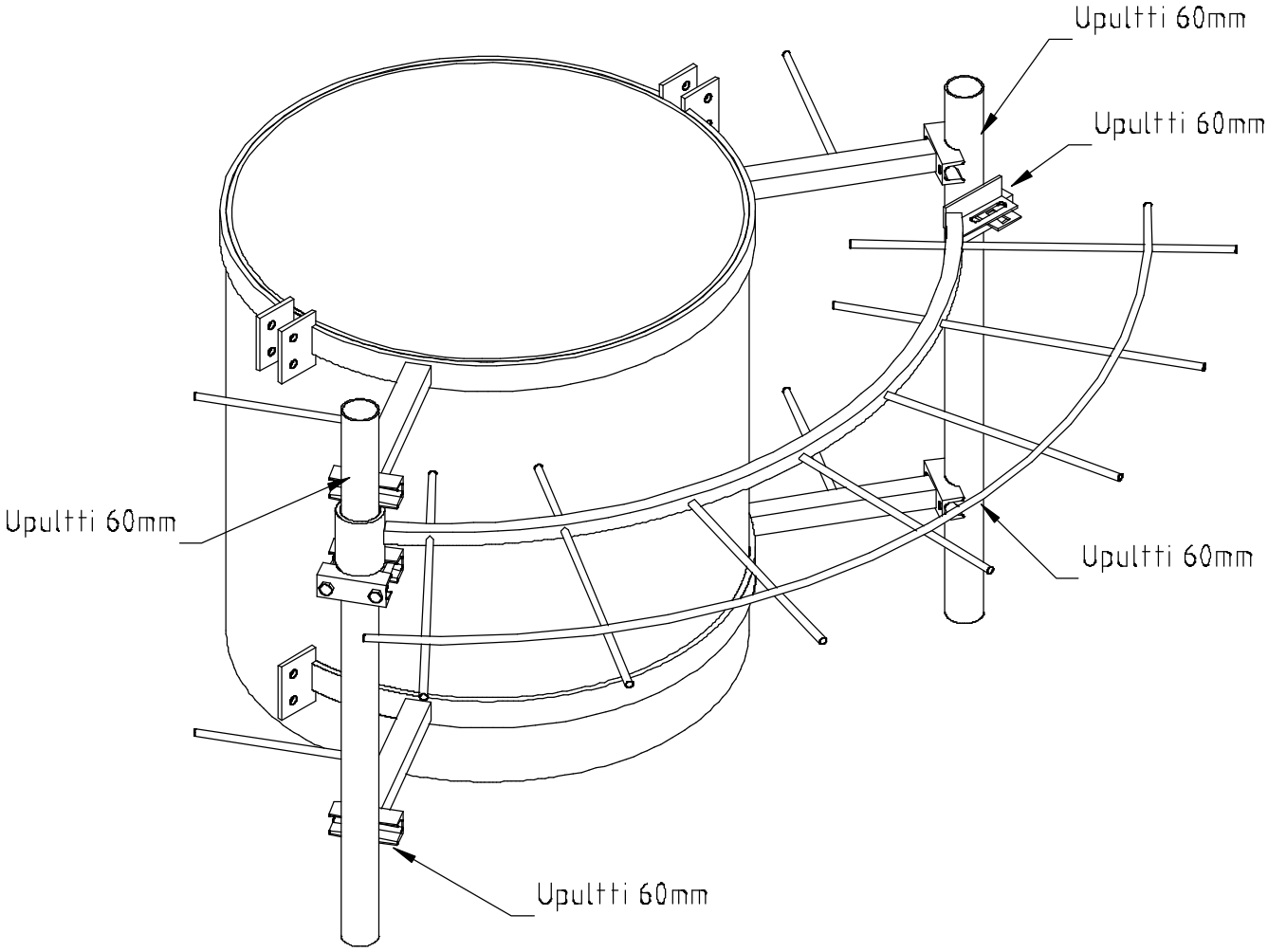

Aerial Oy
Box 22
04401 Järvenpää
Finland
Tel. +358 9 2790 120
Fax +358 9 2910 210
http://www.aerial.fi
aerial@aerial.fi

Anti climbing device for tower 1200/42, 1400/45, 1533/50/1666/50

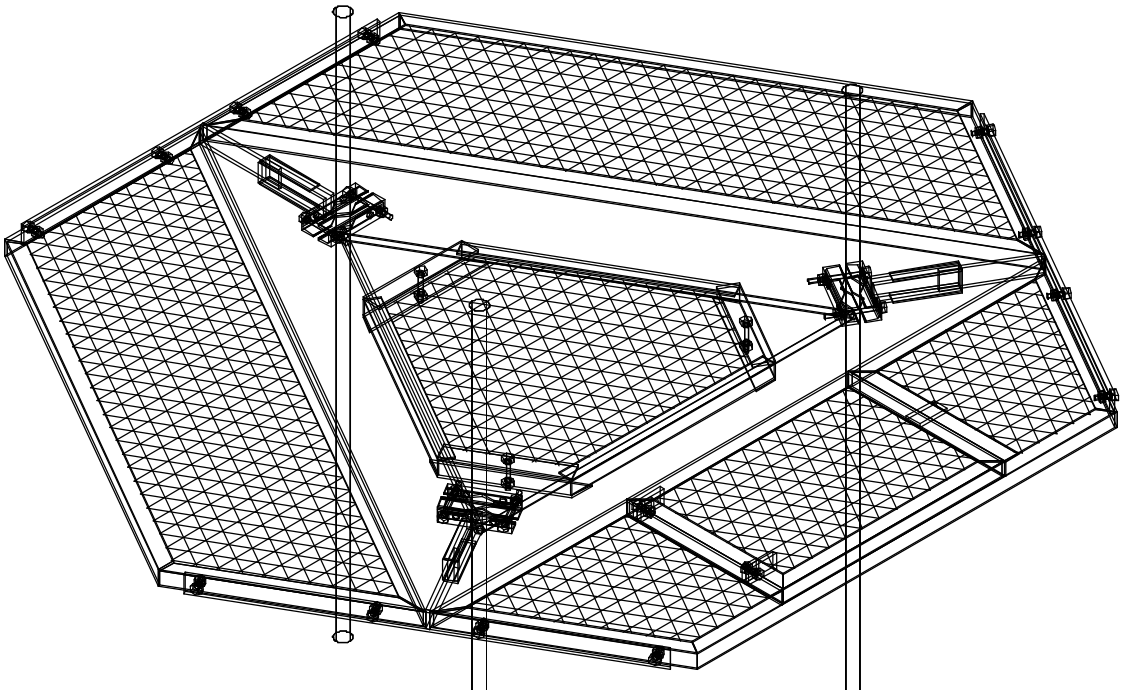

Aerial Oy
Box 22
04401 Järvenpää
Finland
Tel. +358 9 2790 120
Fax +358 9 2910 210
http://www.aerial.fi
aerial@aerial.fi

Anti climbing device for tower 2000/76, 2600/89

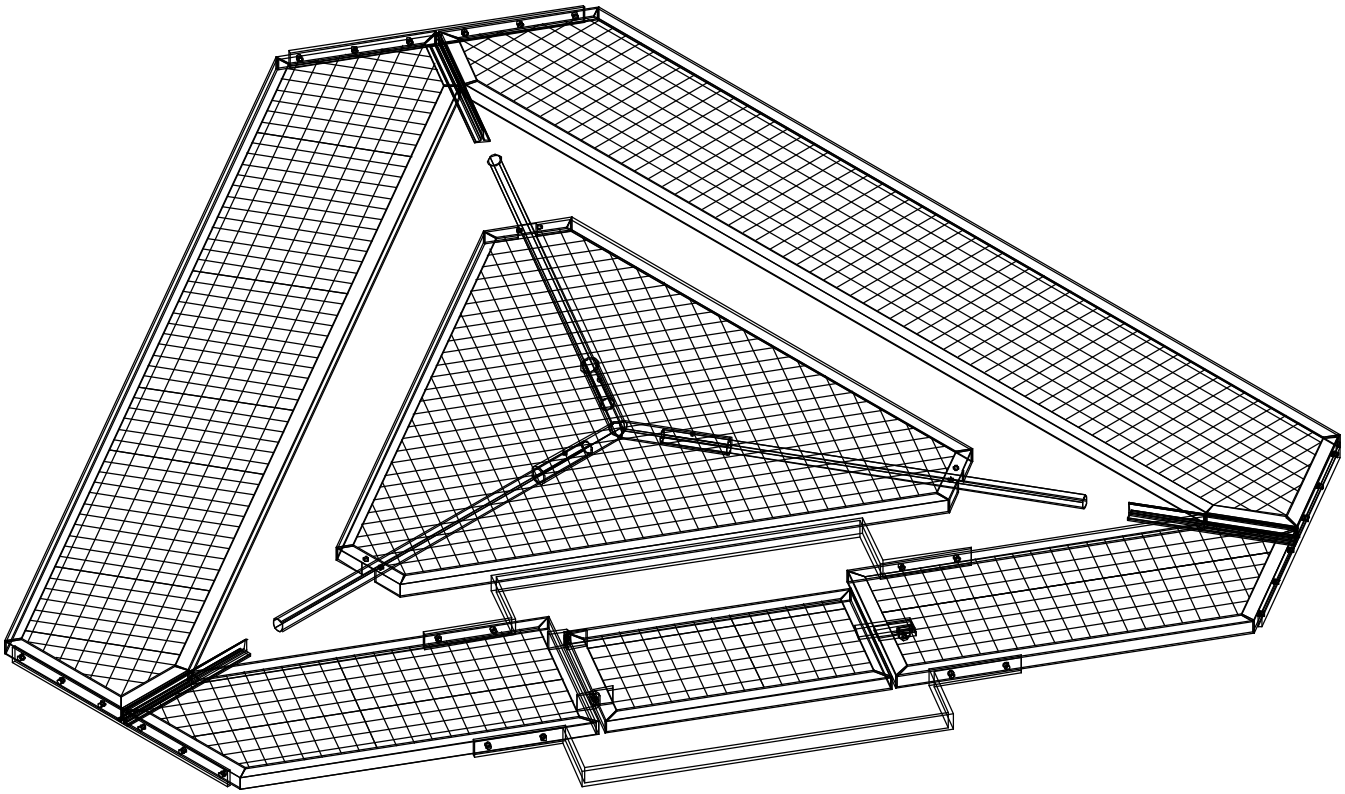

Aerial Oy

Box 22
04401 Järvenpää
Finland

Tel. +358 9 2790 120
Fax +358 9 2910 210

http://www.aerial.fi
aerial@aerial.fi

Anti climbing device for tower 3200...4400/89

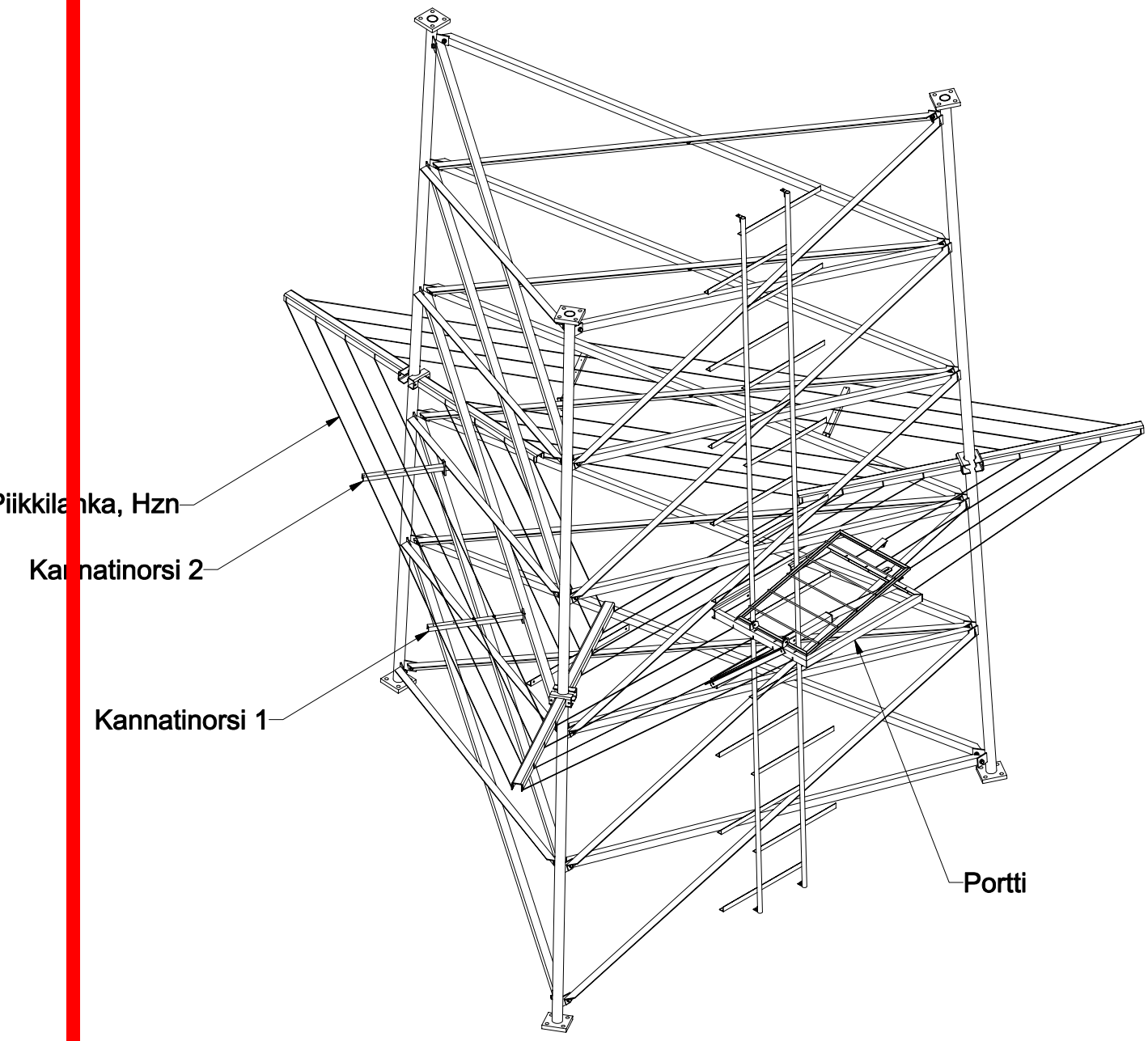

Aerial Oy
Box 22
04401 Järvenpää
Finland
Tel. +358 9 2790 120
Fax +358 9 2910 210
http://www.aerial.fi
aerial@aerial.fi

Mast installations

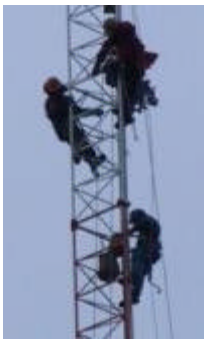

Aerial Oy has its own mast groups to take care of the on-site mast erection, antenna and cable installations and the final inspection and approval. These groups work all the year round and guarantee fast, safe and reliable mast installation. As they arrive they have got everything with them in their vehicles: mast elements, tools, truck-mounted hoister plus antennas, cables, earthing kits, connectors and so forth if agreed so. The only resource that is needed from outside with bigger towers is a crane or alternatively a helicopter if the site is beyond reach of crane vehicles.

Antenna installations and cabling

Antenna installation and cabling service is easiest to include to initial mast building operation but can also be ordered separately. Aerial mast crews perform fast and reliably and if required for example radiation pattern computer simulations can be done to verify desired specifications. Aerial's antenna production line plus expertise as a cable representative help you to choose an optimized solution.

Foundations, road and equipment shelter

Usually the bedplate is cast by Aerial according to drawings, instructions and materials agreed upon. Even an adequate road leading from nearest public roadway to the foundations are generally constructed by Aerial Oy.

Equipment shelter for the new mast is most often organized and constructed by the customer.

Final approval

As the construction has been completed the final approval will be made usually by the supervisor representing the customer.

Mast analysis

To help you to choose the most effective and economic mast solution, Aerial Oy provides you with computerized mast analysis service. It can optimize tower design and material strength to suit your loading requirements plus expected local environmental conditions such as wind speeds and icing. By request Aerial Oy delivers a written statement on the analysis results including explicit graphical representations of the effective forces and twisting and bending moments.

Analysis can also be done on existing masts as well as all other metal constructions to define for instance extra loading or retrofit effects on a structure. The analysis is available also for masts made by other manufacturers.

Aerial uses FEM analysis to solve more demanding and complex objects. The picture below describes stresses exerted on a tube mast base plate.

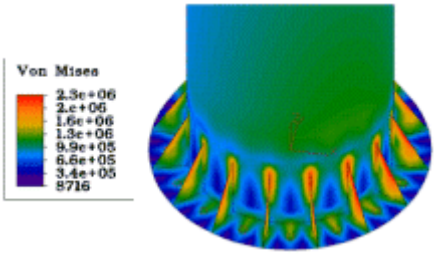

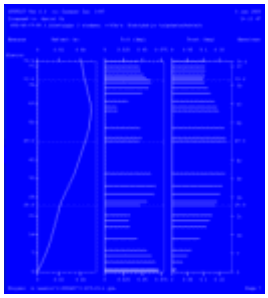

Maintenance

Aerial Oy undertakes maintenance and service for company masts as well as other manufacturers' products thoughout Finland. Mast maintenance is conducted according to Finnish "Masto-ohje 1980".

Mast service includes:

- Visual inspection
- Service checks and measurements
- Repairs of defects
- Antenna circuit measurements
- Grounding quality measurements
- Mast loading inspection and analysis as needed

Service intervals

Class	*Description*	*Service life*	*Visual inspection*	*Checks and Service years*
A	Primary mast	50 years	1/2 yearly	1,3,8,13,18...
B	Average mast	30 years	yearly	1,5,10,18,26...
C	Secondary mast	10 years	yearly	1,10,20,30...

Class A includes masts that in case of collapse cause essential damage to national or international telecommunication connections or cause hazard to personal security. It also includes masts that are excessively expensive or time-consuming to rebuild.

Class B includes masts that in case of collapse cause limited damage to national telecommunication connections. In these cases connections can be maintained using back-up systems or reserve masts and reconstruction does not require excessive funds or resources.

Class C includes masts that in case of collapse cause only local harm and higher category rating would lead to essential extra costs. These masts can be rebuilt fast and easily with low costs and their service life is short.

Maintenance program

Following maintenance program is conducted on a mast site. Additional checks will be undertaken if necessary.

Vertical straightness and initial guy wire tensions

Mast vertical straightness is measured with a theodolite from three directions with 120 degree angles between (normally alongside guy wires). There are certain requirements for straightness so that curvature or obliqueness does not cause additional stresses to the mast body.

Initial guy wire tension is measured by dynamometer, manometer equipped hydraulic lift or electric pull/press sensor.

Foundations and anchors

This part of the maintenance program comprises checks about the following topics:

- Movement of mast foundation and guy wire anchors
- Concrete fragmentation
- Anchor screw nut tightness
- Mast foundation drain pipe condition where applicable

Mast body

- Mast legs, diagonals
- Material defects
- Water ingestion in the pipes
- Screw connections
- Base insulator (where applicable)
- Welded connections (if in doubt, connections will be checked with magnetic inspection method or ultrasound device)

Safety equipment

Safety rail and ladder, handrail and fences, rest and antenna platforms are checked for serviceability.

Cable racks

Cable rack mountings are checked

Antenna mountings

Antenna mountings will be checked for correct tightness and that clamps do not cause additional stress to the mast elements.

Guy wires and connections

- No rope ruptures in guy wires
- Guy wire insulator conditions
- Guy wire clamps
- Lock nuts and lock pins
- Pull from guy wires is distributed evenly between clamps

Corrosion

- Mast body and guy wire zinc coating
- Foundation and anchor bolt condition
- Protective painting condition

Obstruction lights and painting

- Obstruction painting in adequate shape
- Obstruction lights serviceable

Grounding

Grounding wire must be serviceable and if installed on rock it must be protected and properly covered. By request Aerial performs grounding quality measurements. Service includes a measurement document which lists the method and equipment used and grounding resistance of the measured soil.

Electrical installations

Electrical isntallations are checked for defects in the leads.

Antenna circuit measurement

Antenna circuit measurements are performed by request. A calibrated

equipment measures return loss as a function of frequency (or distance). Every measurement is filed and documented.

Mast loading evaluation

Aerial Oy maintenance gives a loading statement of each serviced masts. The inspection can be made accroding to customer's requirements, for example if the mast is already fully utilized or if there is unused capacity left to use. If the mast is not produced by Aerial Oy the drawings and loading configuration are needed.

Mast reinforcement

If mast reinforcements are required, the mast can be equipped with retrofit torsion resistor and double-wedged clamp or guy wire adapter provided the anchor rod is sufficienly strong. Alternatively a new anchor can be made. Mast reinforcements are bidded case by case.

Tidiness of the environment

The mast site can be cleaned by request. If earthmoving is needed it must be agreed upon beforehand.

Documentation

Aerial produces the following documents for the customer:

- Annual inspection record
- Driving kilometer log
- Mast loading statement based on visual inspection

and by request

- Grounding quality measurement record
- Antenna circuit measurement record
- Mast analysis documents

Modfications

When selecting a mast it is advisable to try to evaluate future requirements for the construction. If there is a need for new antenna systems to the tower later or a willing client or even a competitor is interested to rent an antenna position it is nice to have some excess capacity in the construction or at least a possibility to modify the mast.

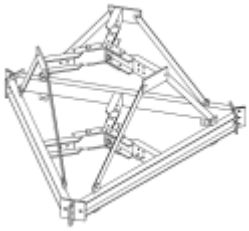

Disassembling the mast for modifications or reinforcements is certainly expensive and time-consuming operation. Possible unscheduled retrofits may lead to a situation where mast technical characteristics cannot be guaranteed. Aerial makes detachable torsion resistors (picture on the right) for guyed company masts. Extra torsion resistor can be installed to the mast for desired height. Double-wedged guy wire clamps make use of existing anchors possible.

Aerial Oy mast analysis service of course consults and supports the modification projects from start to finish.

Antenna circuit measurements

Antenna circuit measurements are performed by request. A calibrated equipment measures return loss as a function of frequency (or distance). Every measurement is filed and documented. Antenna circuit measurements are available with mast deliveries but also as a separate independent service. The pictures below are samples of measurement documents: return loss curve on top and cable graph below.

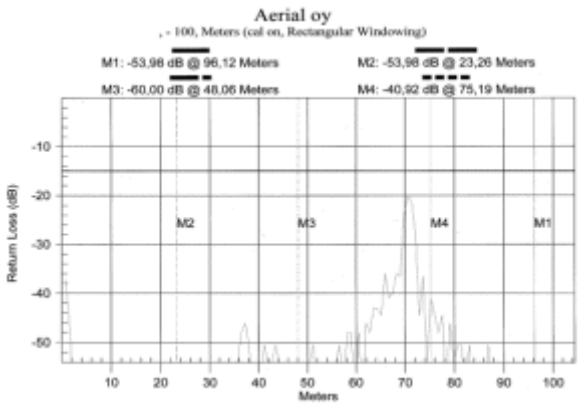

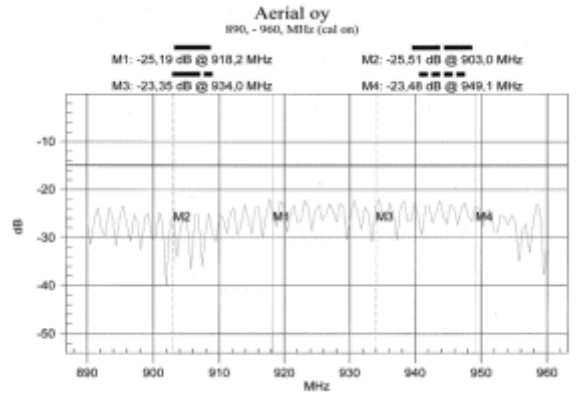

Landscaping

Whenever needed Aerial can help customers with their construction licence applications by providing so called landscaping service. This service means that a rendered 3-D CAD model is embedded to a digital image of the intended mast site by suitable software. As an appendix of the application, this document has proven itself quite useful in smoothening the licence process.

The following images show the basic idea of the possibilities of landscaping .

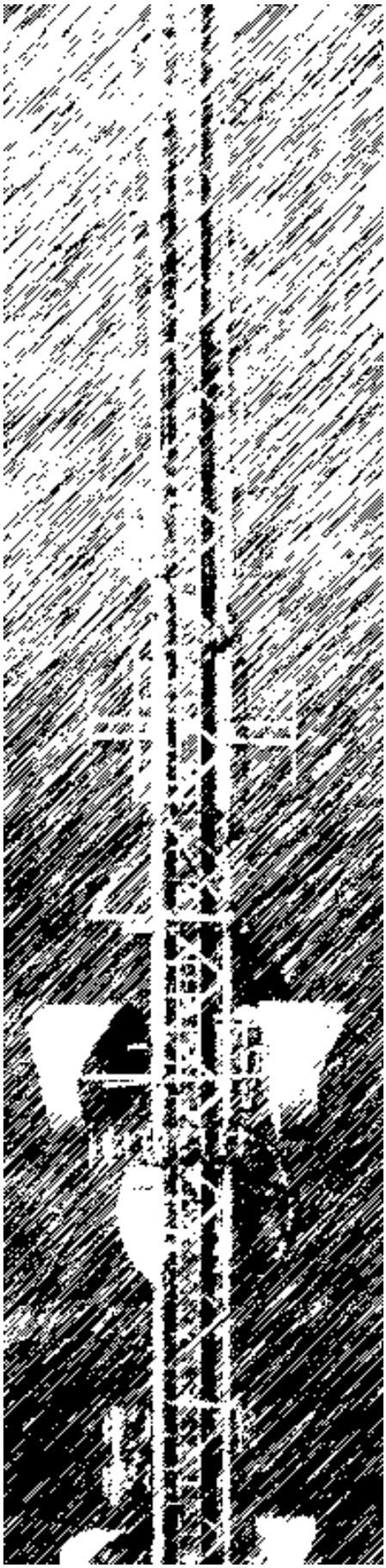

Antennas

Masts

Components

Design

Measurement

Testing

Installation

Aerial Oy

Box 22
04401 Järvenpää
Finland

Tel. +358 9 2790 120
Fax +358 9 2910 210

http://www.aerial.fi
aerial@aerial.fi

LOW-POWER POWER DIVIDERS

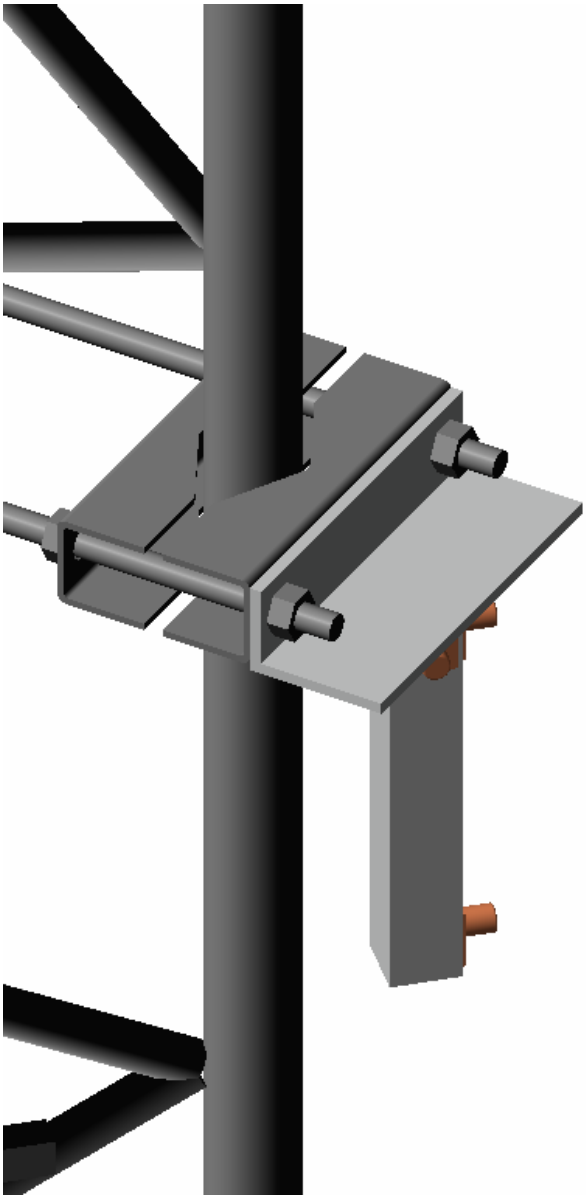

Aerial Oy has a wide range of high-power and low-power power dividers for different kinds of transmitting systems. Additional power dividers can be made according to customer specifications or existing models can be modified to suit your applications as well as possible.

The power dividers have all aluminium construction and only high quality connectors are used to achieve low VSWR- and IM-values. The inner and outer conductors are precision machined and welded to ensure exact fit, connection reliability and structural solidity.

The Aerial Oy power dividers are the perfect solution to well designed and realised feed network.

Type	Low-power power dividers
Impedance	50 Ω
SWR	1,1 typical, 1,15 max 1,2 typical on wide band types.
Insertion loss	0,10 dB max
Max. Continuous power	0,5 kW/dependent on the connectors
Materials	Aluminium PE-plastic Glassfiber
Mounting diameter	30...115 mm pipe
Options	Special types on request: Uneven coupling, multiband etc.

Aerial Oy

Box 22
04401 Järvenpää
Finland

Tel. +358 9 2790 120
Fax +358 9 2910 210

http://www.aerial.fi
aerial@aerial.fi

Type	Frequency [MHz]	Outputs	Connectors	Coupling Loss [dB]
TR2201	68...88	2	N female	3,01
TR3201	68...88	3	N female	4,77
TR4201	68...88	4	N female	6,02
TR2202	68...88	2	7/16 female	3,01
TR3202	68...88	3	7/16 female	4,77
TR4202	68...88	4	7/16 female	6,02
TR2301	88...108	2	N female	3,01
TR3301	88...108	3	N female	4,77
TR4301	88...108	4	N female	6,02
TR2302	88...108	2	7/16 female	3,01
TR3302	88...108	3	7/16 female	4,77
TR4302	88...108	4	7/16 female	6,02
TR8302	88...108	8	7/16 female	9,03
TR2351	118...144	2	N female	3,01
TR3351	118...144	3	N female	4,77
TR4351	118...144	4	N female	6,02
TR2352	118...144	2	7/16 female	3,01
TR3352	118...144	3	7/16 female	4,77
TR4352	118...144	4	7/16 female	6,02
TR2361	108...225	2	N female	3,01
TR3361	108...225	3	N female	4,77
TR4361	108...225	4	N female	6,02
TR2362	108...225	2	7/16 female	3,01
TR3362	108...225	3	7/16 female	4,77
TR4362	108...225	4	7/16 female	6,02
TR2401	146...174	2	N female	3,01
TR3401	146...174	3	N female	4,77
TR4401	146...174	4	N female	6,02
TR2402	146...174	2	7/16 female	3,01
TR3402	146...174	3	7/16 female	4,77
TR4402	146...174	4	7/16 female	6,02
TR2451	174...230	2	N female	3,01
TR2452	174...230	2	7/16 female	4,77
TR2481	225...400	2	N female	3,01
TR3481	225...400	3	N female	4,77
TR4481	225...400	4	N female	6,02
TR2482	225...400	2	7/16 female	3,01
TR3482	225...400	3	7/16 female	4,77
TR4482	225...400	4	7/16 female	6,02
TR2501	340...470	2	N female	3,01
TR3501	340...470	3	N female	4,77
TR4501	340...470	4	N female	6,02
TR2502	340...470	2	7/16 female	3,01
TR3502	340...470	3	7/16 female	4,77
TR4502	340...470	4	7/16 female	6,02
TRIN2502	380...430	2	7/16 female	3,01
TRIN2502-7	380...430	2	7/16 female	1,0/7,0 uneven
TRIN2502-12	380...430	2	7/16 female	0,3/12 uneven

Aerial Oy
Box 22
04401 Järvenpää
Finland
Tel. +358 9 2790 120
Fax +358 9 2910 210
http://www.aerial.fi
aerial@aerial.fi

TRIN2502-20	380...430	2	7/16 female	0,05/20 uneven
TRL2502	380...430	2	7/16 female	3,01
TRL2502-7	380...430	2	7/16 female	1,0/7,0 uneven
TRL2502-12	380...430	2	7/16 female	0,3/12 uneven
TR2531	400...635	2	N female	3,01
TR3531	400...635	3	N female	4,77
TR4531	400...635	4	N female	6,02
TR2532	400...635	2	7/16 female	3,01
TR3532	400...635	3	7/16 female	4,77
TR4532	400...635	4	7/16 female	6,02
TR2561	470...860	2	N female	3,01
TR3561	470...860	3	N female	4,77
TR4561	470...860	4	N female	6,02
TR2581	800...870	2	N female	3,01
TR3581	800...870	3	N female	4,77
TR4581	800...870	4	N female	6,02
TR2582	800...870	2	7/16 female	3,01
TR3582	800...870	3	7/16 female	4,77
TR4582	800...870	4	7/16 female	6,02
TR2601	870...960	2	N female	3,01
TR3601	870...960	3	N female	4,77
TR4601	870...960	4	N female	6,02
TR2602	870...960	2	7/16 female	3,01
TR3602	870...960	3	7/16 female	4,77
TR4602	870...960	4	7/16 female	6,02
TR2631	635...1000	2	N female	3,01
TR3631	635...1000	3	N female	4,77
TR4631	635...1000	4	N female	6,02
TR2632	635...1000	2	7/16 female	3,01
TR3632	635...1000	3	7/16 female	4,77
TR4632	635...1000	4	7/16 female	6,02
TR2701	1400...1530	2	N female	3,01
TR3701	1400...1530	3	N female	4,77
TR4701	1400...1530	4	N female	6,02
TR2702	1400...1530	2	7/16 female	3,01
TR3702	1400...1530	3	7/16 female	4,77
TR4702	1400...1530	4	7/16 female	6,02
TR2712	870...2170	2	7/16 female	3,01
TR3712	870...2170	3	7/16 female	4,77
TR4712	870...2170	4	7/16 female	6,02
TR2801	1710...2170	2	N female	3,01
TR3801	1710...2170	3	N female	4,77
TR4801	1710...2170	4	N female	6,02
TR2802	1710...2170	2	7/16 female	3,01
TR3802	1710...2170	3	7/16 female	4,77
TR4802	1710...2170	4	7/16 female	6,02
TRL2852	380...2200	2	7/16 female	3,01
TR3852	380...470	3	7/16 female	4,77

	870...960 1710...2170			
TR4952	380...470 870...960 1710...2170	4	7/16 female	6.02
TR2901	2400...2500	2	N female	3,01
TR3901	2400...2500	3	N female	4,77
TR4901	2400...2500	4	N female	6,02

Due to the large amount of different versions and frequency ranges the above represents only a part of the power dividers available. For more information please contact Aerial Oy or the representative of your area.

Aerial Oy
Box 22
04401 Järvenpää
Finland
Tel. +358 9 2790 120
Fax +358 9 2910 210
http://www.aerial.fi
aerial@aerial.fi

HIGH-POWER POWER DIVIDERS

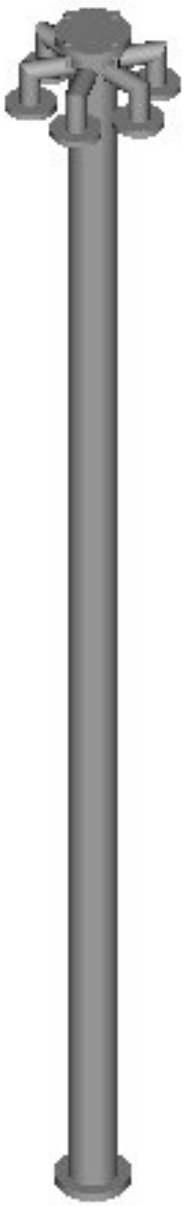

Aerial Oy has a wide range of high-power and low-power power dividers for different kinds of transmitting systems. Additional power dividers can be made according to customer specifications or existing models can be modified to suit your applications as well as possible.

The power dividers have all aluminium construction and only high quality connectors are used to achieve low VSWR- and IM-values. The inner and outer connectors are precision machined and welded to ensure exact fit, connection reliability and structural solidity.

The Aerial Oy power dividers are the perfect solution to well designed and realised feed network.

Type	Low-power power dividers
Impedance	50 Ω
SWR	Dependent on divider type
Insertion loss	0,10 dB typical
Max. Continuous power	Dependent on divider type
Materials	Aluminium Teflon
Mounting diameter	30…115 mm tube
Options	Special types on request: Uneven coupling, multiband etc.

Aerial Oy

Box 22
04401 Järvenpää
Finland

Tel. +358 9 2790 120
Fax +358 9 2910 210

http://www.aerial.fi
aerial@aerial.fi

Type	Frequency [MHz]	Input	Outputs	Coupling Loss [dB]	Power handling [Kw]	SWR	Notes
TR10	88-108	1 5/8"	8 x 7/16	9,03	20	1,06	90˚ phase shift
TR10-1	88-108	13/30	8 x 7/16	9,03	10	1,06	90˚ phase shift
TR10-2	88-108	3 1/8"	8 x 7/8"	9,03	*	1,06	90˚ phase shift
TR11-1	88-108	3 1/8"	2 x 21/48	3,01	30	1,06	
TR11-2	88-108	1 5/8"	2 x 7/16	3,01	6	1,06	
TR11-3	88-108	1 5/8"	2 x 21/48	3,01	20	1,06	
TR11-4	88-108	3 1/8"	2 x 1 5/8"	3,01	40	1,06	
TR11-5	88-108	1 5/8"	2 x 1 5/8"	3,01	20	1,06	
TR11-6	88-108	7/8"	2 x 7/16	3,01	6	1,06	
TR11-7	88-108	7/16	2 x 7/16	3,01	3	1,06	
TR11-8	88-108	7/8"	2 x 7/8"	3,01	6	1,06	
TR11-9	88-108	1 5/8"	2 x 7/8"	3,01	12	1,06	
TR12-1	174-225	3 1/8"	2 x 1 5/8"	3,01	25	1,06	
TR12-2	174-225	1 5/8"	2 x 13/30	3,01	15	1,06	
TR12-3	174-225	1 5/8"	2 x 7/16	3,01	4	1,06	
TR12-4	174-225	1 5/8"	2 x 1 5/8"	3,01	15	1,06	
TR12-5	174-225	7/8"	2 x 7/16	3,01	3	1,06	
TR12-6	174-225	7/16	2 x 7/16	3,01	2	1,06	
TR13-1	174-225	1 5/8"	4 x 7/16	6,02	15	1,06	
TR13-2	174-225	1 5/8"	4 x 1 5/8"	6,02	15	1,06	
TR13-3	174-225	1 5/8"	4 x 7/8"	6,02	12	1,06	
TR13-4	174-225	7/16	4 x 7/16	6,02	2	1,06	
TR13-5	174-225	3 1/8"	4 x 1 5/8"	6,02	40	1,06	
TR14-1	88-108	1 5/8"	3 x 1 5/8"	4,77	20	1,06	
TR14-2	88-108	3 1/8"	3 x 1 5/8"	4,77	40	1,06	
TR14-3	88-108	7/8"	3 x 7/16	4,77	5	1,06	
TR14-4	88-108	1 5/8"	3 x 7/8"	4,77	15	1,06	
TR14-5	88-108	1 5/8"	3 x 7/16	4,77	6	1,06	
TR14-6	88-108	7/8"	3 x 7/8"	4,77	5	1,06	
TR15-1	470-860	1 5/8"	2 x 7/16	3,01	2	1,1	
TR15-2	470-860	7/16	2 x 7/16	3,01	1	1,1	
TR15-3	470-860	1 5/8"	2 x 7/8"	3,01	6	1,1	
TR15-4	470-860	3 1/8"	2 x 1 5/8"	3,01	14	1,06	
TR15-5	470-860	4 1/2"	2 x 3 1/8"	3,01	*	*	
TR15-6	470-860	7/8"	2 x 7/8"	3,01	6	1,1	
TR16-1	470-860	3 1/8"	4 x 1 5/8"	6,02	15	1,06	
TR17-1	470-860	3 1/8"	2 x 3 1/8"	3,01	25	1,06	
TR18-1	174-225	3 1/8"	5 x 13/30	6,99	40	1,06	
TR19-1	88-108	1 5/8"	4 x 7/16	6,02	12	1,06	
TR19-2	88-108	7/8"	4 x 7/16	6,02	5	1,06	
TR19-3	88-108	7/16	4 x 7/16	6,02	3	1,06	
TR19-4	88-108	1 5/8"	4 x 7/8"	6,02	20	1,06	

Aerial Oy
Box 22
04401 Järvenpää
Finland
Tel. +358 9 2790 120
Fax +358 9 2910 210
http://www.aerial.fi
aerial@aerial.fi

TR19-5	88-108	3 1/8"	4 x 7/8"	6,02	20	1,06
TR19-6	88-108	3 1/8"	4 x 1 5/8"	6,02	40	1,06
TR19-7	88-108	6 1/8"	2 x 3 1/8"	3,01		
TR19-8	88-108	6 1/8"	3 x 3 1/8"	4,77		
TR19-9	88-108	6 1/8"	4 x 1 5/8"	6,02		
TR20-1	470-860	7/16	4 x 7/16	6,02	1	1,06
TR20-2	470-860	1 5/8"	4 x 7/16	6,02	8	1,06
TR20-3	470-860	3 1/8"	4 x 1 5/8"	6,02	15	1,06
TR20-4	470-860	1 5/8"	4 x 7/8"	6,02	8	1,06
TR20-5	470-860	6 1/8"	4 x 1 5/8"	6,02	40	1,06
TR20-6	470-860	1 5/8"	4 x 7/16	6,02	8	1,06
TR20-7	470-860	3 1/8"	4 x 7/8"	6,02	12	1,06
TR20-8	470-860	4 1/2"	4 x 3 1/8"	6,02	*	*
TR20-9	470-860	7/8"	4 x 7/16	6,02	*	*
TR21-1	470-740	6 1/8"	5 x 1 5/8"	6,99	*	*
TR22-1	174-225	7/16	3 x 7/16	4,77	2	1,06
TR22-2	174-225	1 5/8"	3 x 7/16	4,77	6	1,06
TR22-3	174-225	3 1/8"	3 x 1 5/8"	4,77	25	1,06
TR22-4	174-225	3 1/8"	3 x 7/8"	4,77	*	*
TR22-5	174-225	7/8"	3 x 7/16	4,77	*	*
TR22-6	174-240	7/16	3 x 7/16	4,77	*	*
TR23-1	470-860	1 5/8"	3 x 7/16	4,77	3	1,06
TR23-2	470-860	3 1/8"	3 x 1 5/8"	4,77	25	1,08
TR23-3	470-860	7/16	3 x 7/16	4,77	1	1,06
TR23-4	470-860	6 1/8"	3 x 1 5/8"	4,77	40	1,06
TR23-5	470-860	7/8"	3 x 7/16	4,77	4	1,06
TR23-6	470-860	1 5/8"	3 x 7/8"	4,77	4	1,06
TR24-1	88-108	1 5/8"	6 x 7/16	7,78	15	1,06
TR24-2	88-108	1 5/8"	6 x 7/8"	7,78	15	1,06
TR24-3	88-108	7/8"	6 x 7/16	7,78	6	1,06
TR25-1	470-860	7/16	6 x 7/16	7,78	1	1,1
TR25-2	470-860	3 1/8"	6 x 7/16	7,78	*	*
TR25-3	470-860	7/8"	6 x 7/16	7,78	*	*
TR26-1	88-108	1 5/8"	7 x 7/16	8,45	20	1,06
TR26-2	88-108	3 1/8"	7 x 7/8"	8,45	40	1,06
TR26-3	88-108	3 1/8"	7 x 1 5/8"	8,45	40	1,06
TR27-1	88-108	4 1/2"	5 x 1 5/8"	6,99	*	*
TR28-1	55-68	3 1/8"	2 x 7/8"	3,01	*	*
TR29-1	55-68	7/8"	4 x 7/8"	6,02	*	*
TR29-2	55-68	7/8"	4 x 7/16	6,02	*	*
TR30-1	470-860	6 1/8"	8 x 1 5/8"	9,03	40	1,06
TR30-2	470-860	1 5/8"	8 x 7/16	9,03	2	*
TR30-3	470-860	7/16	8 x 7/16	9,03	2	*

Aerial Oy
Box 22
04401 Järvenpää
Finland
Tel. +358 9 2790 120
Fax +358 9 2910 210
http://www.aerial.fi
aerial@aerial.fi

TR31-1	215-224	3 1/8"	7 x 7/16	9,03	*	*
TR32-1	215-224	3 1/8"	6 x 7/16	9,03	*	*
TR33-1	175-225	3 1/8"	6 x 7/16	7,78	*	*
TR34-1	560-610	3 1/8"	5 x 1 5/8"	6,99	*	*
TR34-2	470-860	1 5/8"	5 x 7/8"	6,99	*	*
TR34-3	470-860	3 1/8"	5 x 7/8"	6,99	*	*
TR34-4	470-860	7/16	5 x 7/16	6,99	*	*
TR35-1	470-860	6 1/8"	6 x 1 5/8"	7,78	*	*
TR36-1	470-860	1 5/8"	3 x 7/8"	4,77	*	*

Aerial Oy reserves all rights.

Aerial Oy
Box 22
04401 Järvenpää
Finland
Tel. +358 9 2790 120
Fax +358 9 2910 210
http://www.aerial.fi
aerial@aerial.fi

COAXIAL CAVITIES

DESCRIPTION

Aerial Oy supplies coaxial cavity resonators for filter applications. Different kinds of cavity circuit combinations can be constructed to reject interfering frequencies or to isolate receivers or transmitters when using a common antenna.

Power rating, transmission and VSWR values depend on the selected cavity combination, filtered frequencies, interconnection cable and connector types which are all agreed with the customer. Tuning is factory-made at Aerial Oy premises unless agreed otherwise.

FEATURES

- Available as single cavity or multicoupler
- Passive element → minimum maintenance, maximum power
- Temperature drift compensated by using Invar steel as a conductor piston (tuning rod) material.
- Constructed and tuned individually according to the customer's order
- Materials: Aluminium alloy and silver plated brass
- Colour: Light grey
- High power version CR200-95 available for FM
- Installation between antenna and receiver(s) or transmitter(s).

MECHANICAL AND ELECTRICAL DATA

Type	CR110-75	CR110-95	CR200-95	CR110-120	CR110-150	CR110-450
Tuning range	68-88 MHz	88-108 MHz	88-108 MHz	118-144 MHz	146-174 MHz	380-470 MHz
RF-connector	N female	N female	7/16 female	N female	N female	N female
Diameter	∅ 110 mm	∅ 110 mm	∅ 200 mm	∅ 110 mm	∅ 110 mm	∅ 110 mm

Aerial Oy

Box 22
04401 Järvenpää
Finland

Tel. +358 9 2790 120
Fax +358 9 2910 210

http://www.aerial.fi
aerial@aerial.fi

BANDPASS FILTERS

Shape and steepness of the transmission curve can be adjusted by selecting the most suitable out of four possible positions of the coupling loops which are situated in the front panel of the cavity (see the picture below). However using radical coupling affects also the bandpass attenuation so this feature has to be used deliberately.

Adjustable loops are available for cavities with N-connectors only.

Illustrating example curves of one, two and three cavity circuits with different loop settings are below.

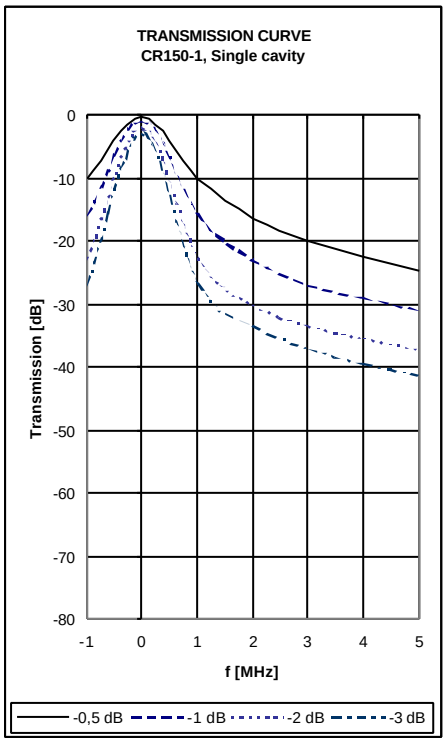

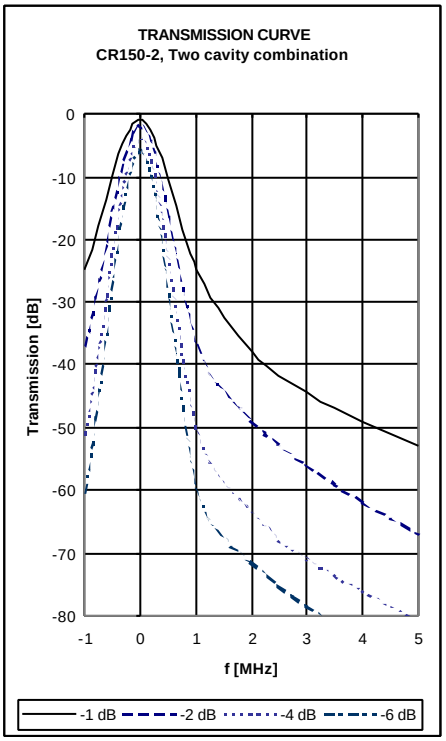

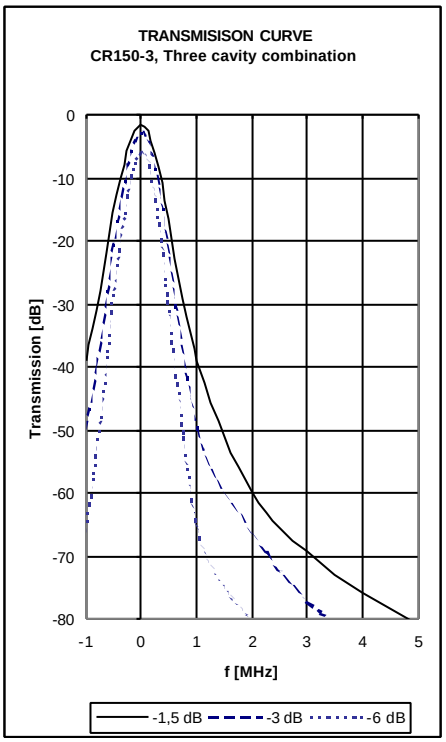

Aerial Oy

Box 22
04401 Järvenpää
Finland

Tel. +358 9 2790 120
Fax +358 9 2910 210

http://www.aerial.fi
aerial@aerial.fi

NOTCH FILTERS

To reject interfering spot frequencies coaxial cavity circuits can be tuned as notch filters. Some examples of possible 146…174 MHz range patterns are below:

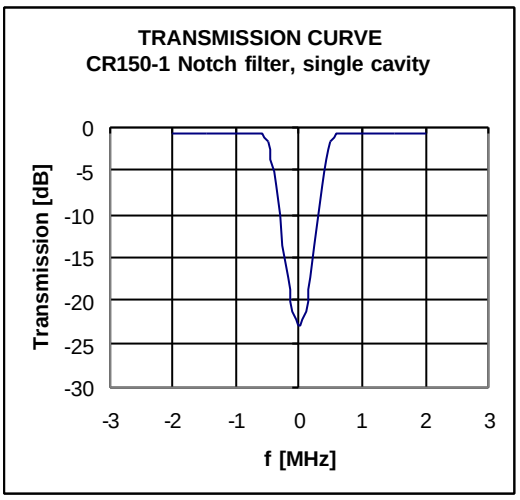

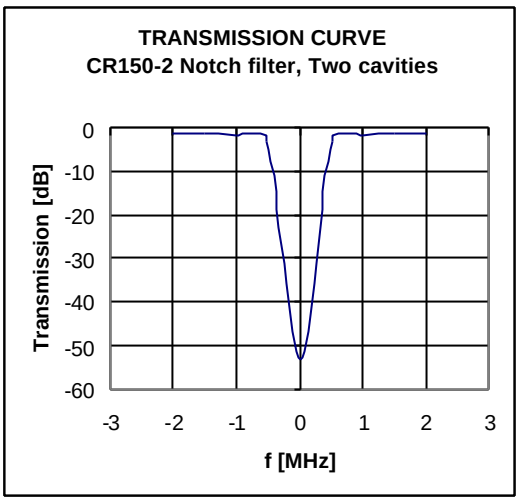

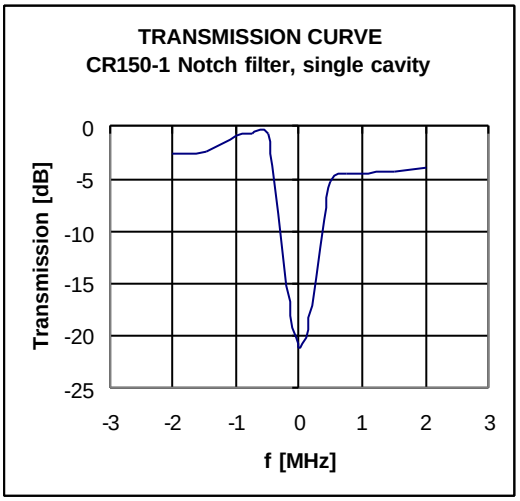

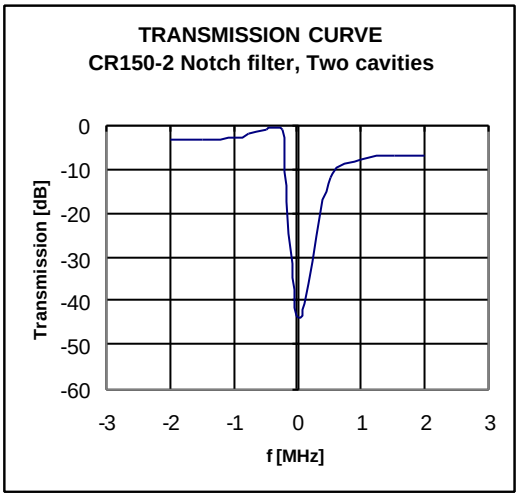

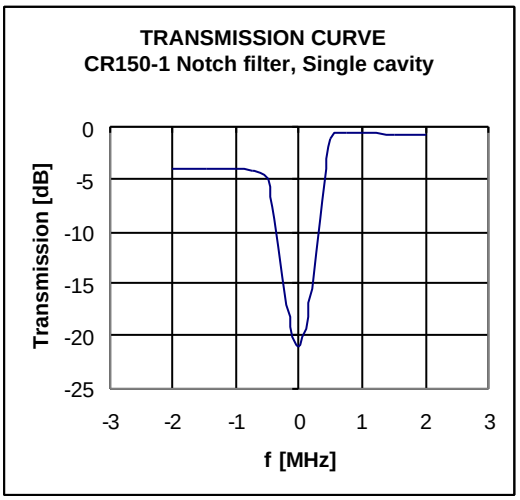

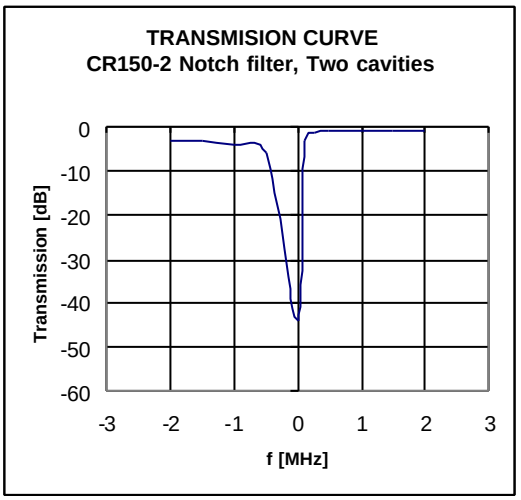

Aerial Oy
Box 22
04401 Järvenpää
Finland
Tel. +358 9 2790 120
Fax +358 9 2910 210
http://www.aerial.fi
aerial@aerial.fi

DUPLEXERS (MULTICOUPLERS)

Duplexer circuits can be used to couple multiple receivers or transmitters to a common antenna. This following measured example graph is a FM duplexer which couples two local radio transmitter feed signals together for common feed cable and antenna system. The block diagram of the system is on the right.

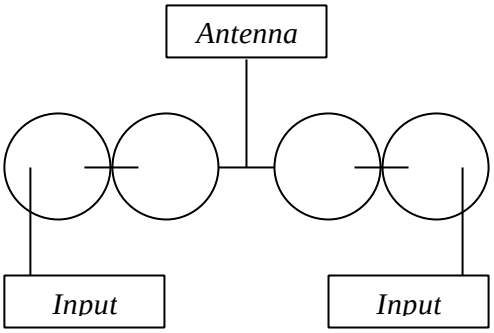

f1 = 105,2 MHz
f2 = 107,7 MHz
Bandpass attenuation 0,6 dB
Isolation 45 dB

System return loss can be matched better than 20 dB for a ±100 kHz frequency band.

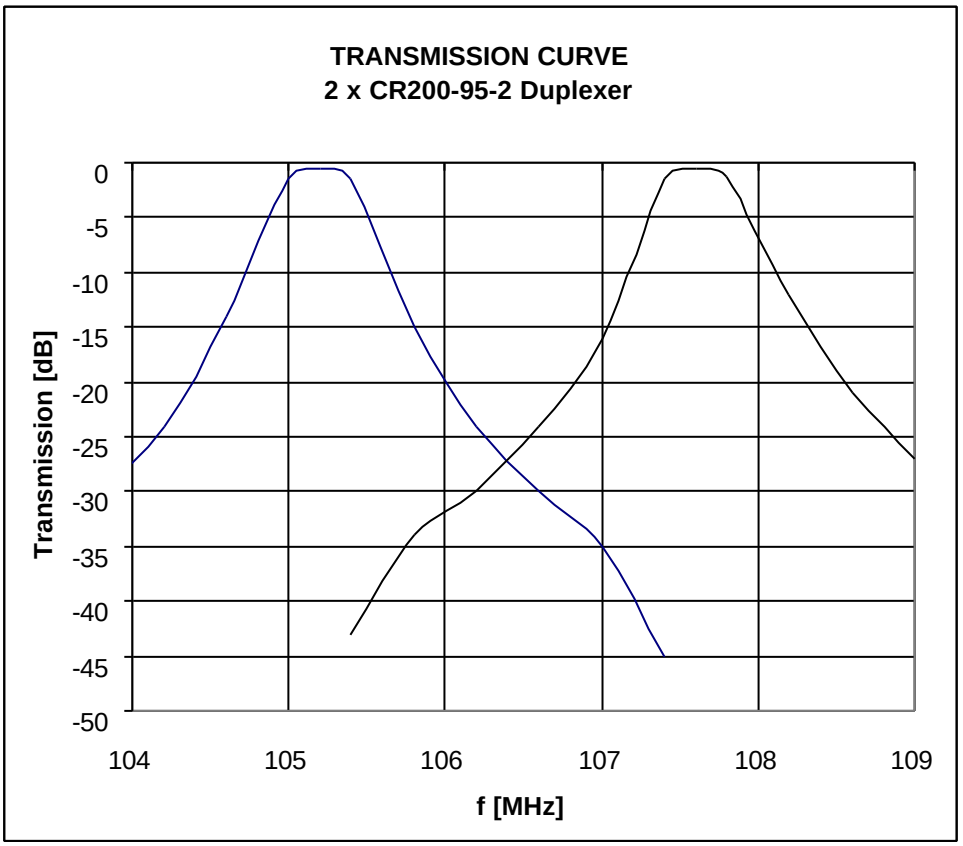

ORDERING INFORMATION

To order a correct filter type please contact our sales personnel and be prepared to inform us about the frequencies, bandwidths, Return loss values, power handling, bandpass and band reject attenuation or isolation which are required in your system. You can also leave the decision to our skilled engineers.

Aerial Oy
Box 22
04401 Järvenpää
Finland
Tel. +358 9 2790 120
Fax +358 9 2910 210
http://www.aerial.fi
aerial@aerial.fi

AH HYBRID-SERIES

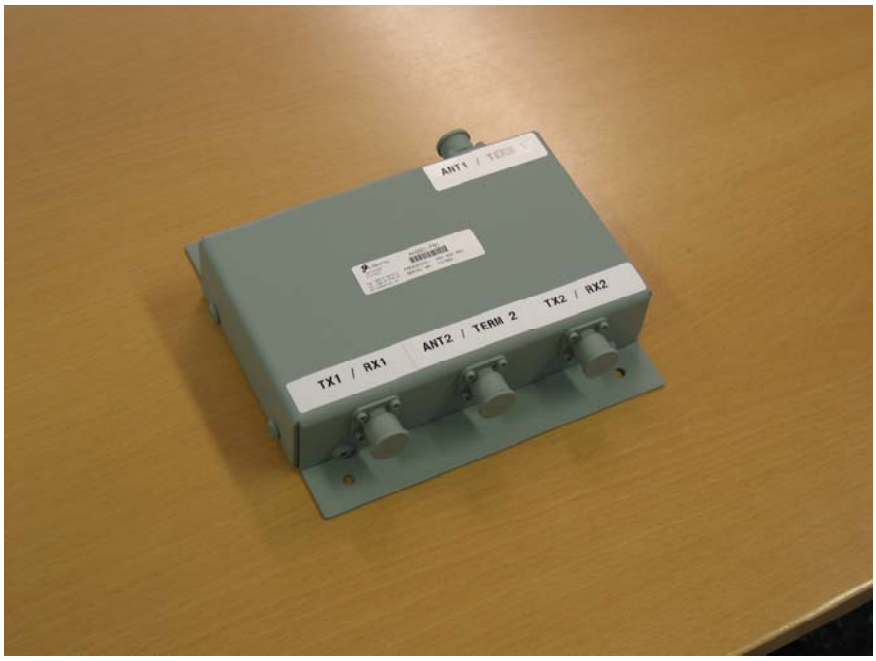

Type	AH HYBRID-SERIES
Frequency	68...88 MHz 88...108 MHz 118...136 MHz 118...144 MHz 146...174 MHz 380...400 MHz 410...430 MHz 450..470 MHz 890...960 MHz
Bandwidth	Depending on frequency range
Impedance	50 Ω
VSWR	1,3 max
Isolation	25...40 dB depending on frequency range
Coupling loss	3 dB
Insertion loss	0,15 dB
Max. Continuous power	0,5 kW
Input RF-connector	N or 7/16 female
Output RF-connector	N or 7/16 female
Wind area	0,075 m²
Dimensions (H x W x D)	300 x 250 x 45 mm
Weight	1,4 kg
Mounting diameter	Direct wall mount.
Materials	Aluminium
Options	Special types available on request. Rack mount.

* Isolation port requires a termination, if not in use.

Aerial Oy
Box 22
04401 Järvenpää
Finland
Tel. +358 9 2790 120
Fax +358 9 2910 210
http://www.aerial.fi
aerial@aerial.fi

ASYMMETRIC POWER DIVIDER / HYBRID AH2100-09-F71

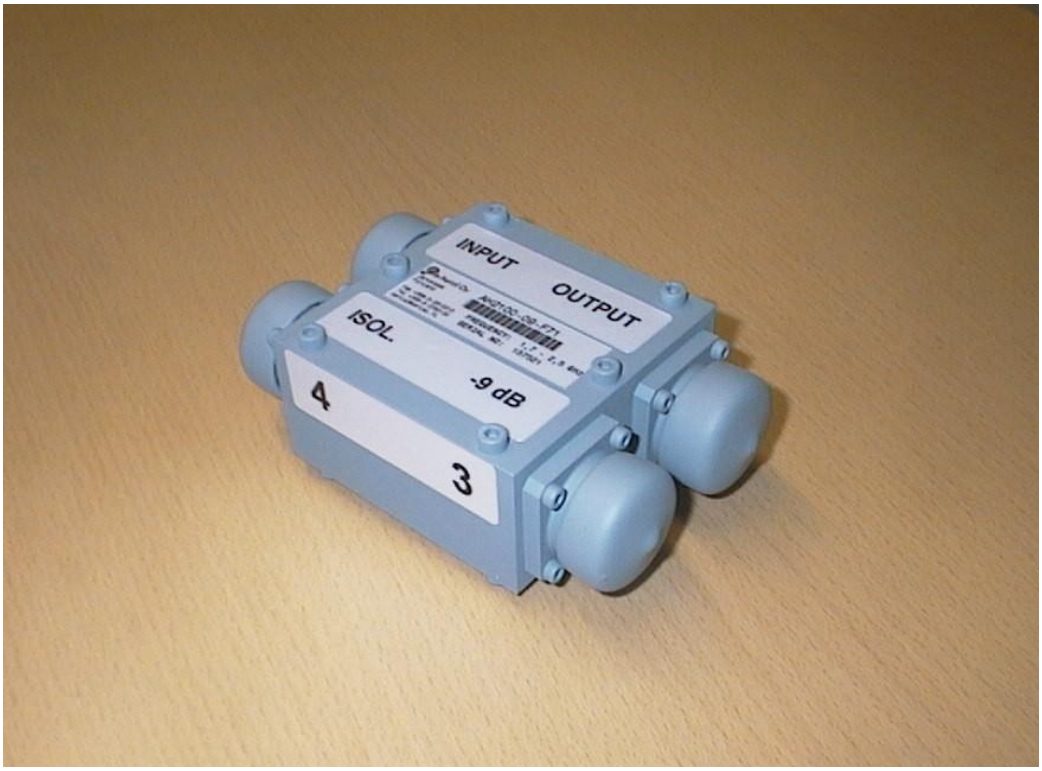

Type	AH2100-09-F71
Frequency	1,7...2,5 GHz
Bandwidth	0,8 GHz
Impedance	50 Ω
VSWR	1,5 max
Isolation	≥ 15 dB
Coupling loss	4,5 dB
Insertion loss	#1 Output 1 dB #2 Output 9 dB
Max. Continuous power	50 W
RF-connector	7/16 female
Dimensions (H x W x D)	80 x 100 x 40 mm
Weight	0,5 kg
Mounting	-
Materials	Aluminium, brass
Options	Connectors max power High performance on narrow band

* Isolation port requires a termination

Aerial Oy
Box 22
04401 Järvenpää
Finland
Tel. +358 9 2790 120
Fax +358 9 2910 210
http://www.aerial.fi
aerial@aerial.fi

AMUX925-4/1-FN1

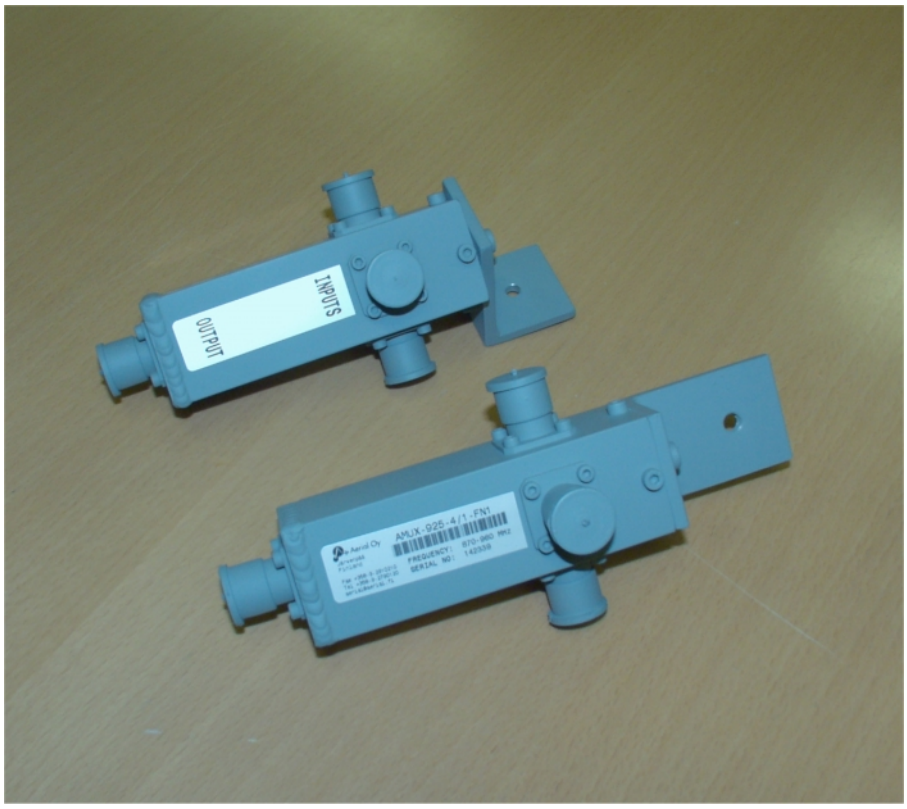

Type	AMUX925-4/1-FN1
Frequency	870…960 MHz
Impedance	50Ω
Return loss: Inputs Output	 ≥9dB (SWR≤2.0) ≥21dB (SWR≤1.2)
Transmission attenuation	6.0±0.5dB
Isolation between inputs	>17db
Max. countinuous power	2W
RF connector	N female
Dimensions	200x70x70mm
Weight	0.45kg
Materials	Aluminium
Options/addditional information	-for combining 2 to 4 GSM modules to one antenna -all not used inputs must be terminated with 50Ω 1W load.

Aerial Oy
Box 22
04401 Järvenpää
Finland
Tel. +358 9 2790 120
Fax +358 9 2910 210
http://www.aerial.fi
aerial@aerial.fi

HYBRID 100/400

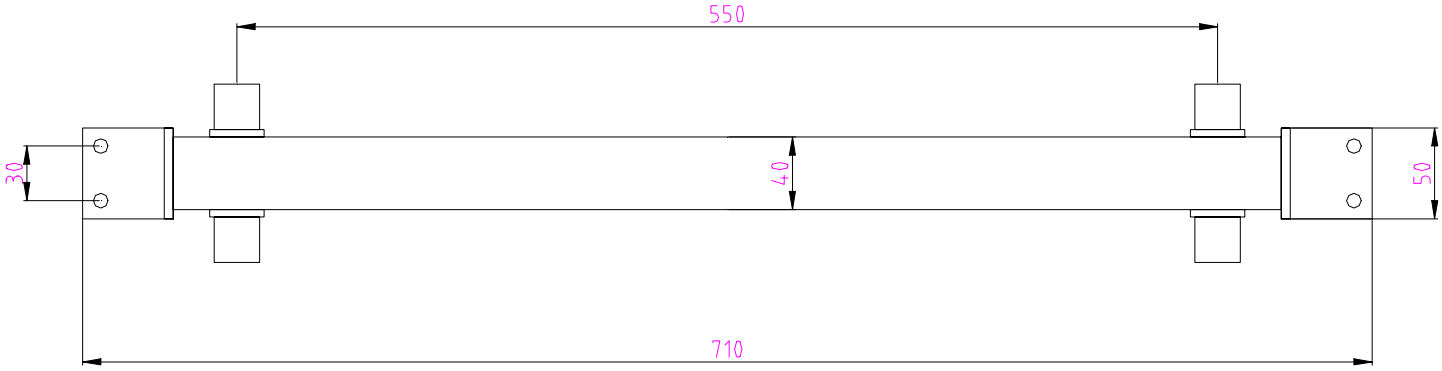

Type	H100/400
Input frequencies	80…160 MHz 400...450 MHz
Bandwidth	80 / 50 MHz
Impedance	50 Ω
VSWR	1,3 max
Isolation	≥ 17 dB between frequencies
Coupling loss	4,5 dB
Insertion loss	0,2 dB
Max. Continuous power	100 W
RF-connector	7/16 female
Dimensions (H x W x D)	710 x 50 x 100 mm
Weight	1,9 kg
Mounting	Wall mount
Materials	Aluminium
Options	-

* Isolation port requires a termination

Aerial Oy
Box 22
04401 Järvenpää
Finland
Tel. +358 9 2790 120
Fax +358 9 2910 210
http://www.aerial.fi
aerial@aerial.fi

DUPLEXFILTER ADUP160/390-FN1

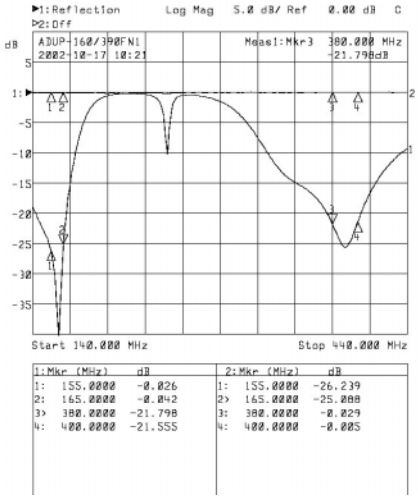

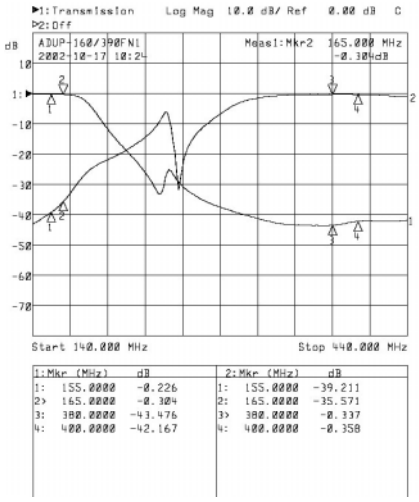

Type	ADUP160/390-FN1
Frequency	Port1: 155MHz…165MHz Port2: 380MHz...400MHz
Bandwidth	Port1: 10 MHz Port2: 20MHz
Impedance	50 Ω
VSWR	1,5 max
Isolation	25 dB min 30 dB typical
Coupling loss	0,4 dB
Insertion loss	0,1 dB
Max. Continuous power	30 W
Input RF-connector	Port 1: N-female Port 2: N-female
Output RF-connector	N-female
Dimensions (H x W x D)	60 x 125 x 80 mm
Weight	0,3 kg
Mounting	4 pcs M6 screws
Materials	Aluminium and copper
Options	-

Aerial Oy
Box 22
04401 Järvenpää
Finland
Tel. +358 9 2790 120
Fax +358 9 2910 210
http://www.aerial.fi
aerial@aerial.fi

λ/4-LIGHTNING PROTECTOR AELP2450-FN1

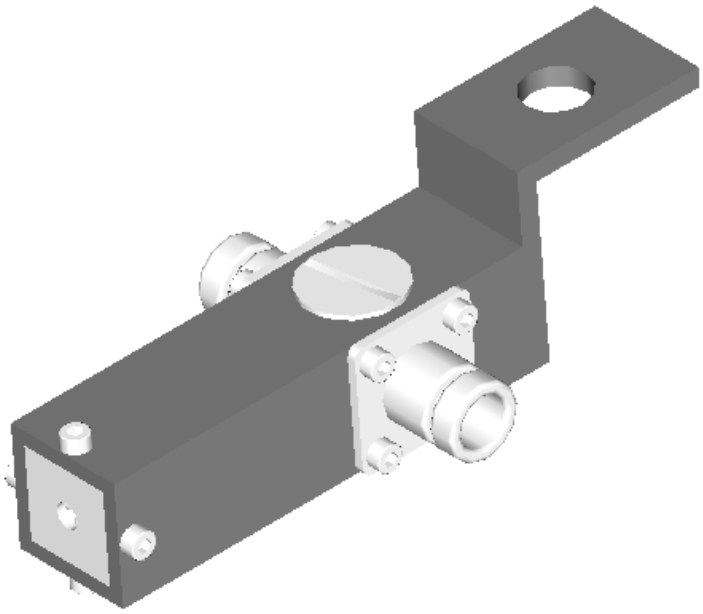

Type	AELP2450-FN1
Frequency	2,4 GHz...2,5 GHz
Bandwidth	0,1 GHz
Impedance	50 Ω DC grounded
VSWR	1,15 max
Feedthrough loss	0,15 dB
Max. Continuous power	0,25 kW
RF-connector	N female
Wind area	0,00125 m²
Dimensions (H x W x D)	130 x 25 x 25 mm
Weight	0,2 kg
Mounting diameter	∅13 mm hole
Materials	Aluminium
Options	-

Aerial Oy
Box 22
04401 Järvenpää
Finland
Tel. +358 9 2790 120
Fax +358 9 2910 210
http://www.aerial.fi
aerial@aerial.fi

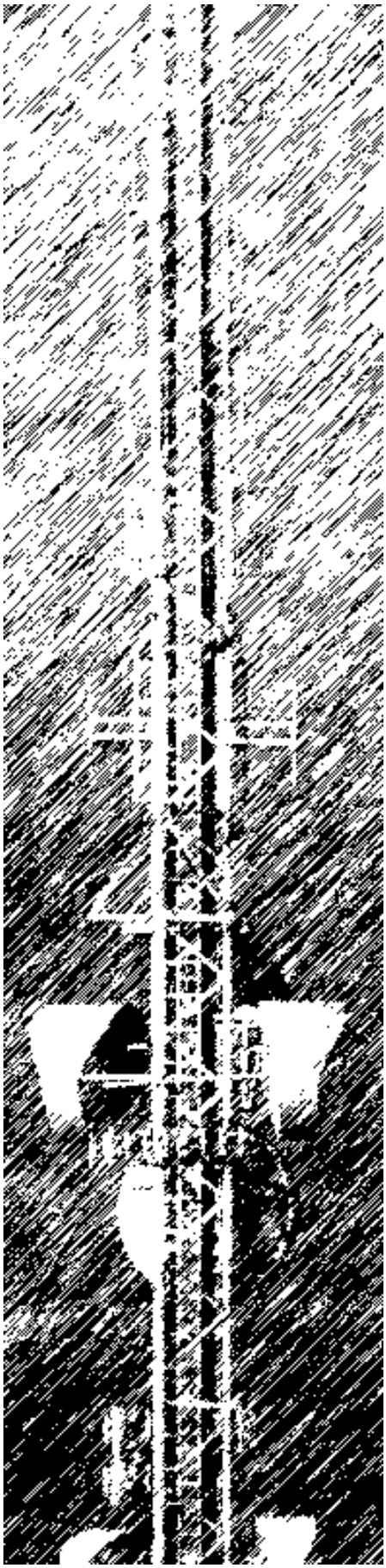

Antennas

Masts

Components

Design

Measurement

Testing

Installation

Aerial Oy

Box 22
04401 Järvenpää
Finland

Tel. +358 9 2790 120
Fax +358 9 2910 210

http://www.aerial.fi
aerial@aerial.fi

Loudspeaker installation tube HPM 89-6

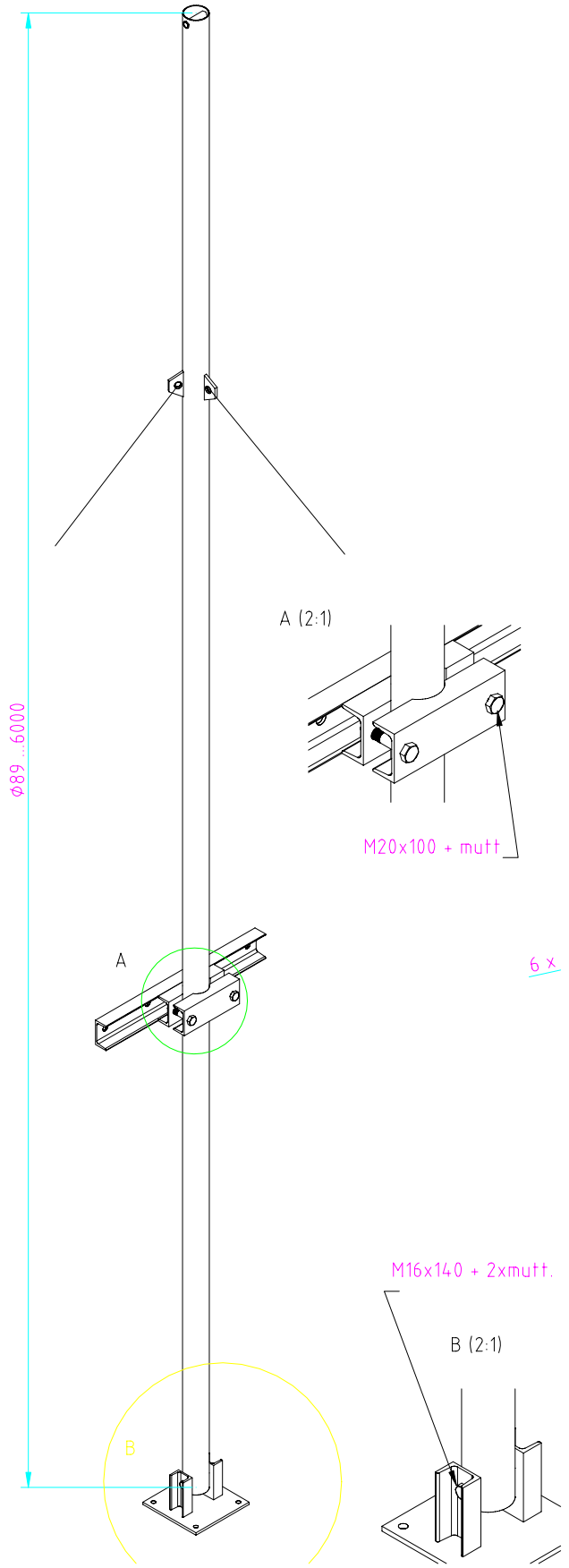

Aerial Oy
Box 22
04401 Järvenpää
Finland
Tel. +358 9 2790 120
Fax +358 9 2910 210
http://www.aerial.fi
aerial@aerial.fi

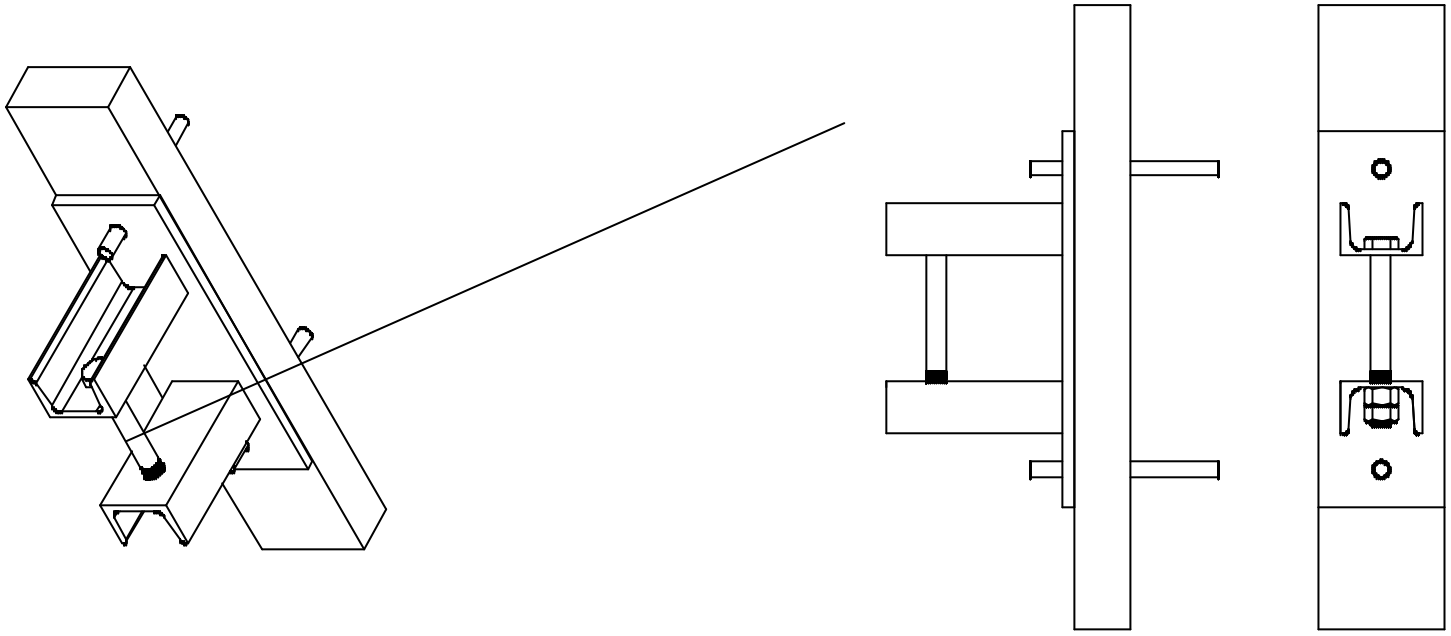

Design			Scale	Associated with	Description 1 Haruskiinnike röystöösaen
Drawn		ernp	1:4	Tolerance class middle	Description 2
Check					Description 3
Approv.					
Plot Date				Aerial Oy Tel.+358-9-2709 122 Fax.+358-9-2810 219 Box 53 04421 Järvenpää Finland http://www.aerial.fi aerial@aerial.fi	Material 1
Mass					Outline size
DWG					

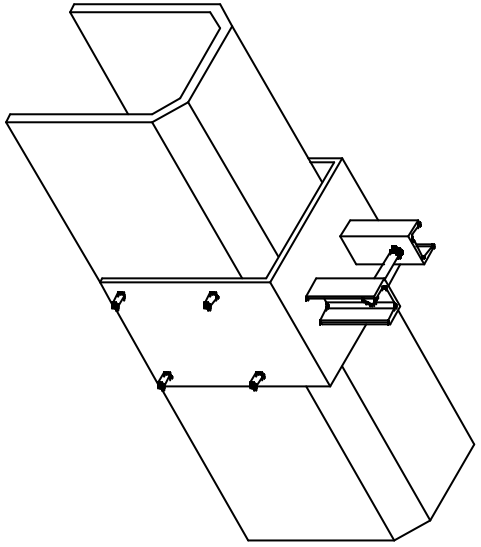

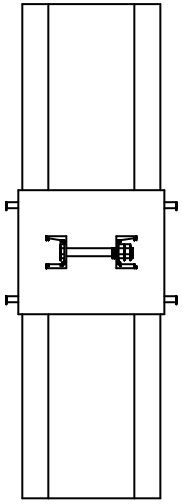

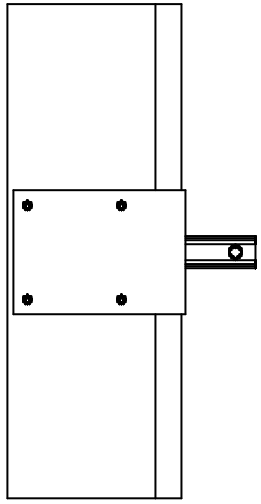

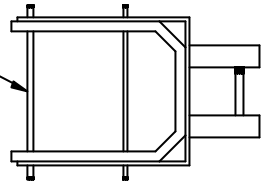

M12 vaarnat palkista läpi (4 kpl)

Design			Scale	Associated with	Description 1 AM90-6-1
Drawn		arna	1:20	Tolerance class middle	Description 2 Hpryskinrike palkille
Check					Description 3
Approv.					
Plot Date				Aerial Oy Tel.+358-9-2710 120 Fax.+358-9-2710 210 Box 69 04401 Järvenpää Finland http://www.aerial.fi aerial@aerial.fi	Material 1
Mass					Outline size
DWG					

TUBE MOUNTING SET AETMXXX-60-115-1

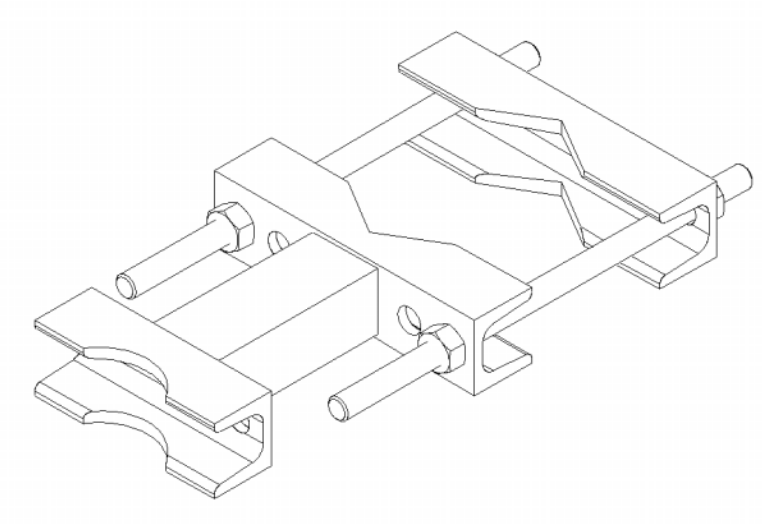

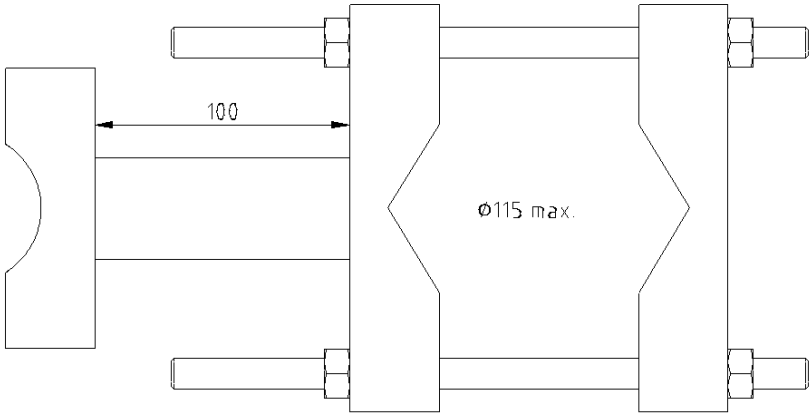

Parts list	pcs
U40-160 clamp	1
U40-XXX-110-160-1 clamp	1
M12x250 headless screw	2
M12 nut	4

Type	AETMXXX-60-115-1
Dimensions (H x W x D) (∅ x H)	See above drawing XXX=bracket length (100 in picture)
Weight	2.8 kg (100mm bracket)
Mounting diameter	max ∅150 mm pipe ∅60 mm mounting pipe
Materials	Hot dip galvanized steel
Versions	-Bracket length (100,300,500mm in stock)
Options	-

Aerial Oy
Box 22
04401 Järvenpää
Finland
Tel. +358 9 2790 120
Fax +358 9 2910 210
http://www.aerial.fi
aerial@aerial.fi

TUBE MOUNTING SET AETMXXX-60-115-2

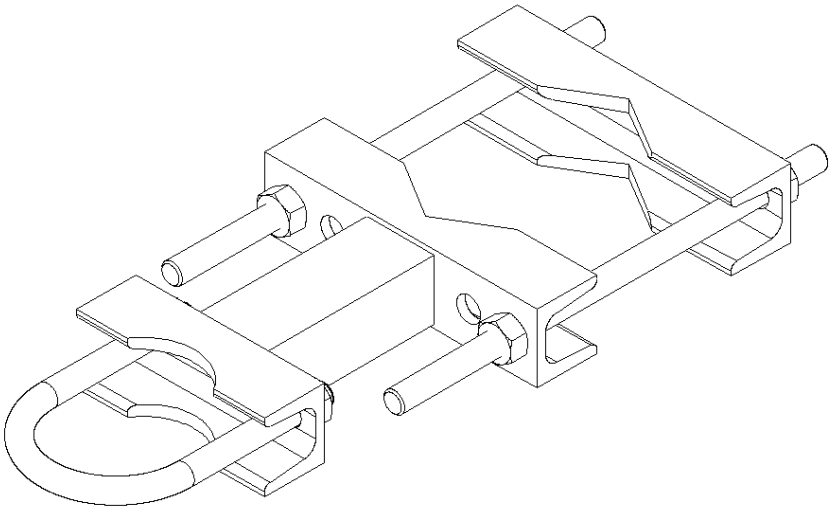

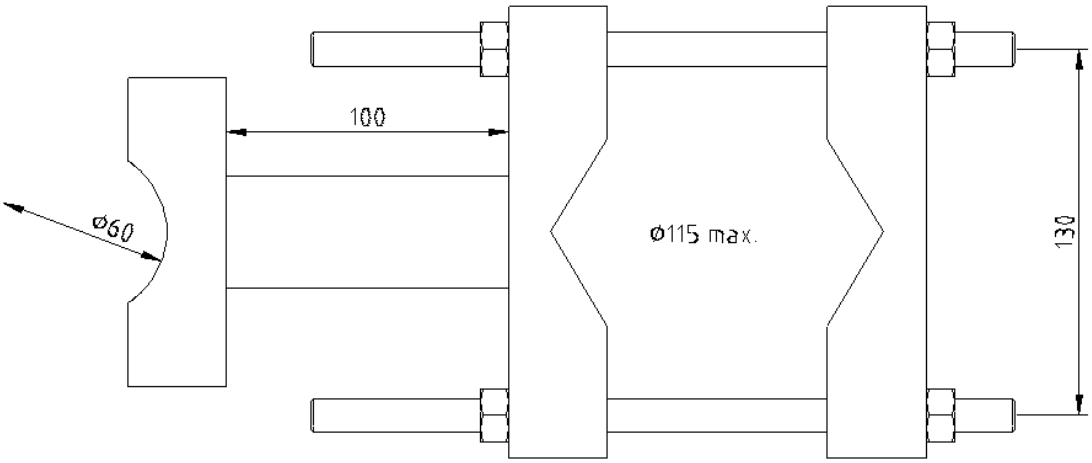

Parts list	pcs
U40-160 clamp	1
U40-XXX-110-160-1 clamp	1
U12-80 U-screw	1
M12x250 headless screw	2
M12 nut	6

Type	AETMXXX-60-115-2
Dimensions (H x W x D) (∅ x H)	See above drawing XXX=bracket length (100 in picture)
Weight	3.1 kg (100mm bracket)
Mounting diameter	max ∅150 mm pipe ∅60 mm mounting pipe
Materials	Hot dip galvanized steel
Versions	-Bracket length (100,300,500mm in stock)
Options	-

Aerial Oy
Box 22
04401 Järvenpää
Finland
Tel. +358 9 2790 120
Fax +358 9 2910 210
http://www.aerial.fi
aerial@aerial.fi

TUBE MOUNTING SET AETMXXX-60-115-3

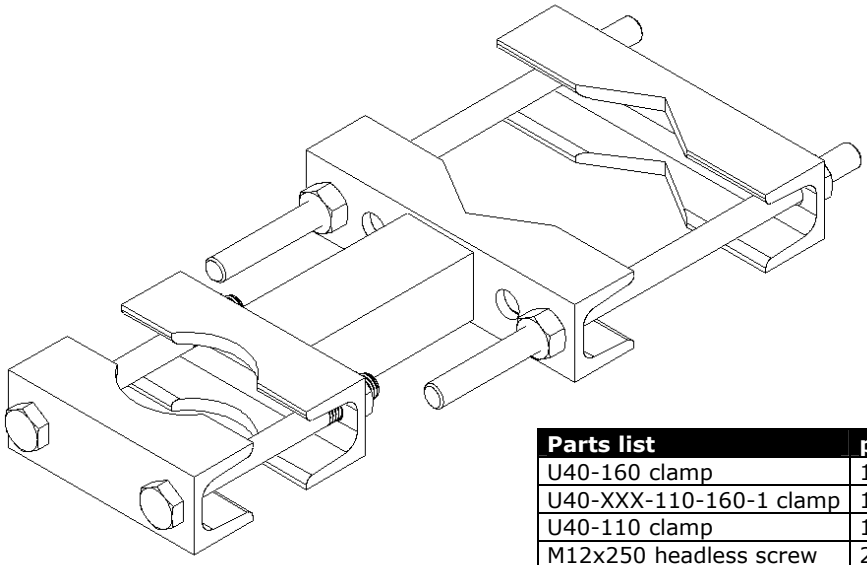

Parts list	pcs
U40-160 clamp	1
U40-XXX-110-160-1 clamp	1
U40-110 clamp	1
M12x250 headless screw	2
M12x120 screw	2
M12 nut	6

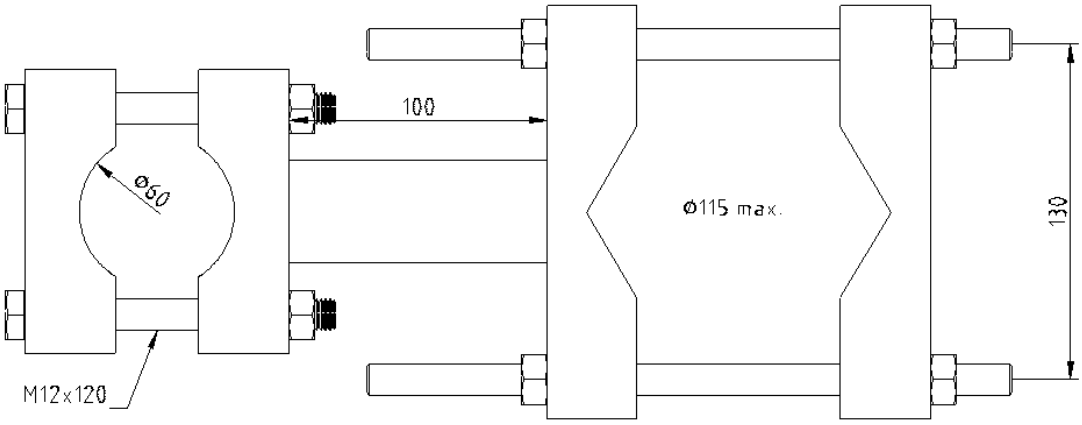

Type	AETMXXX-60-115-3
Dimensions (H x W x D) (∅ x H)	See above drawing XXX=bracket length (100 in picture)
Weight	3.1 kg (100mm bracket)
Mounting diameter	max ∅150 mm pipe ∅60 mm mounting pipe
Materials	Hot dip galvanized steel
Versions	-Bracket length (100,300,500mm in stock)
Options	-

Aerial Oy
Box 22
04401 Järvenpää
Finland
Tel. +358 9 2790 120
Fax +358 9 2910 210
http://www.aerial.fi
aerial@aerial.fi

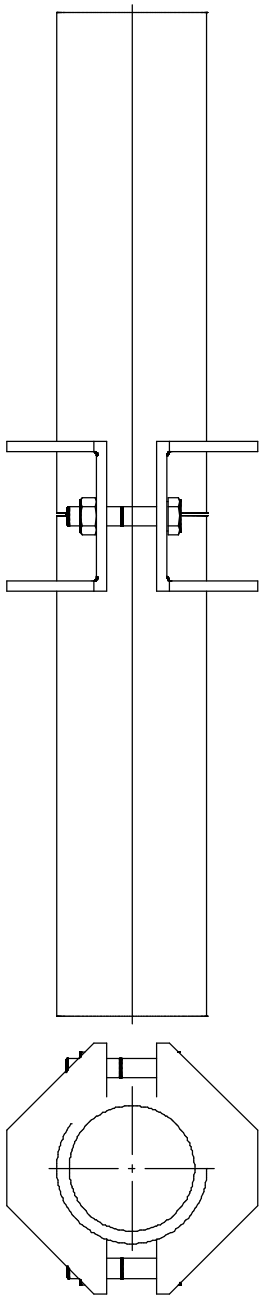

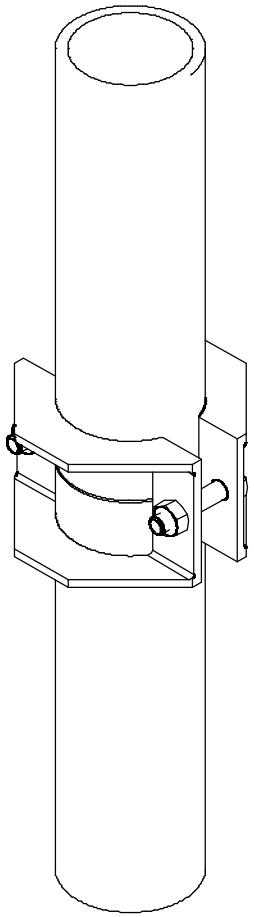

Design			Scale	Associated with	Description 1 Jatko 60–60
Drawn		arno	1:2	Tolerance class middle	Description 2
Check					Description 3
Approv.					
Plot Date				Aerial Oy Tel.+358-9-2780 120 Fax.+358-9-2810 210 Box 22 04401 Järvenpää Finland http://www.aerial.fi aerial@aerial.fi	Material 1
Mass					Outline size
DWG					

TUBE MOUNTING SET AETM50-200-110-1

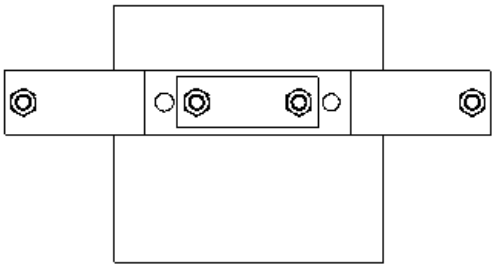

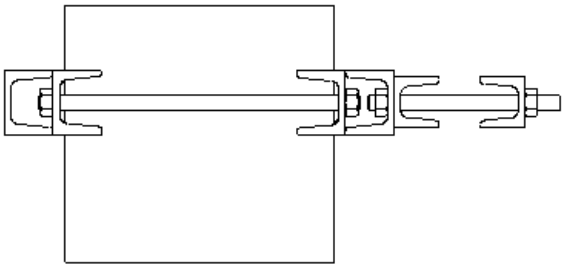

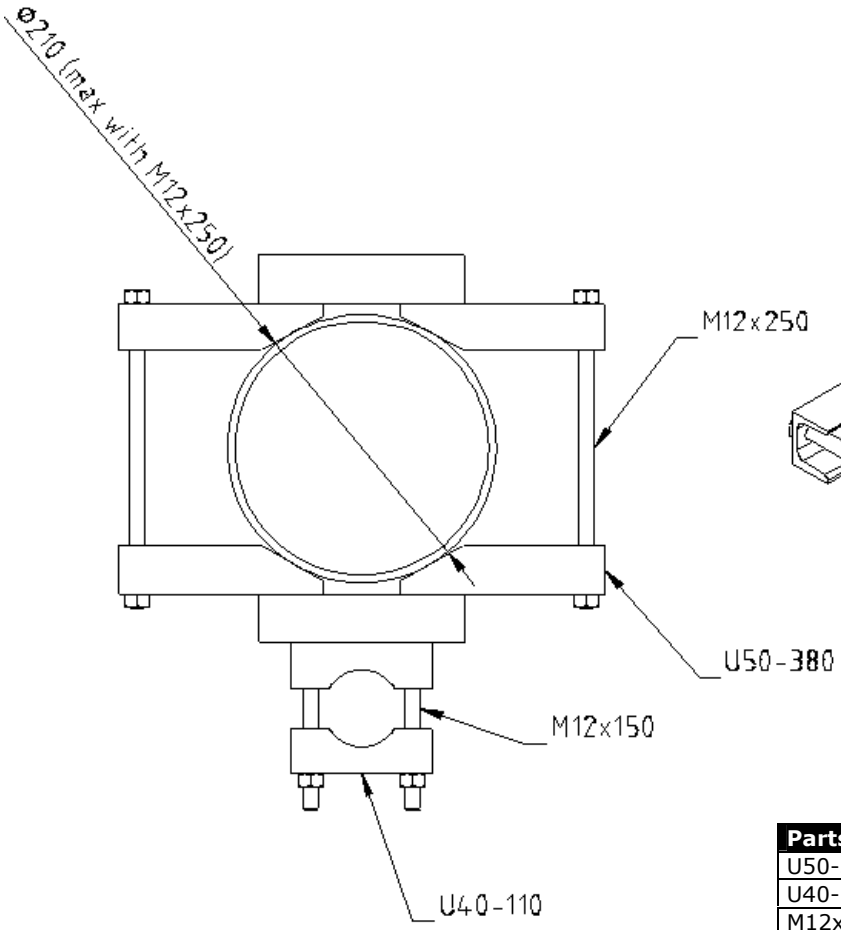

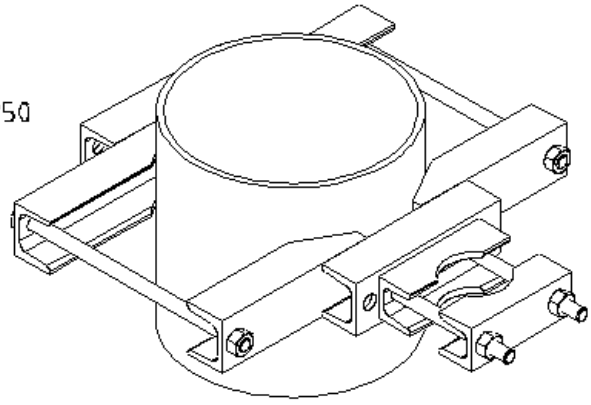

Parts list	pcs
U50-380 clamp	2
U40-110 clamp	2
M12x250 headless screw	2
M12x150 headless screw	2
M12 nut	8

Type	AETM50-200-110-1
Dimensions (H x W x D) (∅ x H)	See above drawing
Weight	6.8 kg
Mounting diameter	See above drawing
Materials	Hot dip galvanized steel
Versions	-
Options	-

Aerial Oy
Box 22
04401 Järvenpää
Finland
Tel. +358 9 2790 120
Fax +358 9 2910 210
http://www.aerial.fi
aerial@aerial.fi

TUBE MOUNTING SET AETM50-300-1

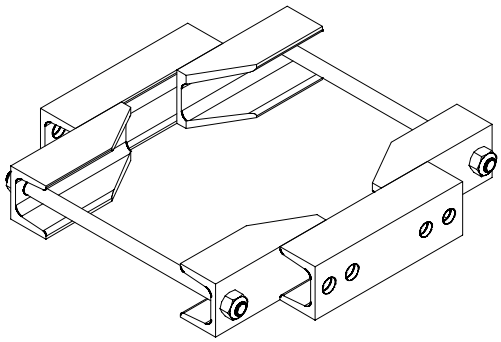

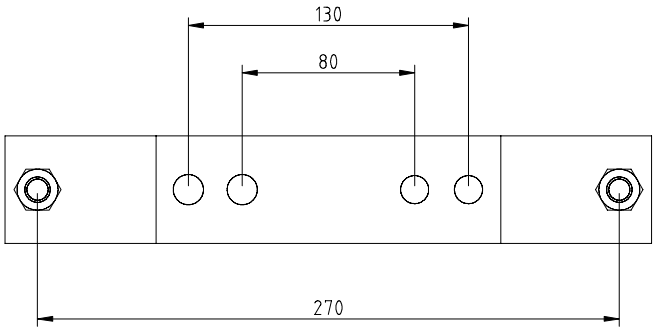

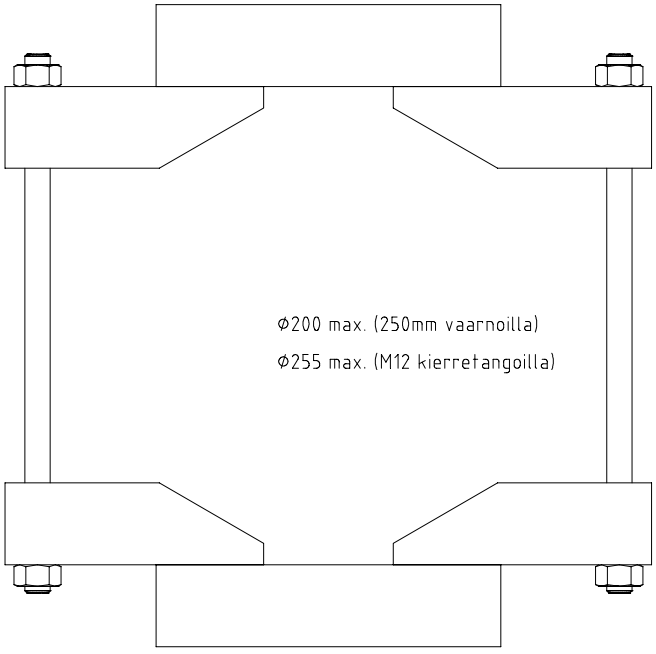

Type	AETM50-300-1
Dimensions (H x W x D) (∅ x H)	See above drawing
Weight	5.5 kg
Mounting diameter	See above drawing
Materials	Hot dip galvanized steel
Versions	-
Options	-

Aerial Oy
Box 22
04401 Järvenpää
Finland
Tel. +358 9 2790 120
Fax +358 9 2910 210
http://www.aerial.fi
aerial@aerial.fi

TUBE MOUNTING SET AETM50-380-1

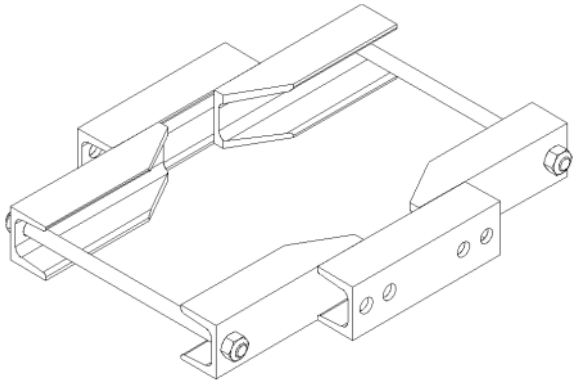

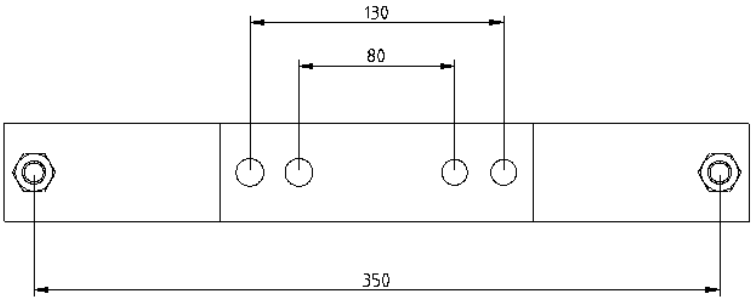

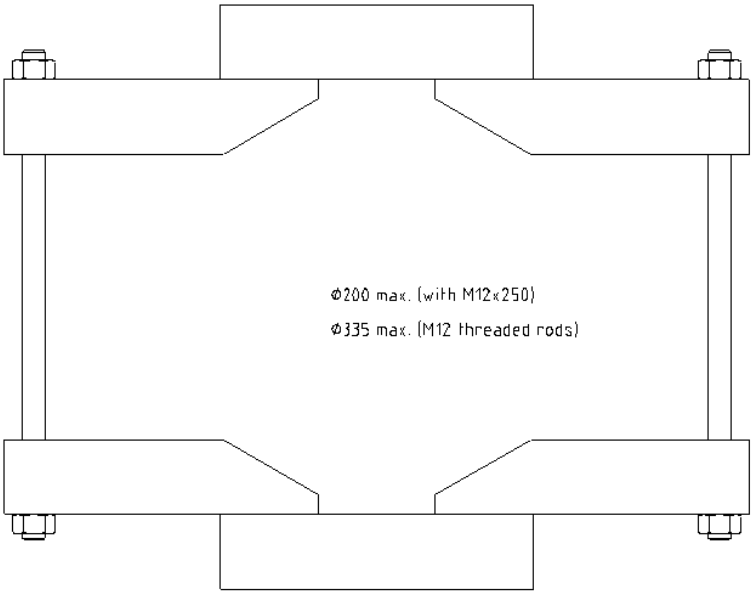

Type	AETM50-380-1
Dimensions (H x W x D) (∅ x H)	See above drawing
Weight	5.5 kg
Mounting diameter	See above drawing
Materials	Hot dip galvanized steel
Versions	-
Options	-

Aerial Oy
Box 22
04401 Järvenpää
Finland
Tel. +358 9 2790 120
Fax +358 9 2910 210
http://www.aerial.fi
aerial@aerial.fi

ANTENNA MOUNTING SET AETM160-1

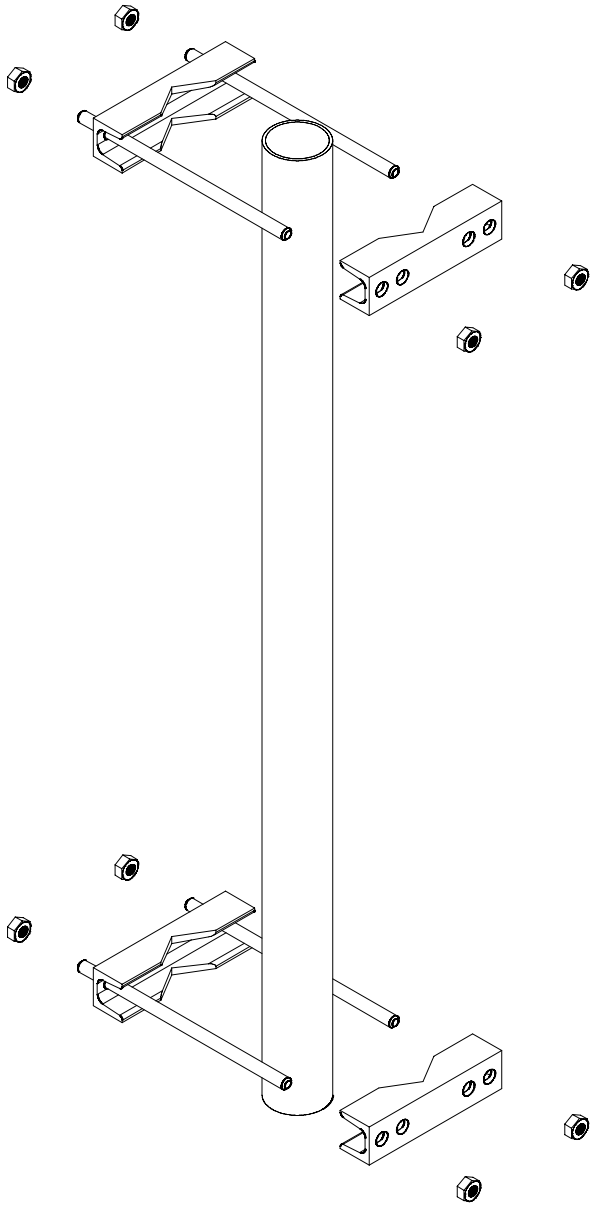

Parts list	pcs
U40-160 clamp	4
M12x250 headless screw	4
M12 nut	8

Type	AETM160-1
Dimensions (H x W x D) (∅ x H)	See above drawing (pipe not included)
Weight	1,9 kg per point
Mounting diameter	50...115 mm pipe
Materials	Hot dip galvanized steel
Versions	-
Options	-

Aerial Oy
Box 22
04401 Järvenpää
Finland
Tel. +358 9 2790 120
Fax +358 9 2910 210
http://www.aerial.fi
aerial@aerial.fi

ANTENNA MOUNTING SET AETM160-2

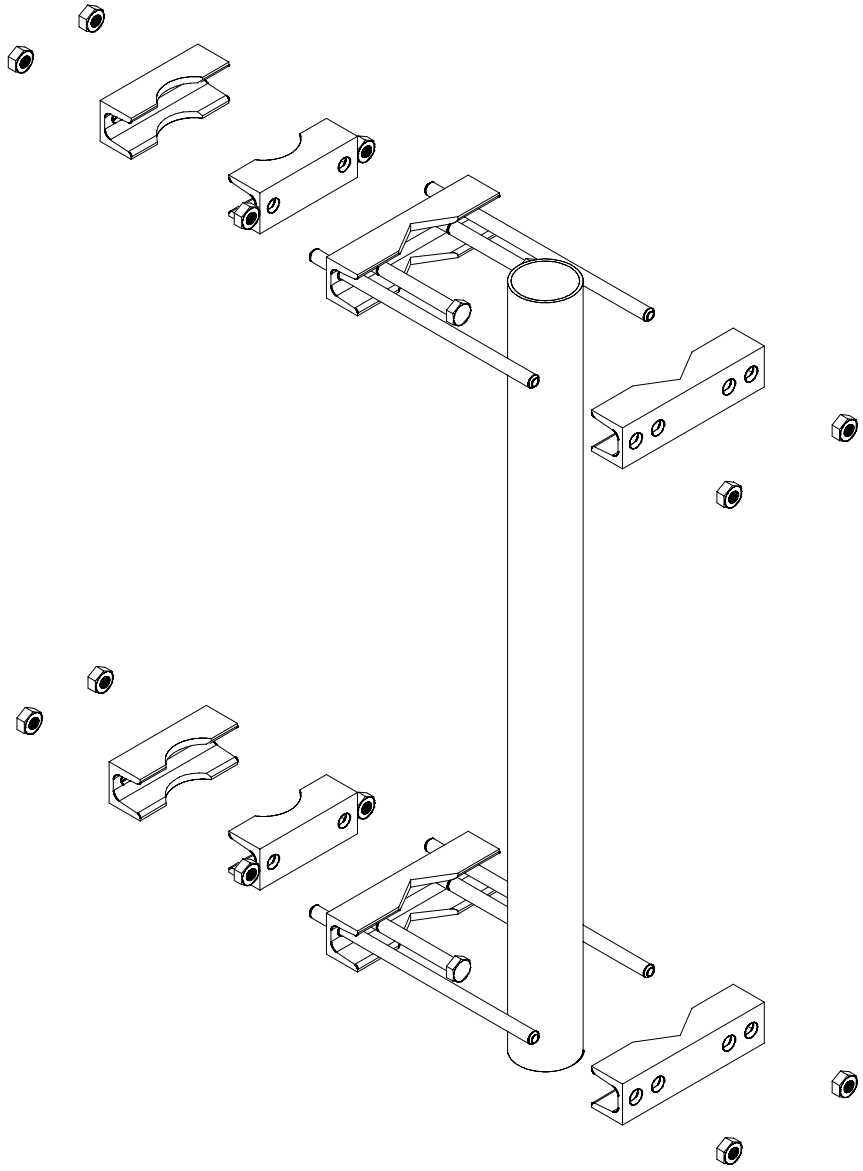

Parts list	pcs
U40-160 clamp	4
U40-110 clamp	4
M12x250 headless screw	4
M12x100 screw	4
M12 nut	12

Type	AETM160-2
Dimensions (H x W x D) (∅ x H)	See above drawing (pipe not included)
Weight	1,9 kg per point
Mounting diameter	50...115 mm pipe 60 mm mounting pipe
Materials	Hot dip galvanized steel
Versions	-
Options	-

Aerial Oy
Box 22
04401 Järvenpää
Finland
Tel. +358 9 2790 120
Fax +358 9 2910 210
http://www.aerial.fi
aerial@aerial.fi

ANTENNA MOUNTING SET AETM160-3

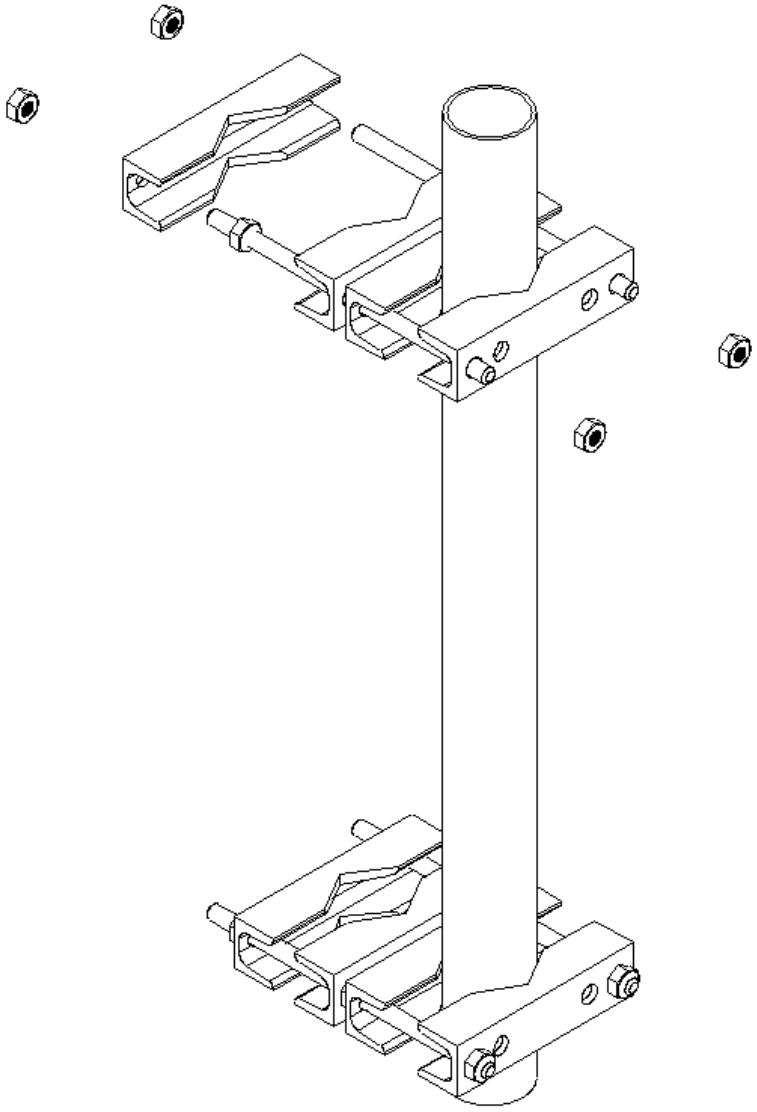

Parts list	pcs
U40-160 clamp	8
M12x250 headless screw	4
M12 nut	16

Type	AETM160-3
Dimensions (H x W x D) (∅ x H)	See above drawing (pipe not included)
Weight	3.5 kg per point
Mounting diameter	50...115 mm pipe 50...115 mm mounting pipe
Materials	Hot dip galvanized steel
Versions	-
Options	-

Aerial Oy
Box 22
04401 Järvenpää
Finland
Tel. +358 9 2790 120
Fax +358 9 2910 210
http://www.aerial.fi
aerial@aerial.fi

ANTENNA MOUNTING SET AETM160-4

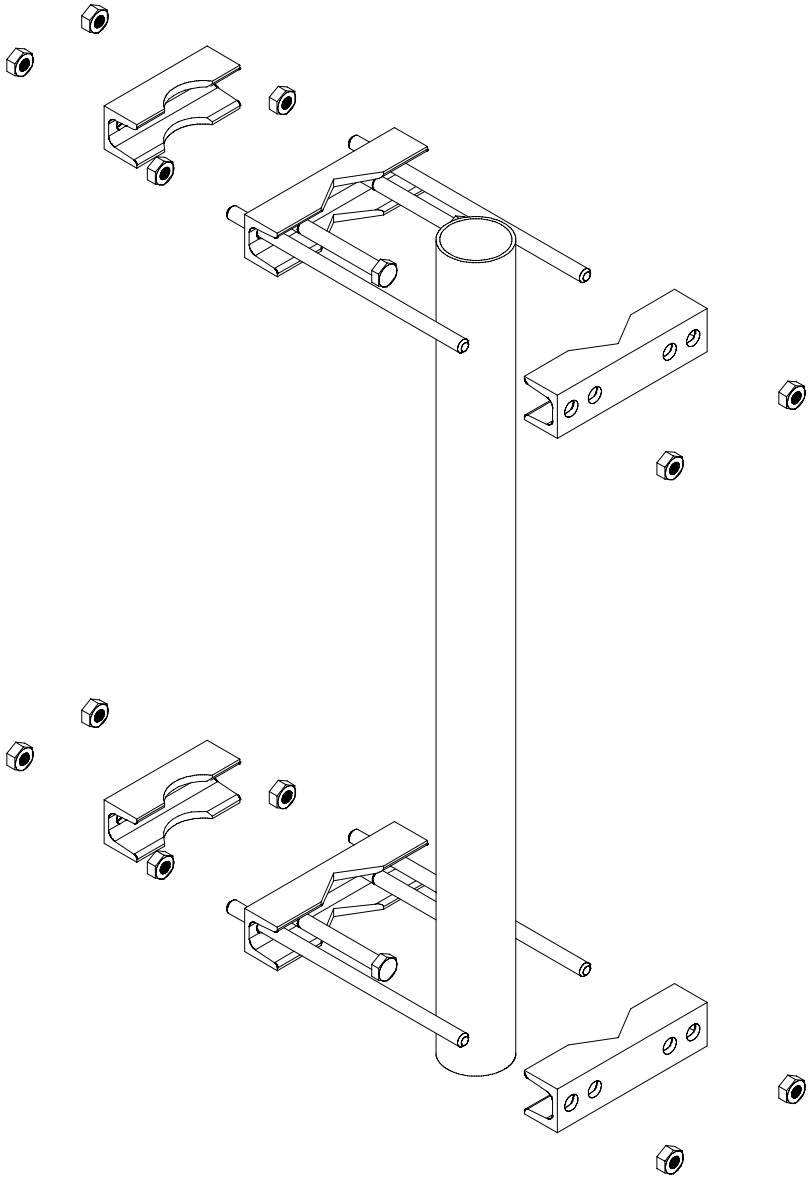

Parts list	pcs
U40-160 clamp	4
U40-110 clamp	2
M12x250 headless screw	4
M12x100 screw	4
M12 nut	12

Type	AETM160-4
Dimensions (H x W x D) (∅ x H)	See above drawing (pipe not included)
Weight	2,6 kg per point
Mounting diameter	50...115 mm pipe 60mm mounting pipe
Materials	Hot dip galvanized steel
Versions	-
Options	-

Aerial Oy
Box 22
04401 Järvenpää
Finland
Tel. +358 9 2790 120
Fax +358 9 2910 210
http://www.aerial.fi
aerial@aerial.fi

ANTENNA MOUNTING SET AETM160-5

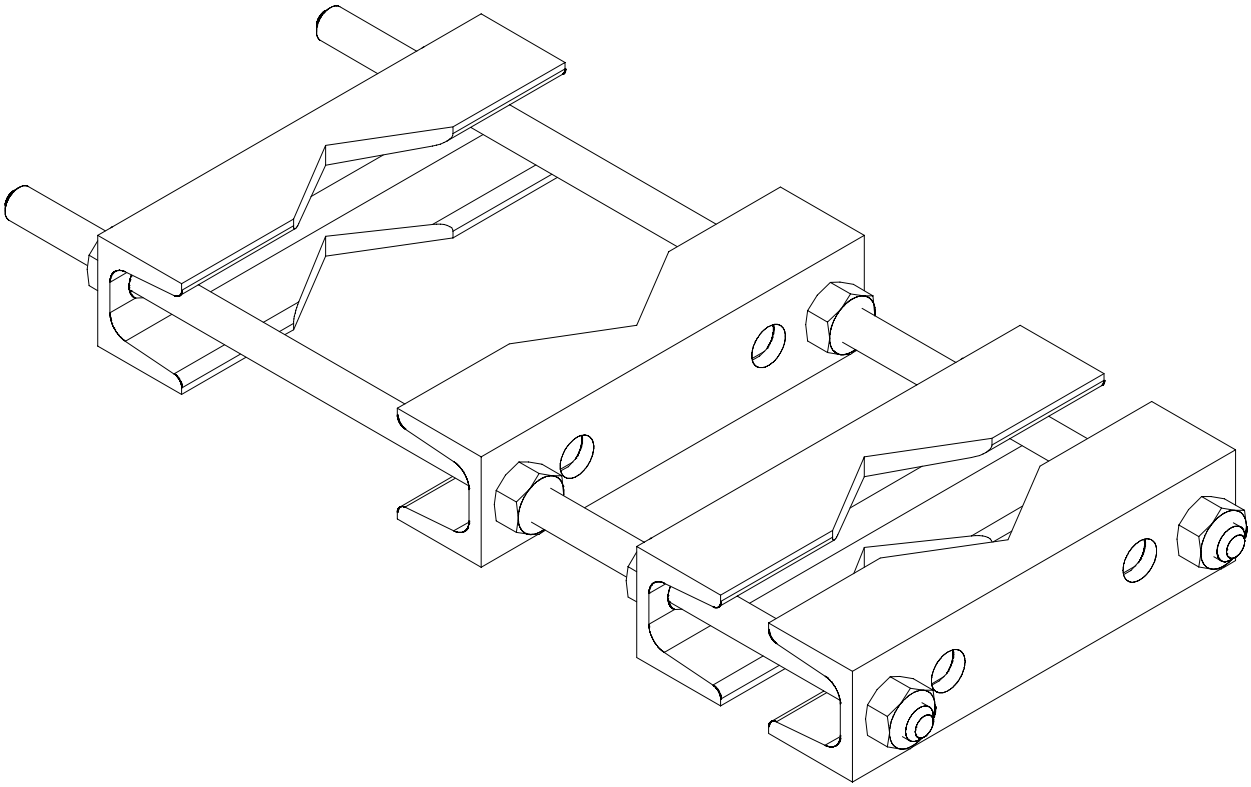

Parts list	pcs
U40-160 clamp	4
M12x250 headless screw	2
M12 nut	8

Type	AETM160-5
Dimensions (H x W x D) (∅ x H)	See above drawing
Weight	1,9 kg
Mounting diameter	50...115 mm pipe
Materials	Hot dip galvanized steel
Versions	-
Options	-

Aerial Oy
Box 22
04401 Järvenpää
Finland
Tel. +358 9 2790 120
Fax +358 9 2910 210
http://www.aerial.fi
aerial@aerial.fi

ANTENNA MOUNTING SET AETM160-6

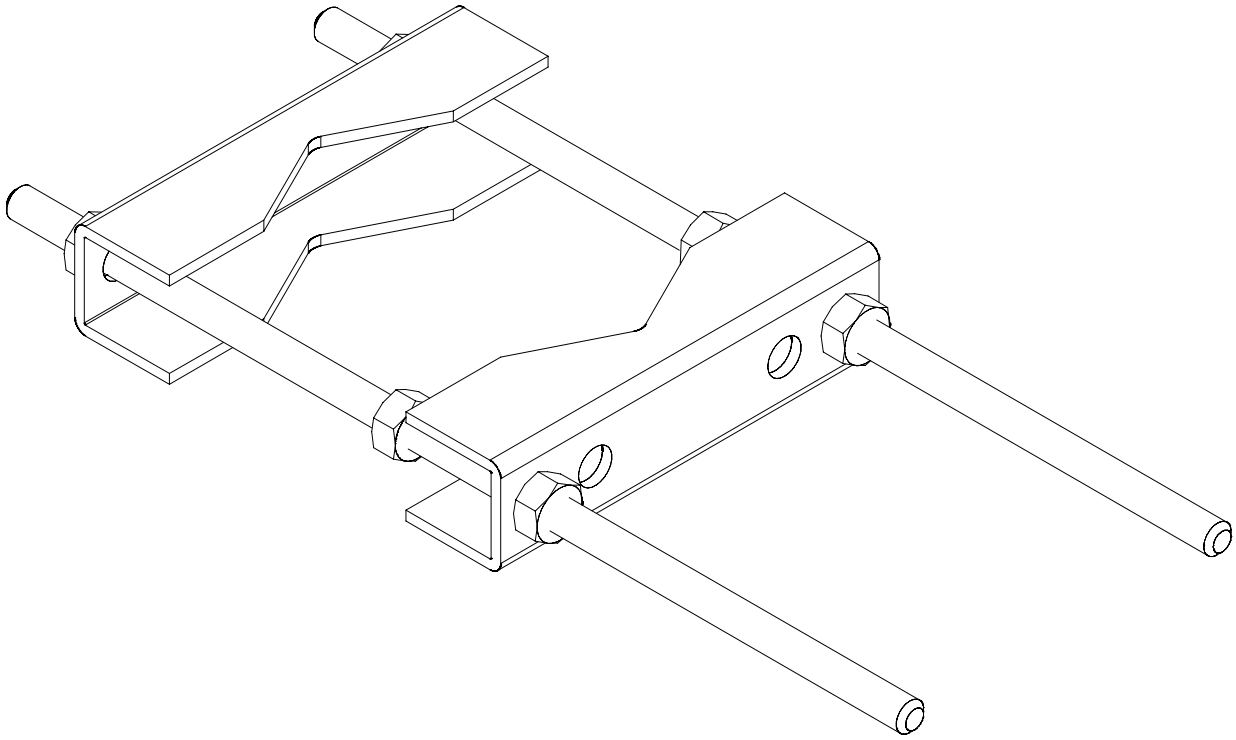

Parts list	pcs
U40-160L clamp	2
M12x250 headless screw	2
M12 nut	6

Type	AETM160-6
Dimensions (H x W x D) (∅ x H)	See above drawing
Weight	1,0 kg per point
Mounting diameter	50...115 mm pipe
Materials	Hot dip galvanized steel
Versions	-
Options	-

Aerial Oy
Box 22
04401 Järvenpää
Finland
Tel. +358 9 2790 120
Fax +358 9 2910 210
http://www.aerial.fi
aerial@aerial.fi

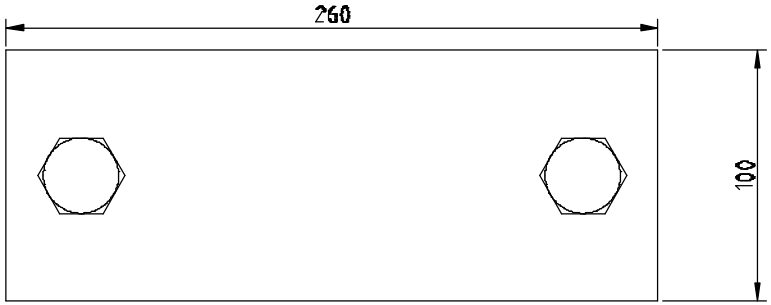

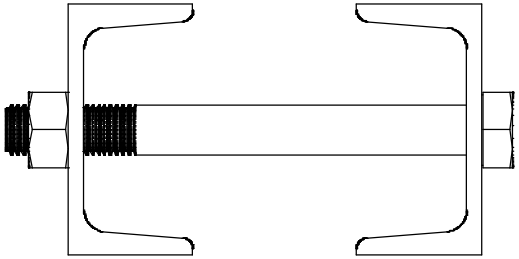

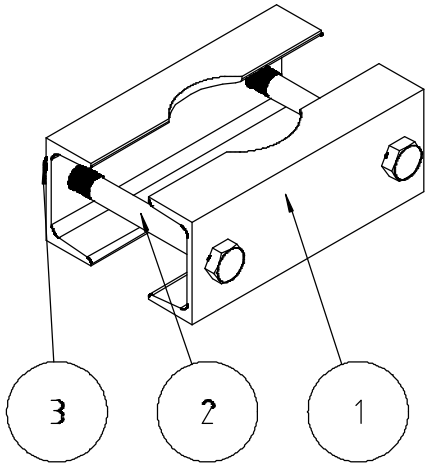

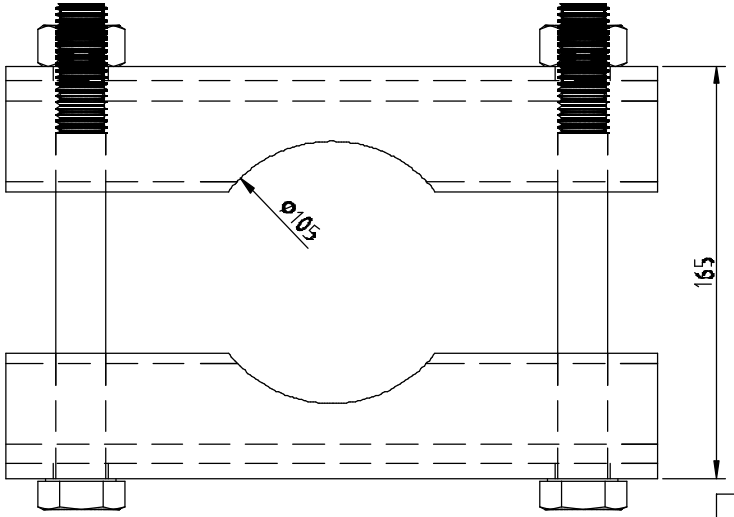

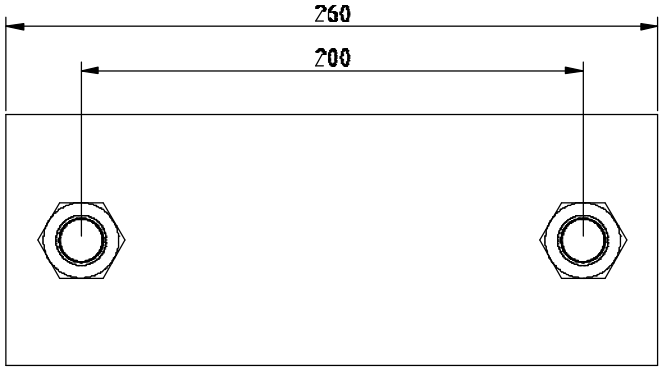

AEMK260-1

Item	Qty	Name	Description	Standard	Note
1	2	AE260-1	Kiinnityspala		
2	2	HEX-HEAD BOLT - DIN 931-1 - M20 X 190_1	Kuusiokantaruuvi	DIN 931-1 - M20 x 190	
3	2	HEXAGON NUT - DIN 934 - M20_1	Kuusiomutteri	DIN 934 - M20	

Suunn.	9.12.1999	at	Mittakaava 1:2	Liittyy AETM100-260-1	Nimitys 1 AETM100-260-1
Piirt.	9.12.1999	at		Toleranssiluokka middle	Nimitys 2 Kiinnityspalasarja ø105 putkelle
Tark.	9.12.1999	at			Nimitys 3
Hyv.	9.12.1999	at			
Tulostuspvm 09.12.1999				Aerial Oy Tel.+358-9-2780 120 Fax.+358-9-2810 210 Box 22 04401 Järvenpää Finland http://www.aerial.fi aerial@aerial.fi	Materiaali 1 Fe37
Massa 6.4 kg					Aihion koko U100
Piirustus					

MOUNTING BRACKET U40-XXX-110-160-1

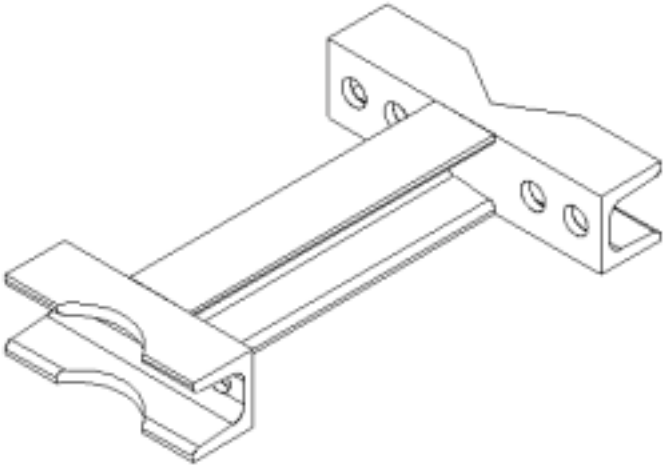

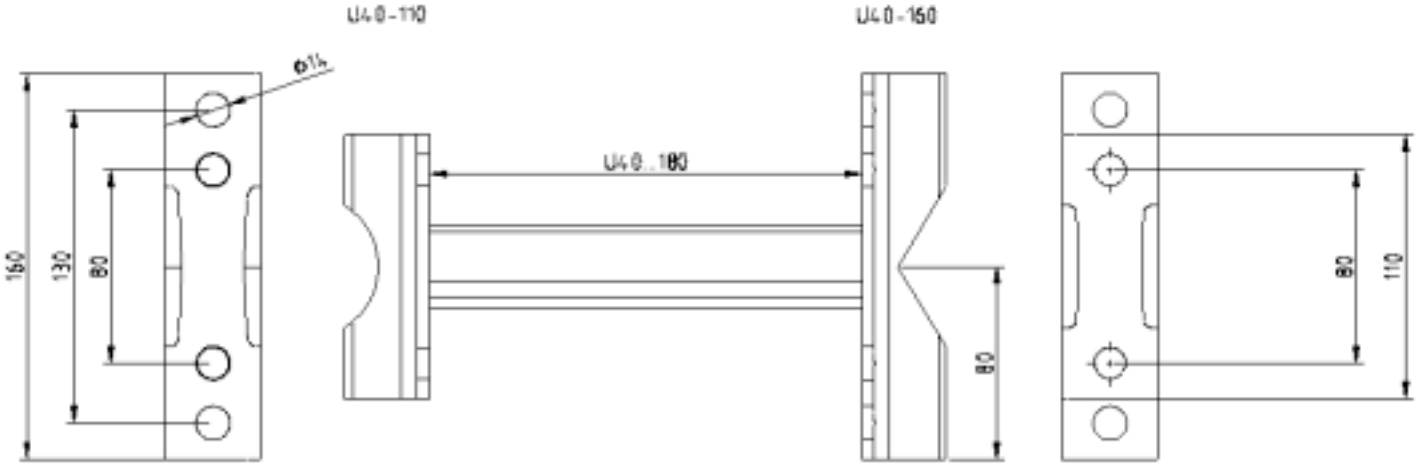

Type	U40-XXX-110-160-1
Dimensions (H x W x D) (∅ x H)	See above drawing XXX=bracket length (180 in picture)
Weight	2.1 kg (180mm bracket)
Materials	Hot dip galvanized steel
Versions	-
Options	-Bracket length (XXX) (100,300,500mm in stock)

Aerial Oy
Box 22
04401 Järvenpää
Finland
Tel. +358 9 2790 120
Fax +358 9 2910 210
http://www.aerial.fi
aerial@aerial.fi

MOUNTING BRACKET U40-110-200-1

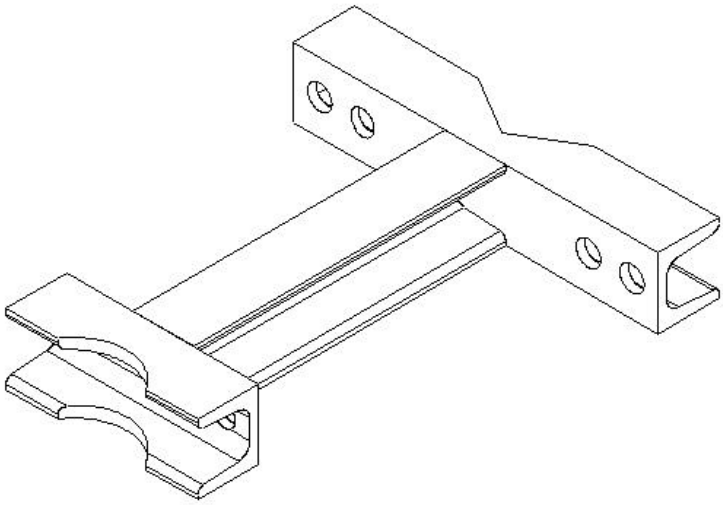

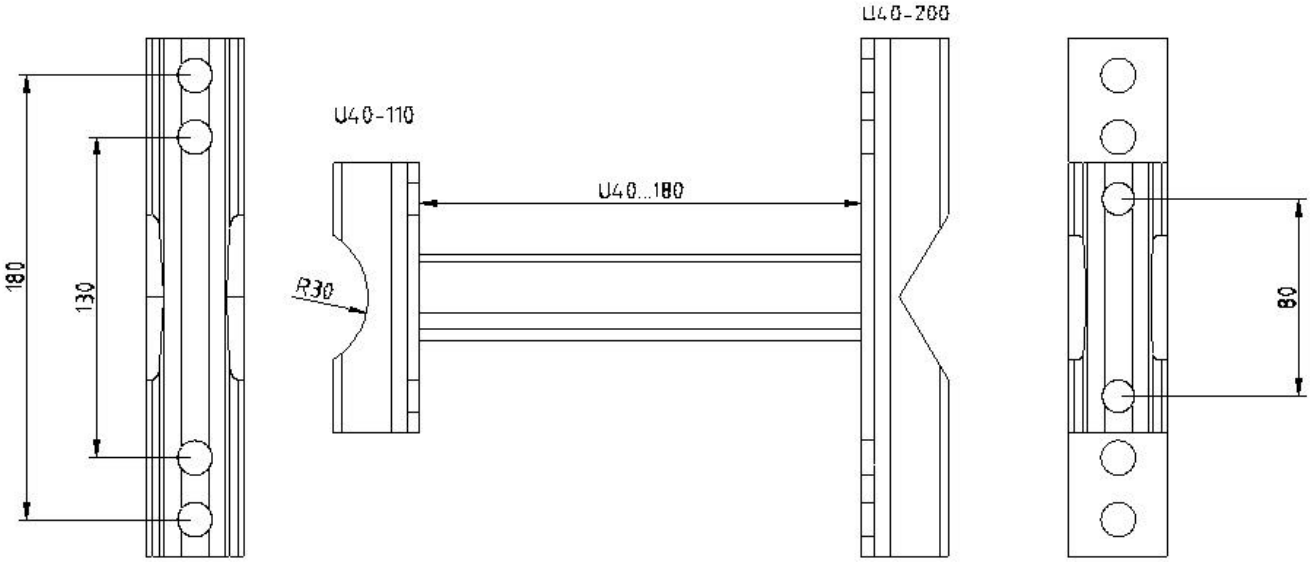

Type	U40-110-200-1
Dimensions (H x W x D) (∅ x H)	See above drawing
Weight	2.3 kg
Materials	Hot dip galvanized steel
Versions	-
Options	Bracket length

Aerial Oy
Box 22
04401 Järvenpää
Finland
Tel. +358 9 2790 120
Fax +358 9 2910 210
http://www.aerial.fi
aerial@aerial.fi

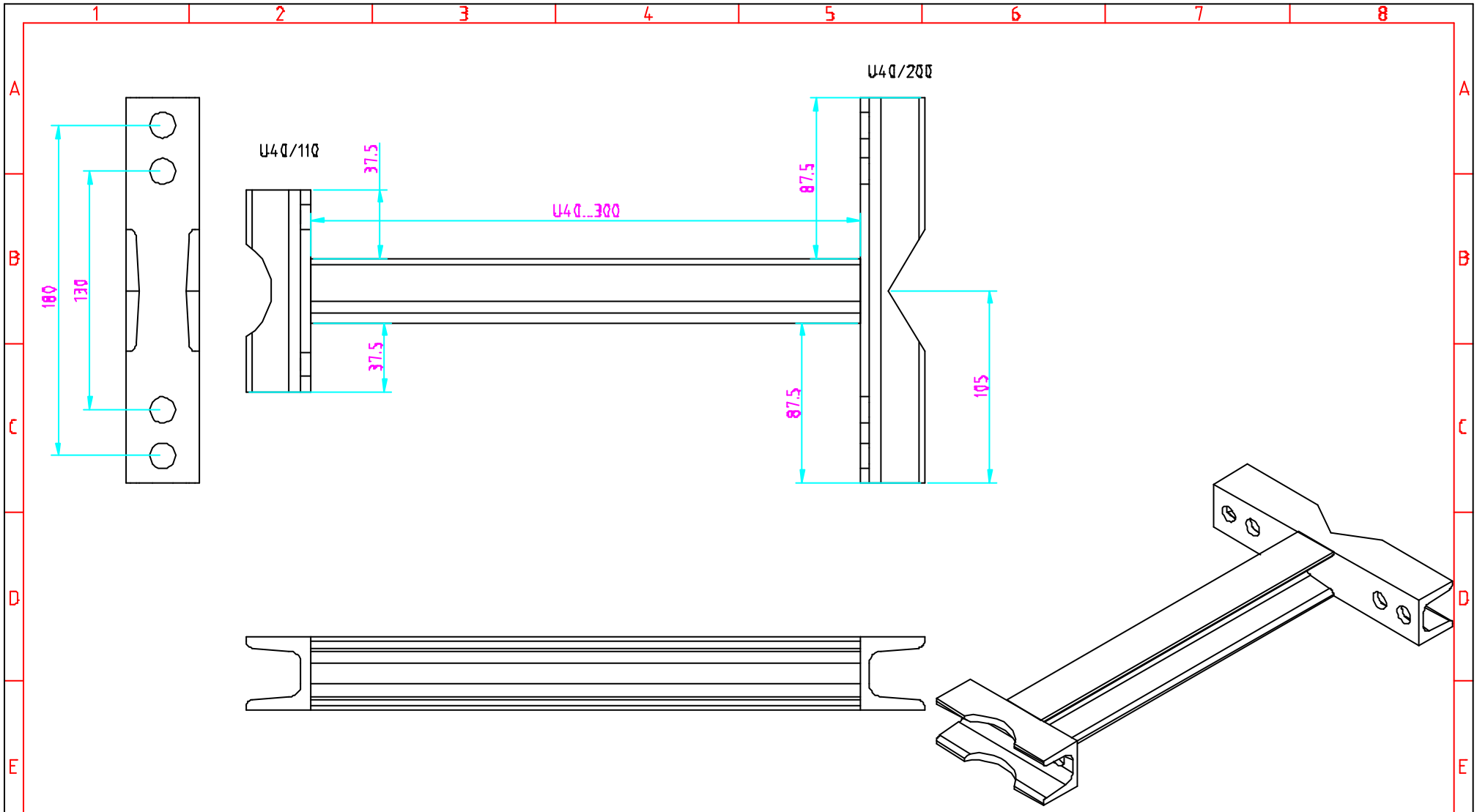

Design	13.2.2001	at	Scale	Associated with	Description 1
Drawn	13.2.2001	at	1:2	Tolerance class	Description 2
Check				middle	U40—300—110—200—1
Approv.					Description 3
Plot Date				Aerial Oy	Material 1
					Fe37
Mass					Outline size
2.9kg					
DWG					

MOUNTING BRACKET U40-XXX-110-160-90-1

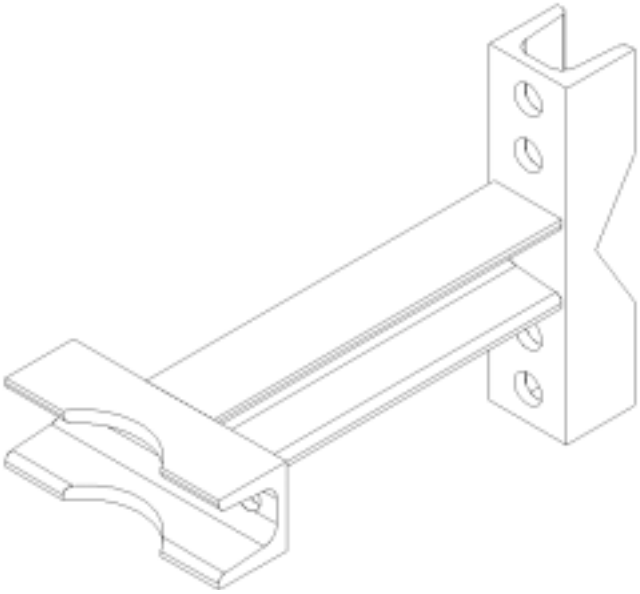

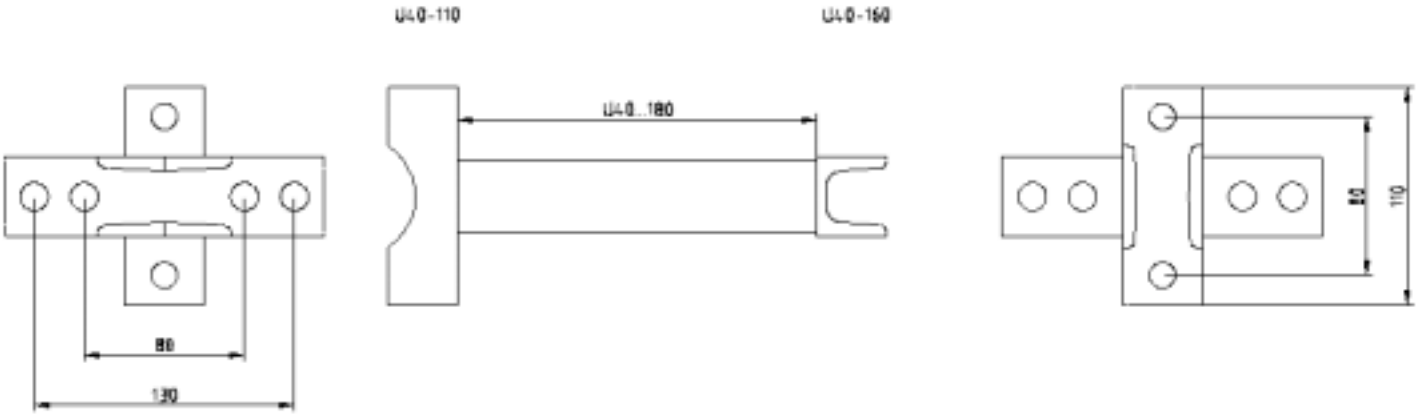

Type	U40-XXX-110-160-90-1
Dimensions (H x W x D) (∅ x H)	See above drawing XXX=bracket length (180 in picture)
Weight	2.2 kg (180mm bracket)
Materials	Hot dip galvanized steel
Versions	-
Options	-Bracket length (XXX) (100,300,500mm in stock)

Aerial Oy
Box 22
04401 Järvenpää
Finland
Tel. +358 9 2790 120
Fax +358 9 2910 210
http://www.aerial.fi
aerial@aerial.fi

MOUNTING BRACKET U40-80-XXX-1

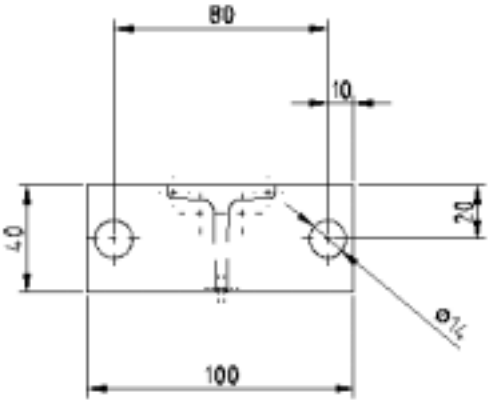

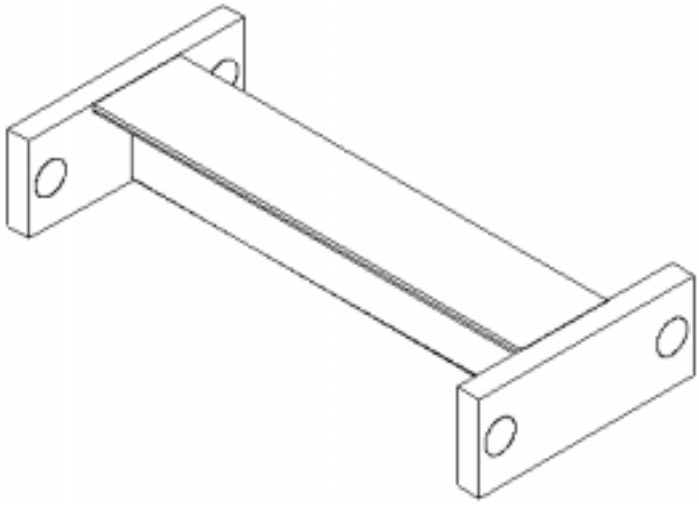

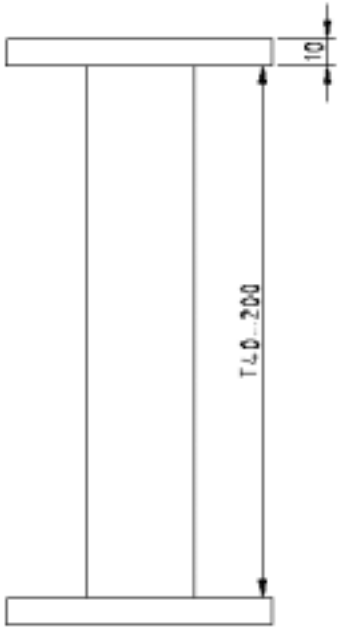

Use to install differnt clamps with offset. All clamps with 80mm hole distance can be used. Use for example between mast leg and assembly pipe, or in wall mountings.

Type	U40-80-XXX-1
Dimensions (H x W x D) (∅ x H)	See dimensions drawing
Weight	0.9kg(200mm) - 2.0kg (500mm)
Mounting diameter	Depending on clamp installed
Materials	Hot dip galvanized steel
Versions	-
Options	Lengths in stock: 100, 200, 300 & 500mm

Aerial Oy
Box 22
04401 Järvenpää
Finland
Tel. +358 9 2790 120
Fax +358 9 2910 210
http://www.aerial.fi
aerial@aerial.fi

MOUNTING BRACKET U40-XXX-110-1

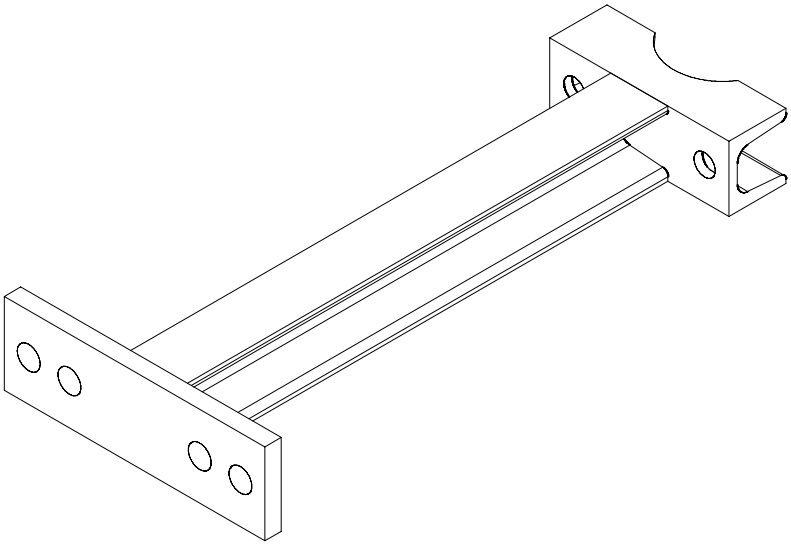

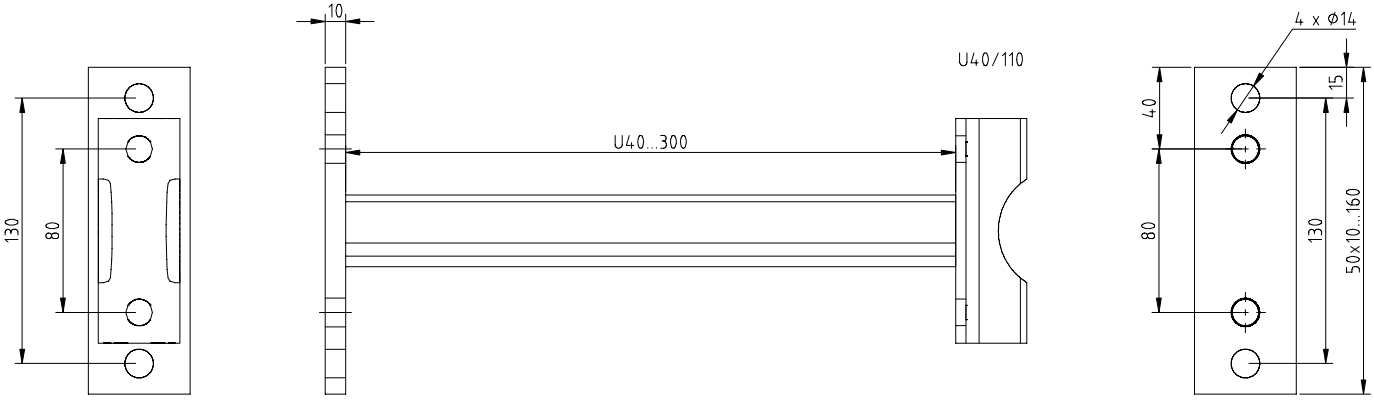

Type	U40-XXX-110-1
Dimensions (H x W x D) (∅ x H)	See above drawing XXX=bracket length (180 in picture)
Weight	1.9 kg
Materials	Hot dip galvanized steel
Versions	-
Options	-Bracket length (XXX) (100,300,500 in stock)

Aerial Oy
Box 22
04401 Järvenpää
Finland
Tel. +358 9 2790 120
Fax +358 9 2910 210
http://www.aerial.fi
aerial@aerial.fi

MOUNTING BRACKET U40-XXX-110-90-1

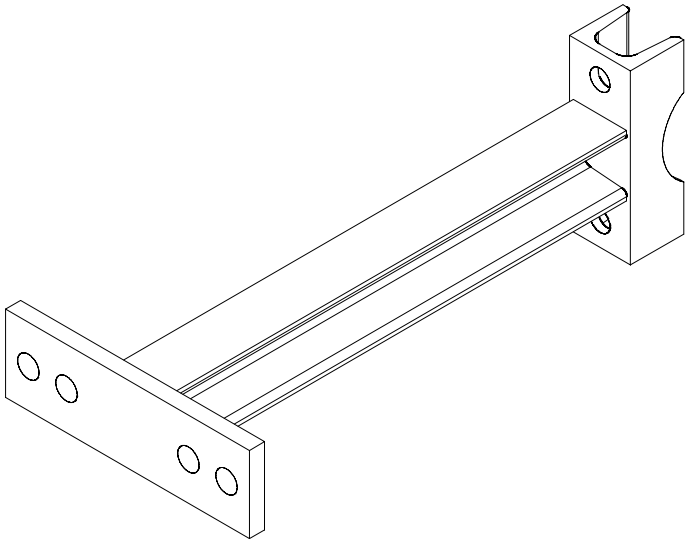

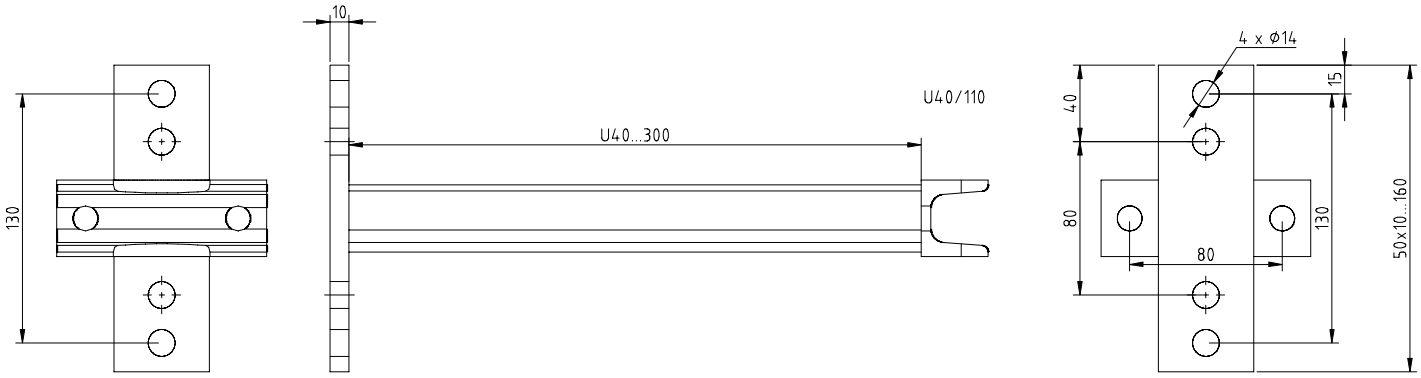

Type	U40-XXX-110-90-1
Dimensions (H x W x D) (∅ x H)	See above drawing XXX=bracket length (180 in picture)
Weight	1.9 kg
Materials	Hot dip galvanized steel
Versions	-
Options	-Bracket length (XXX) (100,300,500 in stock)

Aerial Oy
Box 22
04401 Järvenpää
Finland
Tel. +358 9 2790 120
Fax +358 9 2910 210
http://www.aerial.fi
aerial@aerial.fi

MOUNTING BRACKET U40-XXX-160-1

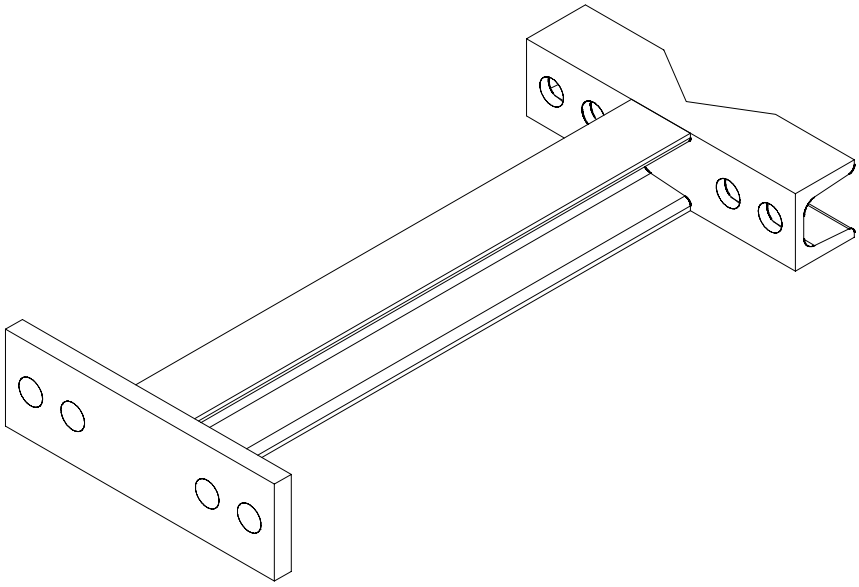

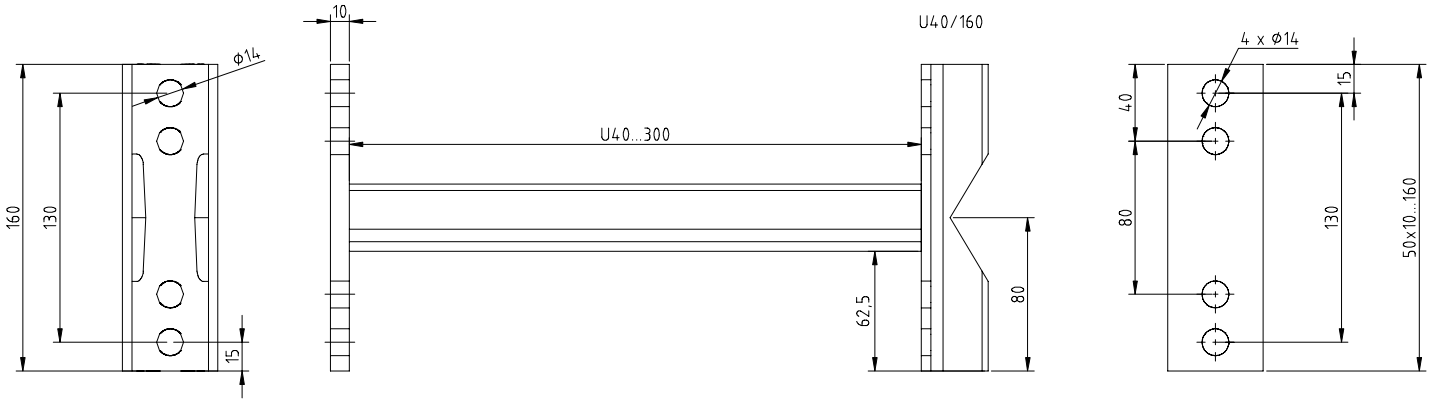

Type	U40-XXX-160-1
Dimensions (H x W x D) (∅ x H)	See above drawing XXX=bracket length (180 in picture)
Weight	2.2 kg
Materials	Hot dip galvanized steel
Versions	-
Options	-Bracket length (XXX) (100,300,500 in stock)

Aerial Oy
Box 22
04401 Järvenpää
Finland
Tel. +358 9 2790 120
Fax +358 9 2910 210
http://www.aerial.fi
aerial@aerial.fi

MOUNTING BRACKET U40-XXX-160-90-1

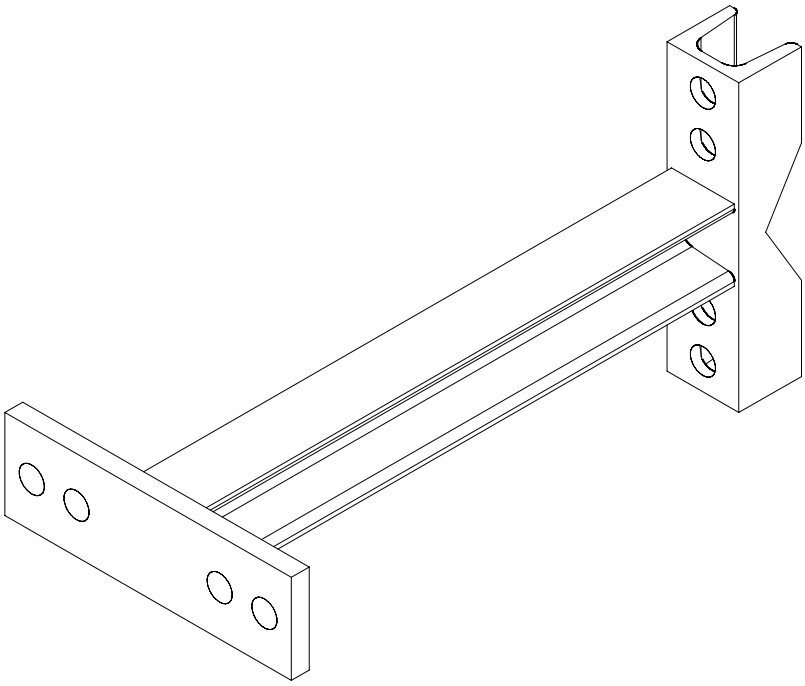

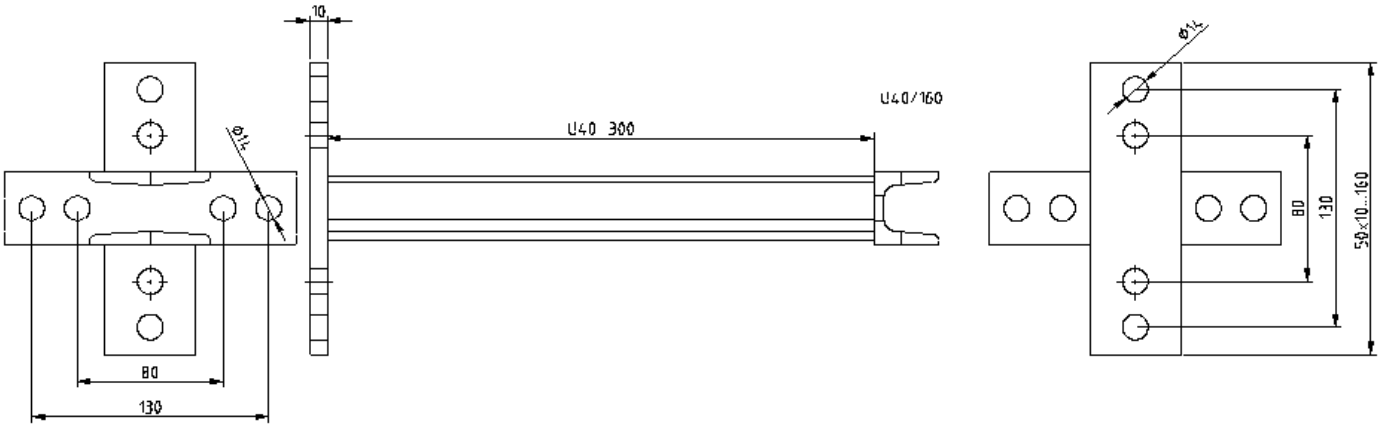

Type	U40-XXX-160-90-1
Dimensions (H x W x D) (∅ x H)	See above drawing XXX=bracket length (180 in picture)
Weight	2.1 kg (180mm bracket)
Materials	Hot dip galvanized steel
Versions	-
Options	-Bracket length (XXX) (100,300,500mm in stock)

Aerial Oy
Box 22
04401 Järvenpää
Finland
Tel. +358 9 2790 120
Fax +358 9 2910 210
http://www.aerial.fi
aerial@aerial.fi

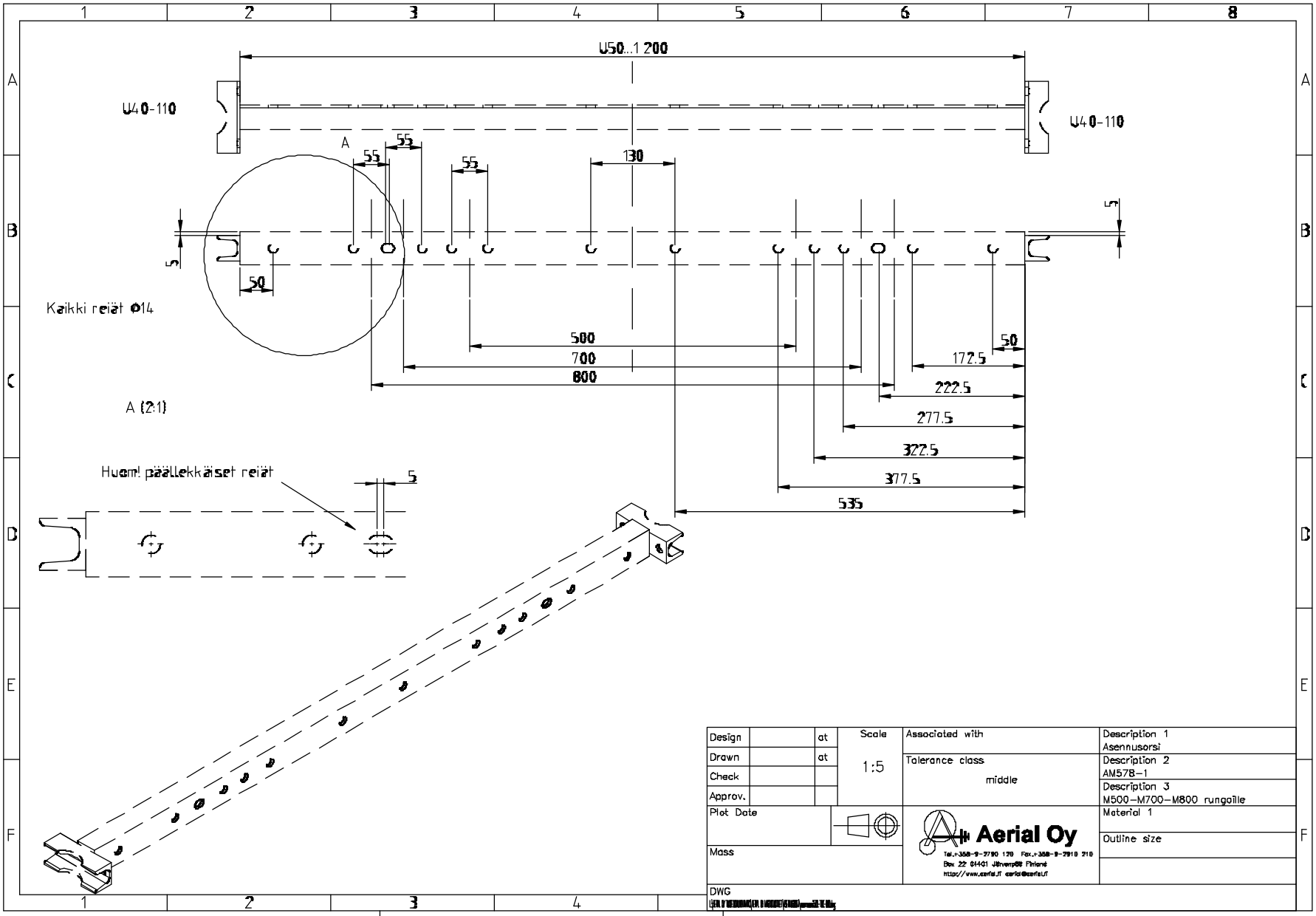

Design		at	Scale	Associated with	Description 1 Asennusorsi
Drawn		at	1:5	Talerance class middle	Description 2 AM578-1
Check					Description 3 M500-M700-M800 rungoille
Approv.					
Plot Date				Aerial Oy Tel.+358-9-2790 120 Fax.+358-9-2919 210 Box 22 01401 Jätevantaa Finland http://www.aerial.fi aerial@aerial.fi	Material 1
Mass					Outline size
DWG					

Mounting braket U40-300-160-160

Lengths: 360, 460, 560 m

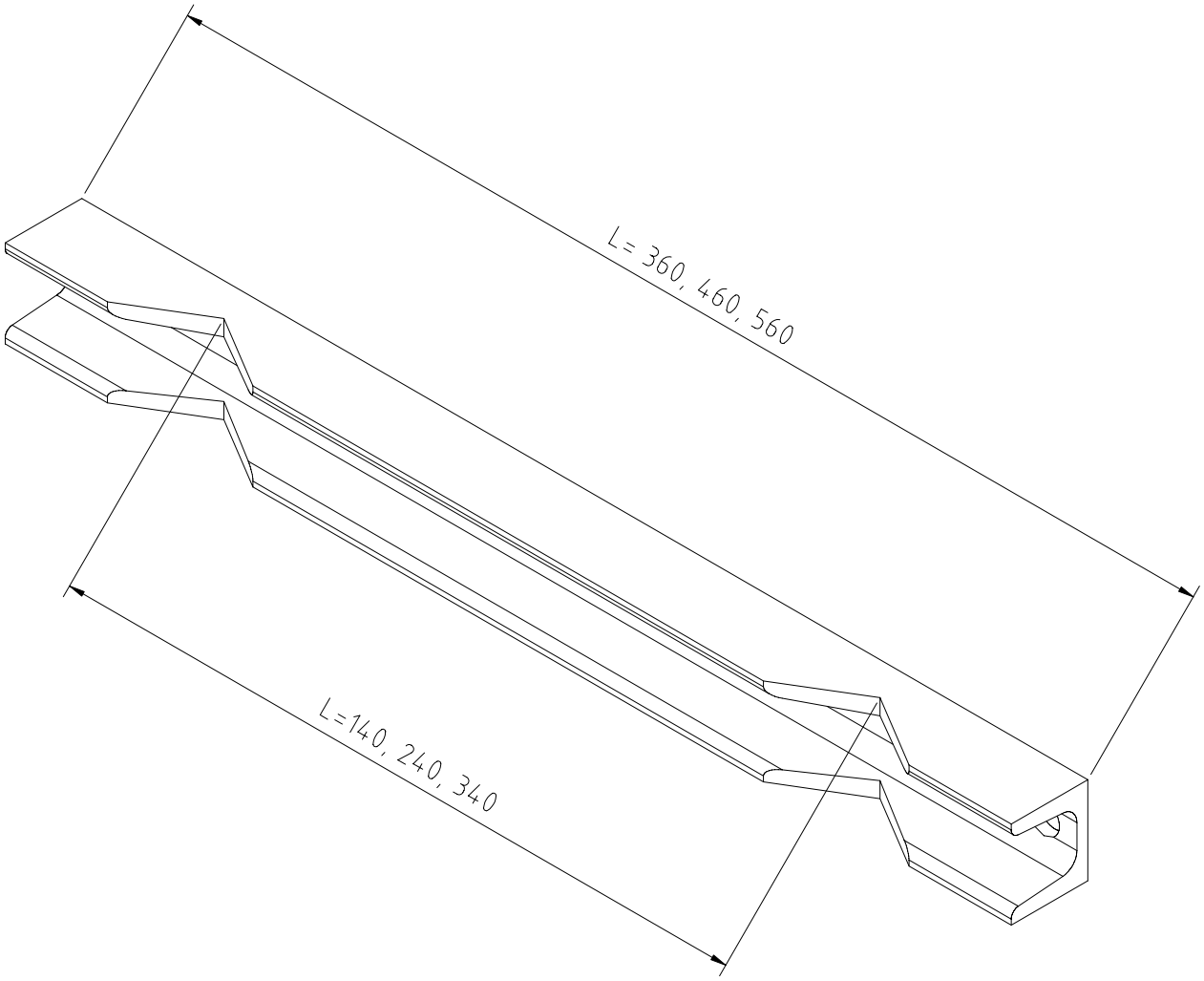

Aerial Oy
Box 22
04401 Järvenpää
Finland
Tel. +358 9 2790 120
Fax +358 9 2910 210
http://www.aerial.fi
aerial@aerial.fi

AEVU2-XXX-X MOUNTING CLAMP SET

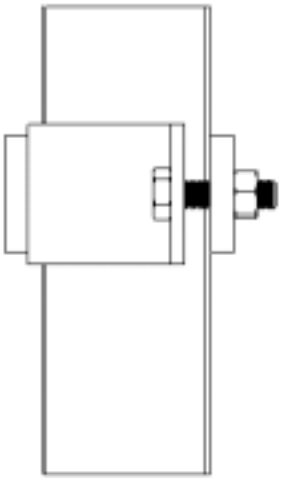

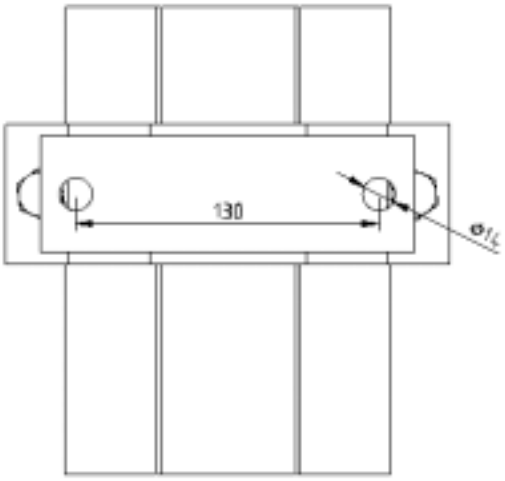

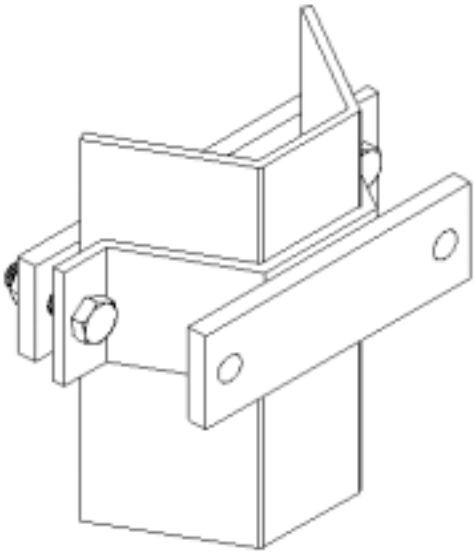

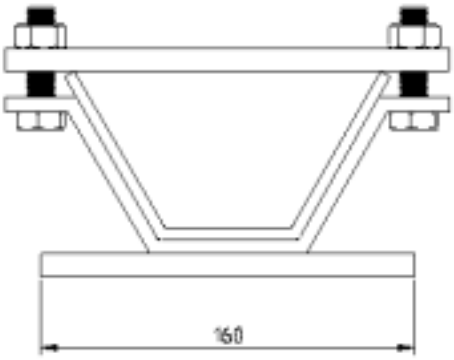

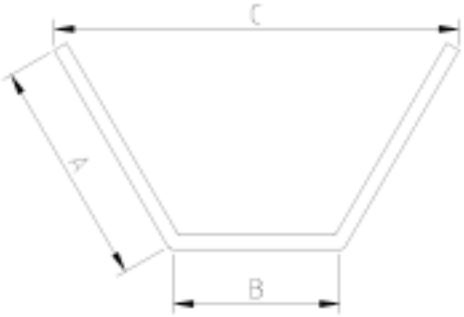

Type	AEVU2-XXX-X
Dimensions (H x W x D) (∅ x H)	See below
Weight	1.5kg up
Mounting diameter	see below
Materials	Hot dip galvanised steel
Versions (AxBxC)	AEVU-50-1 (50x40x95) AEVU-65-1 (65x55x120) AEVU-75-1 (75x66x141) AEVU-80-1 (80x60x160) AEVU-90-1 (90x78x168) AEVU-100-1 (100x70x175) AEVU-105-1 (105x91x196) AEVU-120-1 (120x80x210) AEVU-120-2 (120x105x225) AEVU-135-1 (135x120x255)

Aerial Oy
Box 22
04401 Järvenpää
Finland
Tel. +358 9 2790 120
Fax +358 9 2910 210
http://www.aerial.fi
aerial@aerial.fi

AML60-120-1

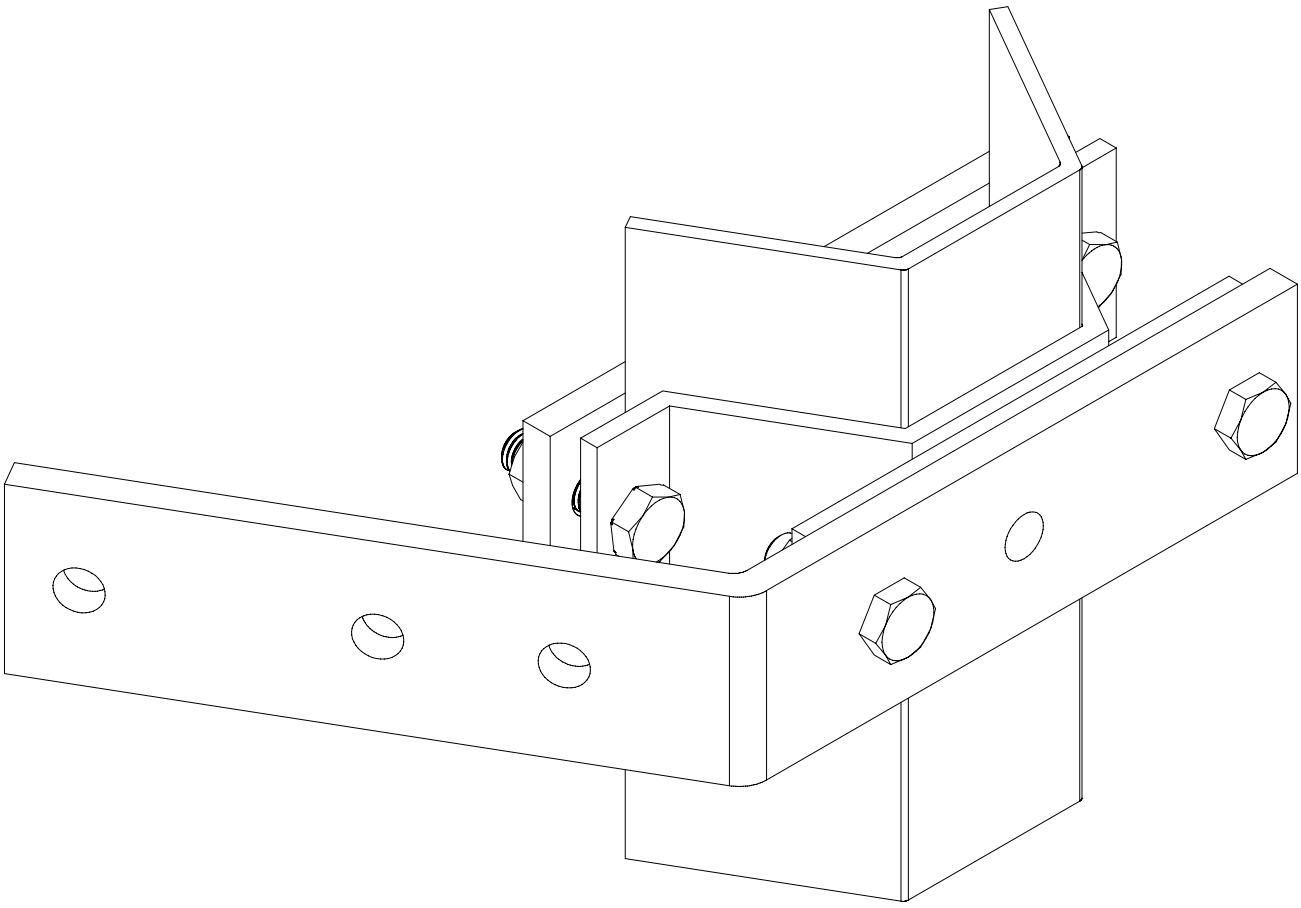

Aerial Oy

Box 22
04401 Järvenpää
Finland

Tel. +358 9 2790 120
Fax +358 9 2910 210

http://www.aerial.fi
aerial@aerial.fi

L-PROFILE MOUNTING BRACKET AELM220-130-1

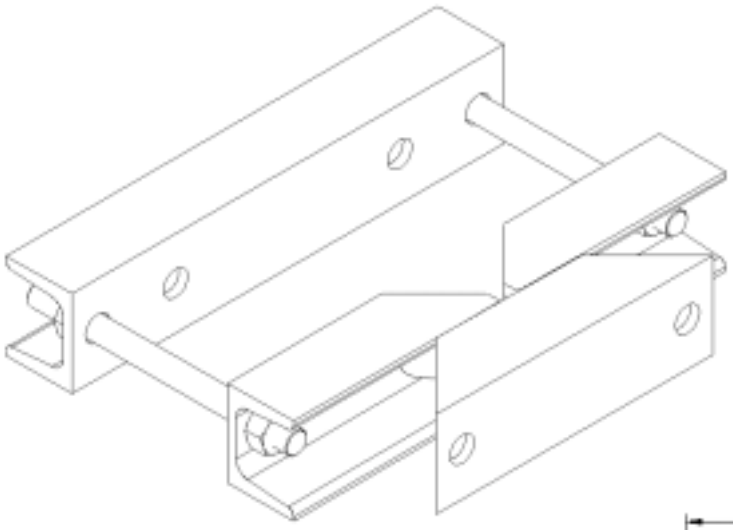

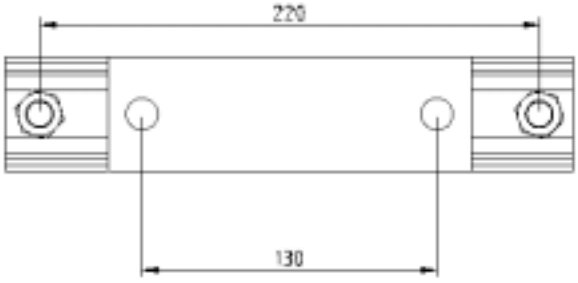

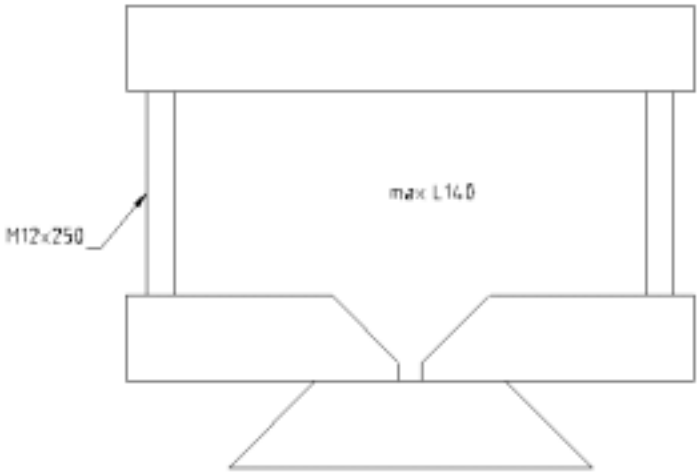

Type	AELM220-130-1
Dimensions (H x W x D) (∅ x H)	See above drawing
Weight	3.5 kg
Mounting diameter	L140 max profile ∅ 30...115 mm pipe
Materials	Hot dip galvanized steel
Versions	-
Options	-

Aerial Oy
Box 22
04401 Järvenpää
Finland
Tel. +358 9 2790 120
Fax +358 9 2910 210
http://www.aerial.fi
aerial@aerial.fi

L-PROFILE MOUNTING BRACKET AELM170-400-1

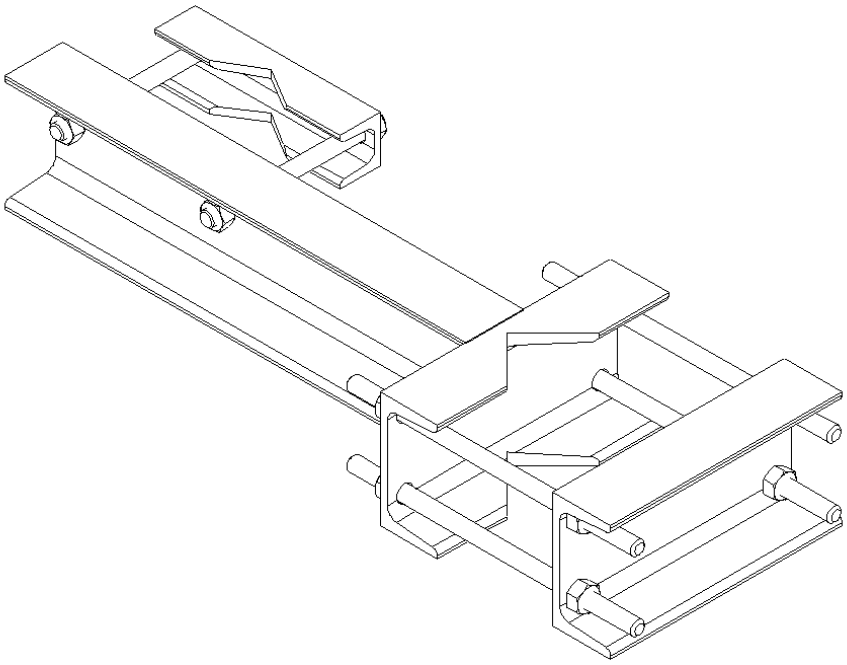

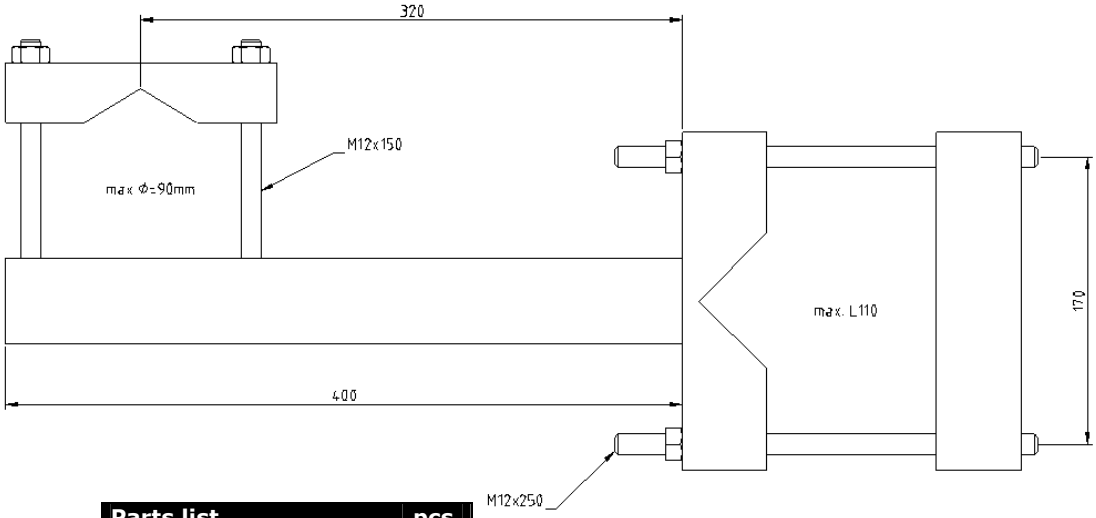

Parts list	pcs
UL170-1 clamp	1
UI170-400-1 clamp	1
U40-160 clamp	1
M12x250 headless screw	4
M12x150 headless screw	2
M12 nut	12

Type	AELM170-400-1
Dimensions (H x W x D) (∅ x H)	See above drawing
Weight	10 kg
Mounting diameter	L110 max profile ∅ 30…115 mm pipe
Materials	Hot dip galvanized steel
Versions	-
Options	-

Aerial Oy
Box 22
04401 Järvenpää
Finland
Tel. +358 9 2790 120
Fax +358 9 2910 210
http://www.aerial.fi
aerial@aerial.fi

L-PROFILE MOUNTING BRACKET AELM170-400-2

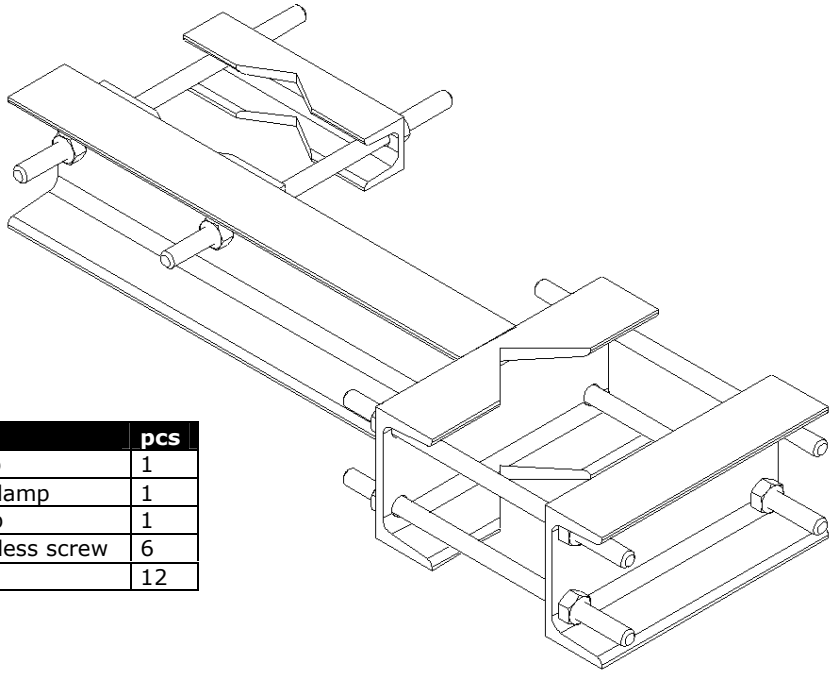

Parts list	pcs
UL170-1 clamp	1
UI170-400-1 clamp	1
U40-160 clamp	1
M12x250 headless screw	6
M12 nut	12

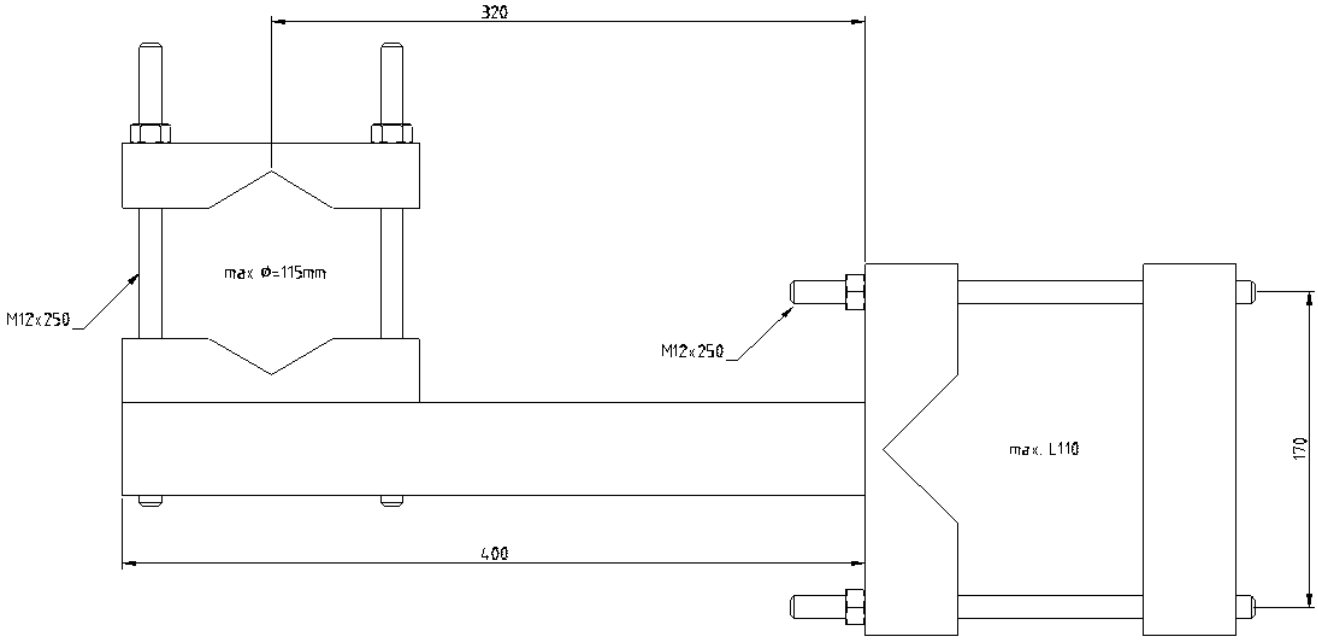

Type	AELM170-400-2
Dimensions (H x W x D) (∅ x H)	See above drawing
Weight	11 kg
Mounting diameter	L110 max profile ∅ 30…115 mm pipe
Materials	Hot dip galvanized steel
Versions	-
Options	-

Aerial Oy
Box 22
04401 Järvenpää
Finland
Tel. +358 9 2790 120
Fax +358 9 2910 210
http://www.aerial.fi
aerial@aerial.fi

L-PROFILE MOUNTING BRACKET AELM170-400-3

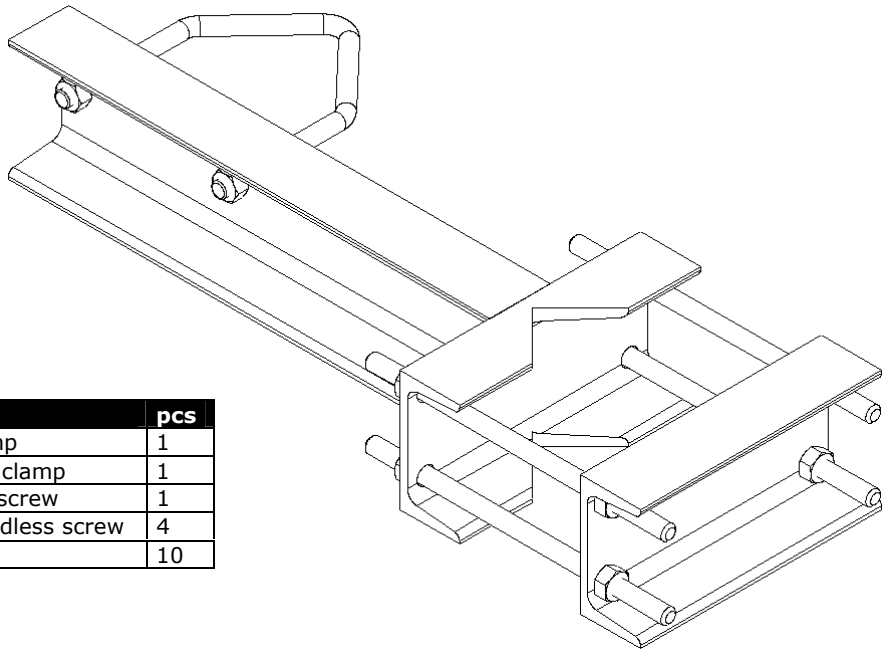

Parts list	pcs
UL170-1 clamp	1
UI170-400-1 clamp	1
VU130-1 VU-screw	1
M12x250 headless screw	4
M12 nut	10

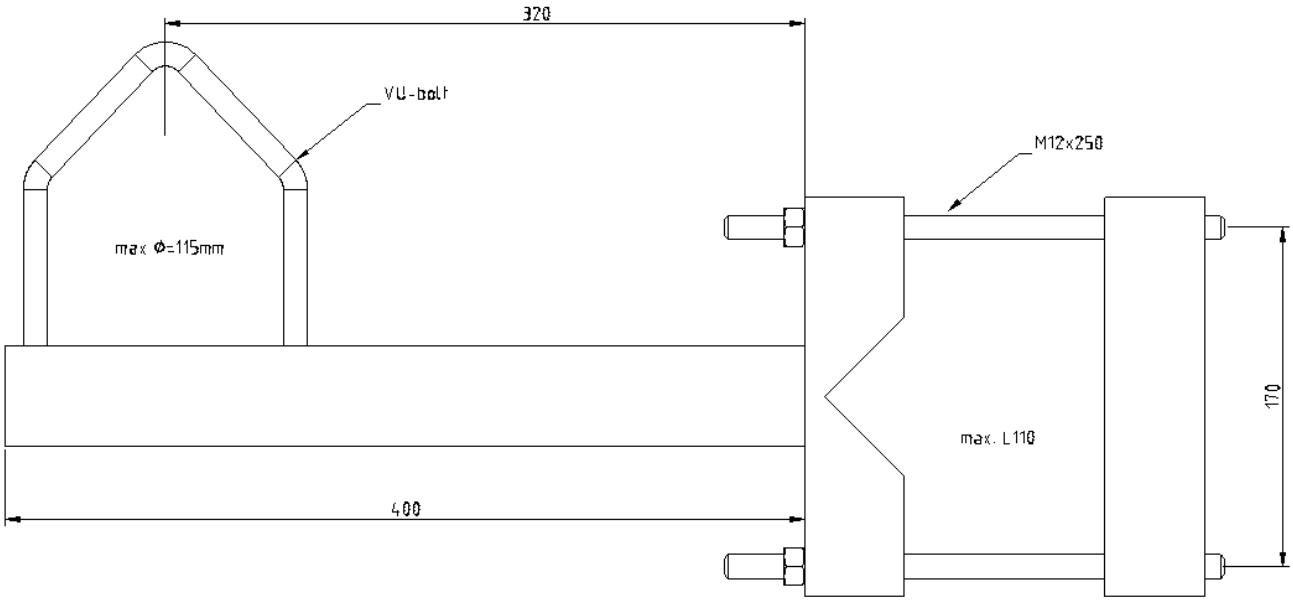

Type	AELM170-400-3
Dimensions (H x W x D) (∅ x H)	See above drawing
Weight	9.5 kg
Mounting diameter	L110 max profile ∅ 30…115 mm pipe
Materials	Hot dip galvanized steel
Versions	-
Options	-

Aerial Oy
Box 22
04401 Järvenpää
Finland
Tel. +358 9 2790 120
Fax +358 9 2910 210
http://www.aerial.fi
aerial@aerial.fi

L-PROFILE MOUNTING BRACKET AELM220-250-1

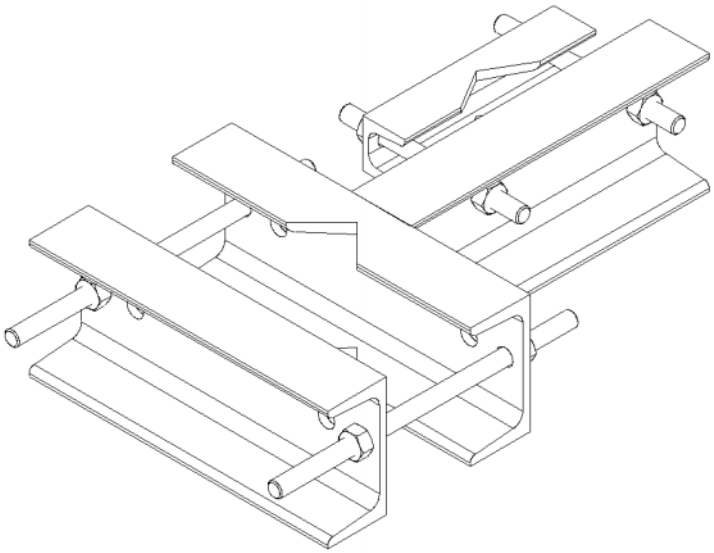

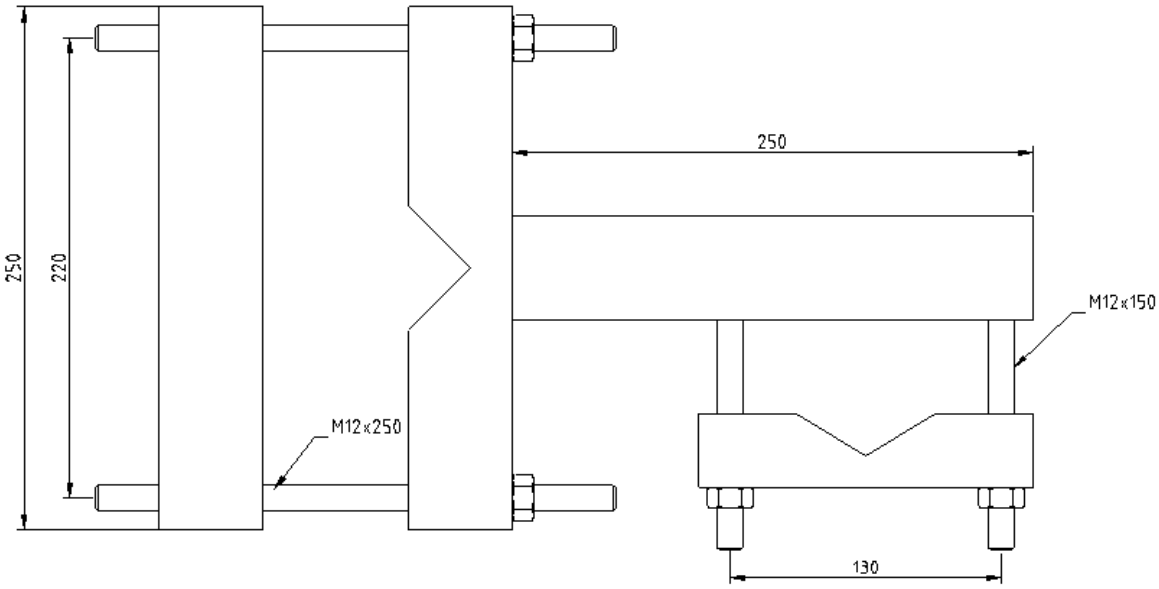

Parts list	pcs
UL220-1 clamp	1
UL220-250-1 clamp	1
U40-160 clamp	1
M12x250 headless screw	2
M12x150 headless screw	2
M12 nut	8

Type	AELM220-250-1
Dimensions (H x W x D) (∅ x H)	See above drawing
Weight	9.3 kg
Mounting diameter	L140 max profile ∅ 30…115 mm pipe
Materials	Hot dip galvanized steel
Versions	-
Options	-

Aerial Oy
Box 22
04401 Järvenpää
Finland
Tel. +358 9 2790 120
Fax +358 9 2910 210
http://www.aerial.fi
aerial@aerial.fi

L-PROFILE MOUNTING BRACKET AELM220-250-2

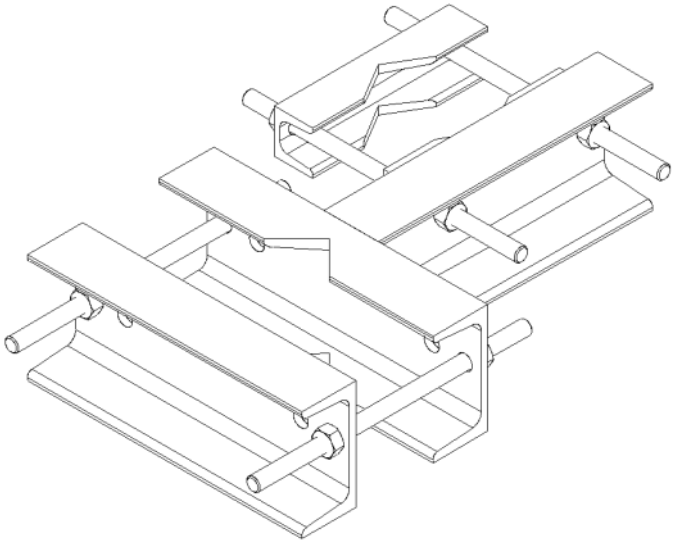

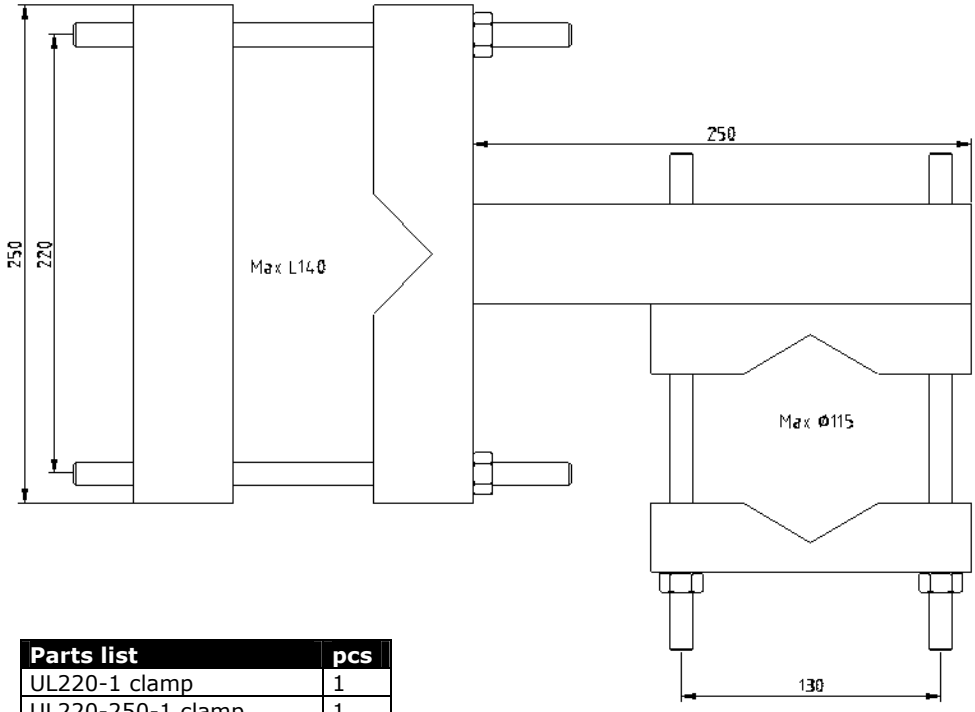

Parts list	pcs
UL220-1 clamp	1
UL220-250-1 clamp	1
U40-160 clamp	2
M12x250 headless screw	4
M12 nut	8

Type	AELM220-250-2
Dimensions (H x W x D) (∅ x H)	See above drawing
Weight	9.3 kg
Mounting diameter	L140 max profile ∅ 30…115 mm pipe
Materials	Hot dip galvanized steel
Versions	-
Options	-

Aerial Oy
Box 22
04401 Järvenpää
Finland
Tel. +358 9 2790 120
Fax +358 9 2910 210
http://www.aerial.fi
aerial@aerial.fi

L-PROFILE MOUNTING BRACKET AELM220-250-3

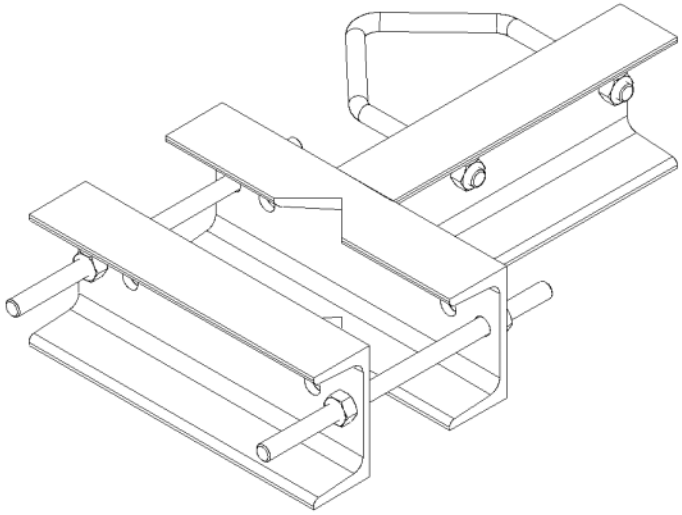

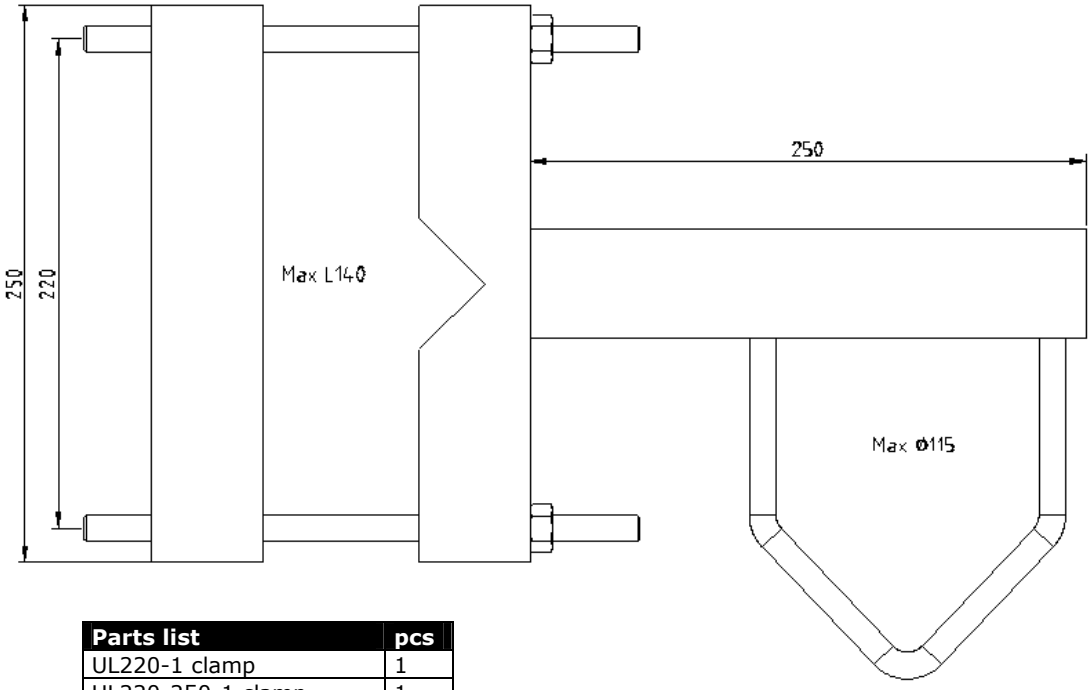

Parts list	pcs
UL220-1 clamp	1
UL220-250-1 clamp	1
VU130-1 VU-screw	1
M12x250 headless screw	2
M12 nut	6

Type	AELM220-250-3
Dimensions (H x W x D) (∅ x H)	See above drawing
Weight	9.3 kg
Mounting diameter	L140 max profile ∅ 30…115 mm pipe
Materials	Hot dip galvanized steel
Versions	-
Options	-

Aerial Oy
Box 22
04401 Järvenpää
Finland
Tel. +358 9 2790 120
Fax +358 9 2910 210
http://www.aerial.fi
aerial@aerial.fi

L-PROFILE MOUNTING BRACKET AELM220-250-4

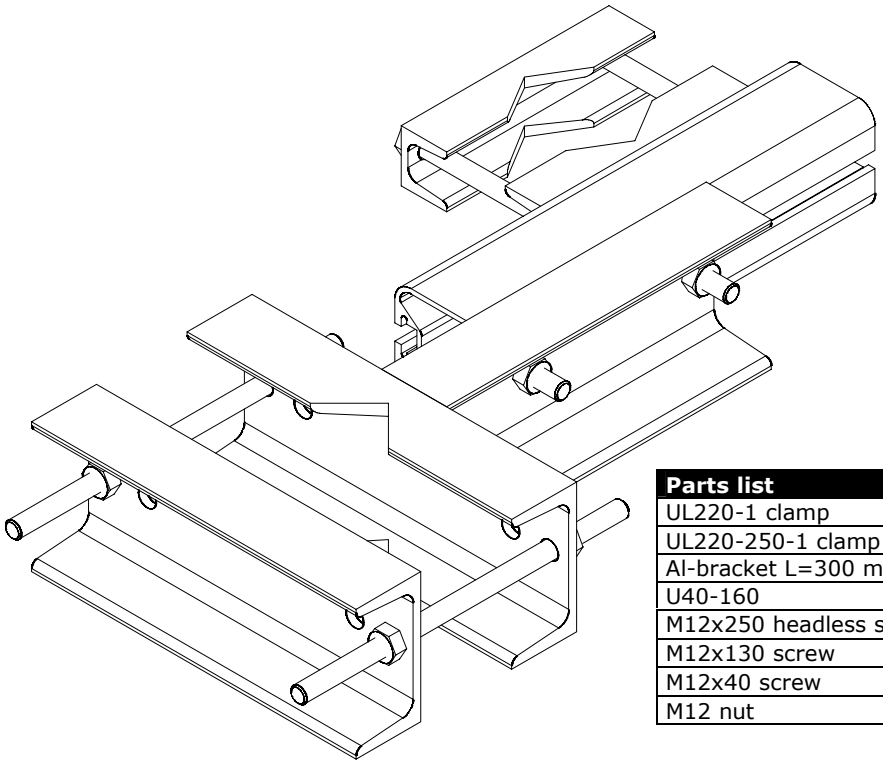

Parts list	pcs
UL220-1 clamp	1
UL220-250-1 clamp	1
Al-bracket L=300 mm	1
U40-160	2
M12x250 headless screw	2
M12x130 screw	2
M12x40 screw	2
M12 nut	8

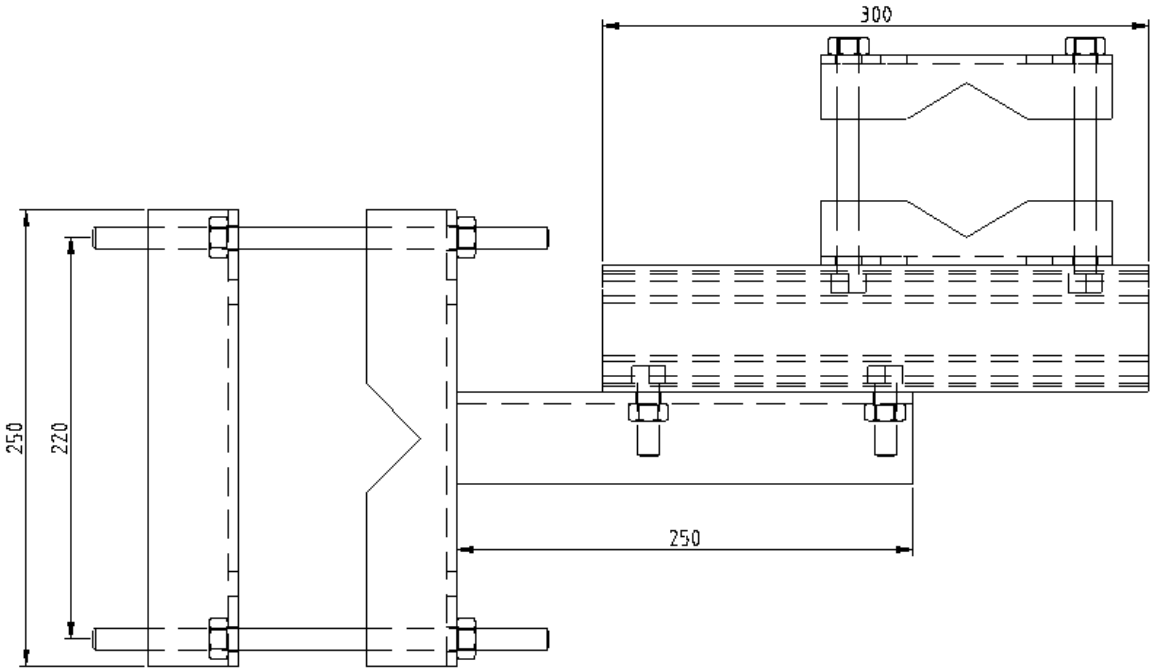

Type	AELM220-250-4
Dimensions (H x W x D) (∅ x H)	See above drawing
Weight	9,5 kg
Mounting diameter	L140 max profile ∅ 30…115 mm pipe
Materials	Hot dip galvanized steel
Versions	-
Options	-

Aerial Oy
Box 22
04401 Järvenpää
Finland
Tel. +358 9 2790 120
Fax +358 9 2910 210
http://www.aerial.fi
aerial@aerial.fi

M440/55-MAST LEG MOUNTING SET AEMK440-120-1

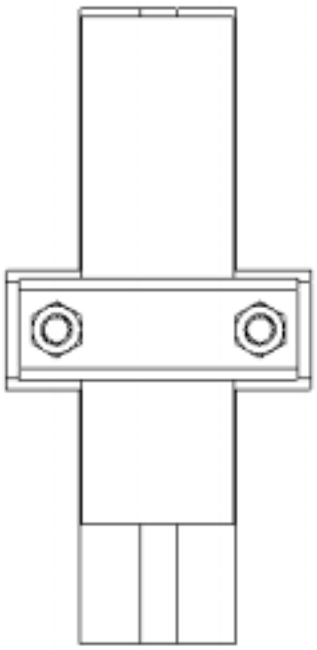

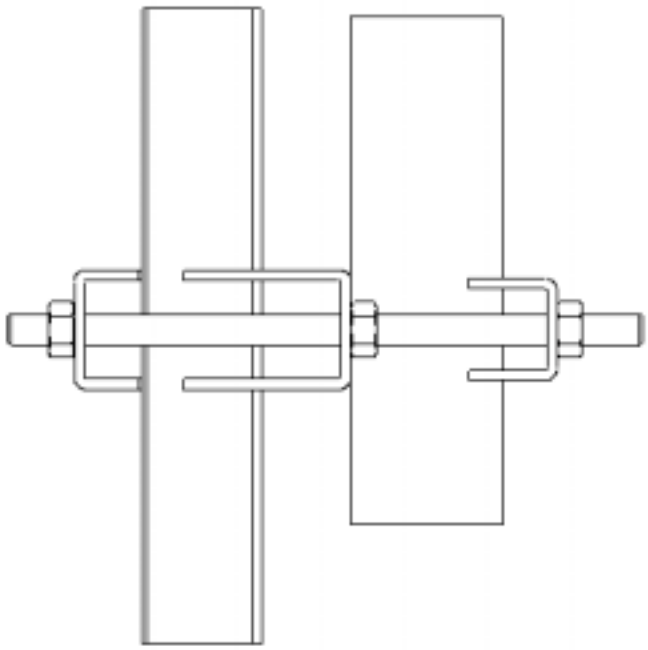

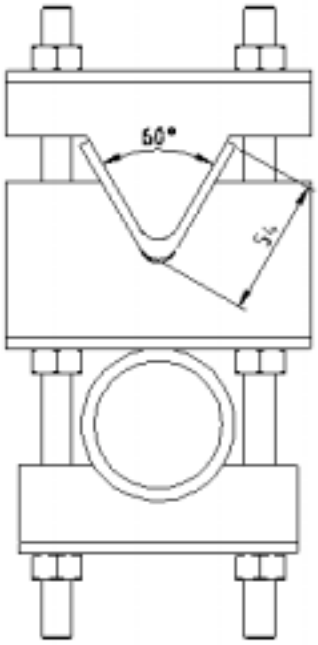

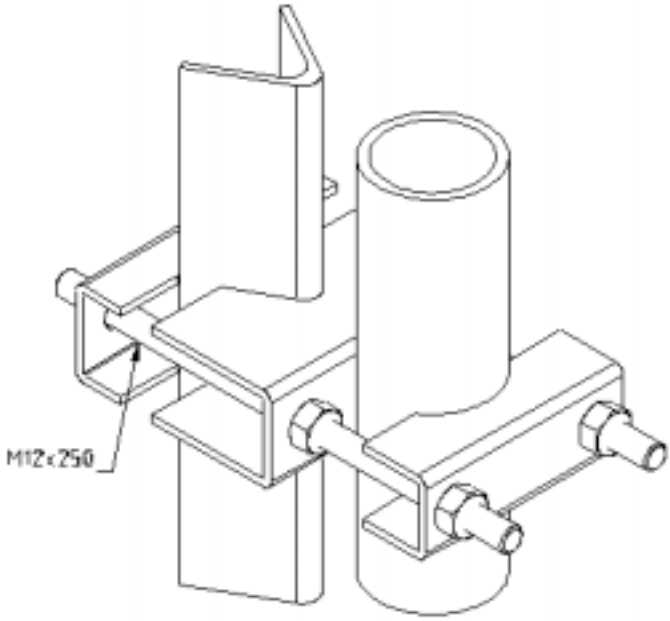

Type	AEMK440-120-1
Dimensions (H x W x D) (∅ x H)	See above drawing
Weight	1.8 kg
Mounting diameter	60mm pipe
Materials	Hot dip galvanized steel
Versions	-
Options	-

Aerial Oy
Box 22
04401 Järvenpää
Finland
Tel. +358 9 2790 120
Fax +358 9 2910 210
http://www.aerial.fi
aerial@aerial.fi

M440/55-MAST LEG SIDE MOUNTING SET AEMK440-270-1

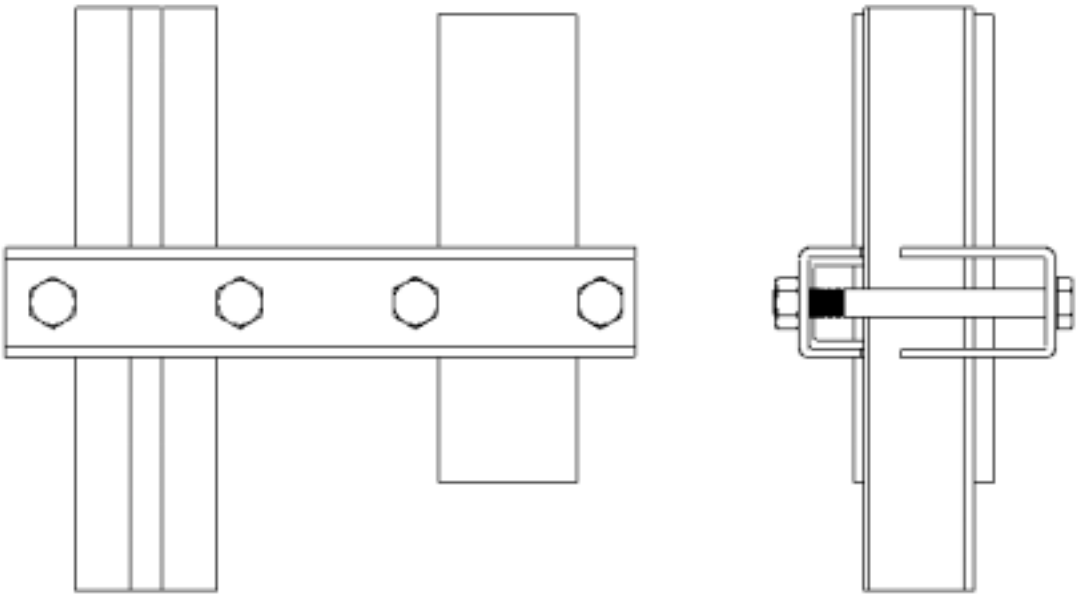

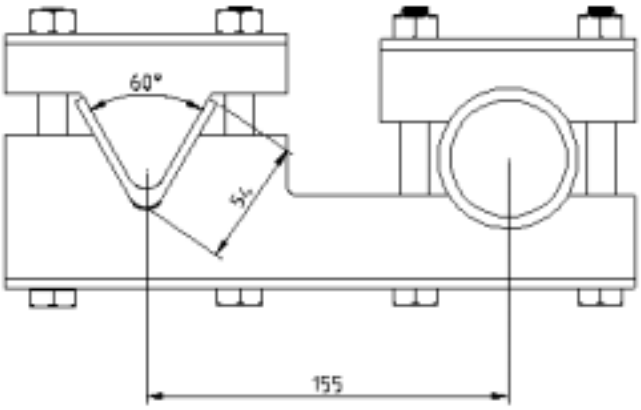

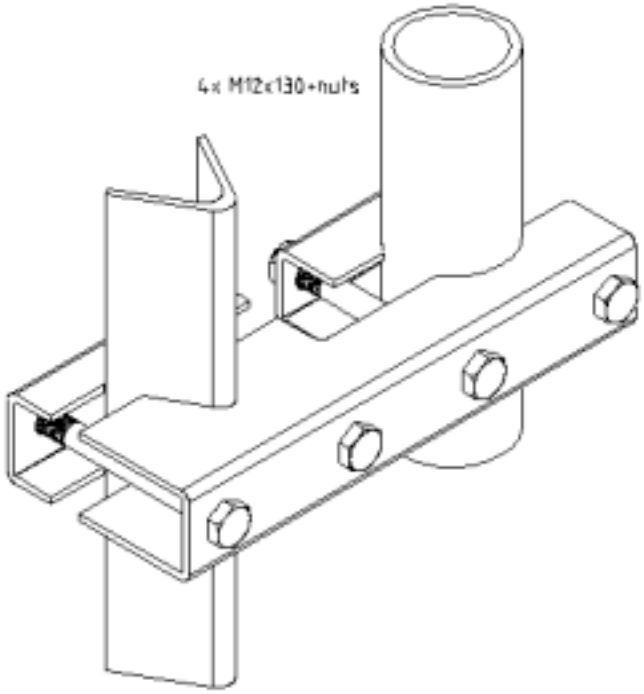

Type	AEMK440-270-1
Dimensions (H x W x D) (∅ x H)	See above drawing
Weight	2.3 kg
Mounting diameter	60mm pipe
Materials	Hot dip galvanized steel
Versions	-
Options	-

Aerial Oy
Box 22
04401 Järvenpää
Finland
Tel. +358 9 2790 120
Fax +358 9 2910 210
http://www.aerial.fi
aerial@aerial.fi

ADJUSTABLE WALL MOUNTING SET AEWMAXXX-115-1

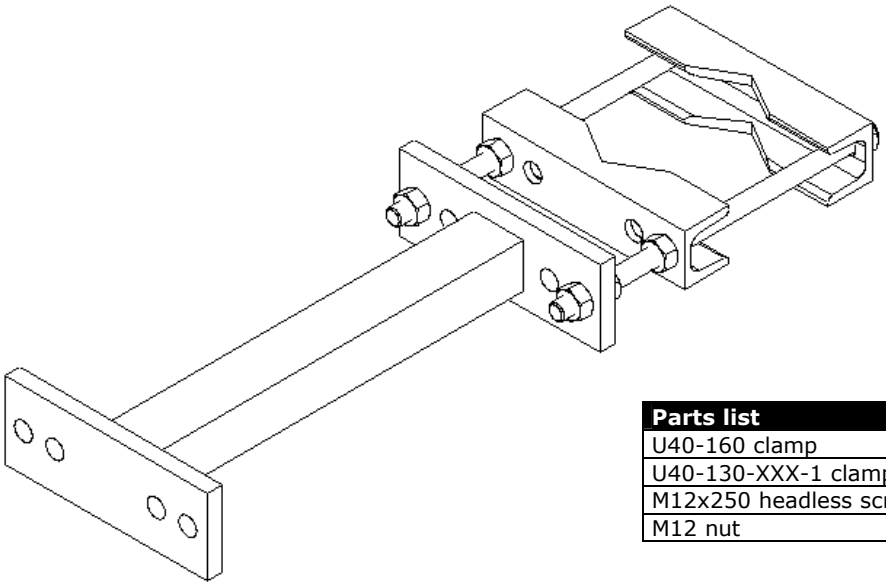

Parts list	pcs
U40-160 clamp	2
U40-130-XXX-1 clamp	1
M12x250 headless screw	2
M12 nut	8

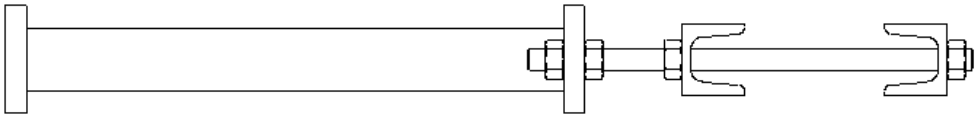

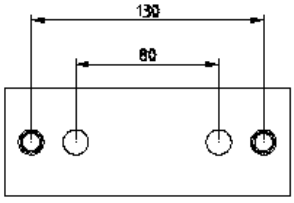

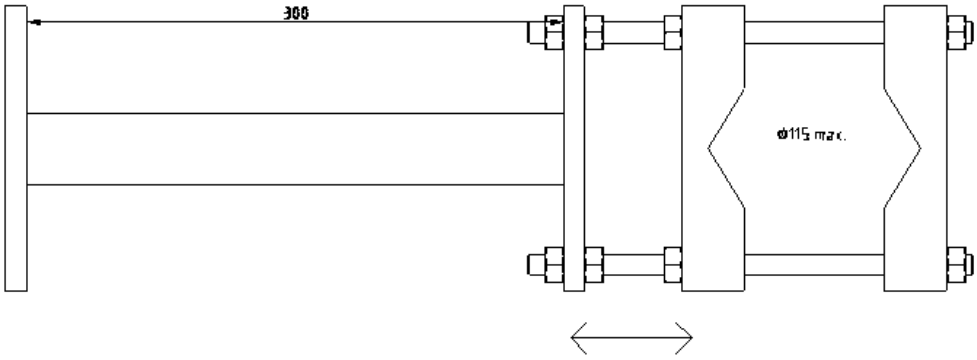

Type	AEWMAXXX-115-1
Dimensions (H x W x D) (∅ x H)	See above drawing XXX=bracket length (300 in picture)
Weight	5.1 kg
Mounting diameter	30...115mm pipe
Materials	Hot dip galvanized steel
Versions	-
Options	-Bracket length (100,300,500mm in stock)

Aerial Oy
Box 22
04401 Järvenpää
Finland
Tel. +358 9 2790 120
Fax +358 9 2910 210
http://www.aerial.fi
aerial@aerial.fi

WALL MOUNTING SET AEWMXXX-115-1

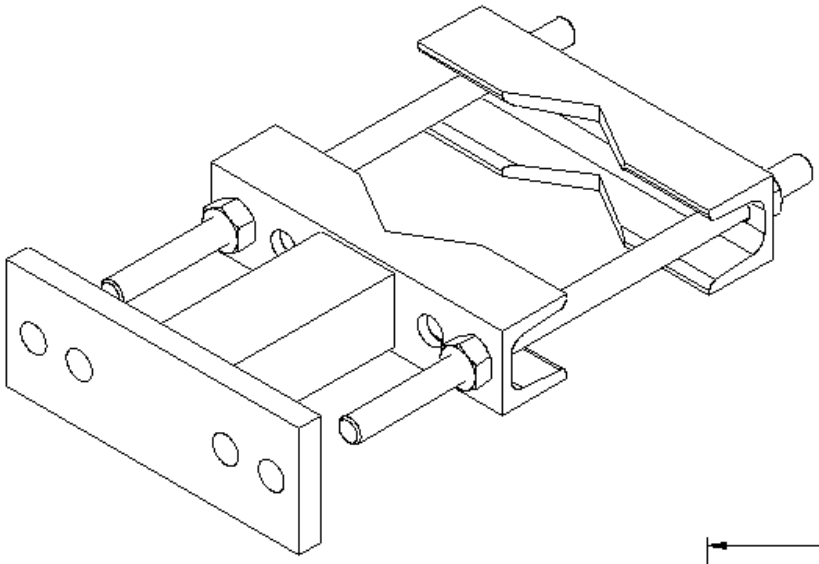

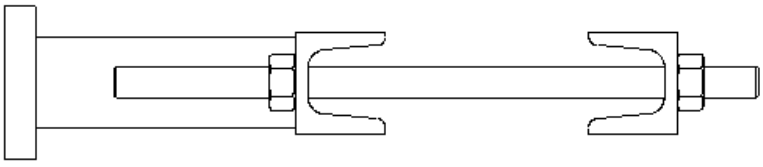

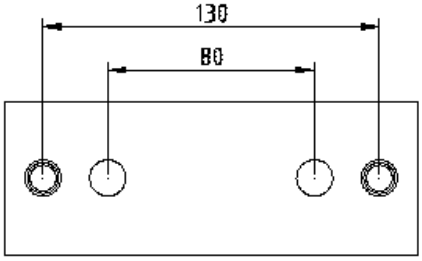

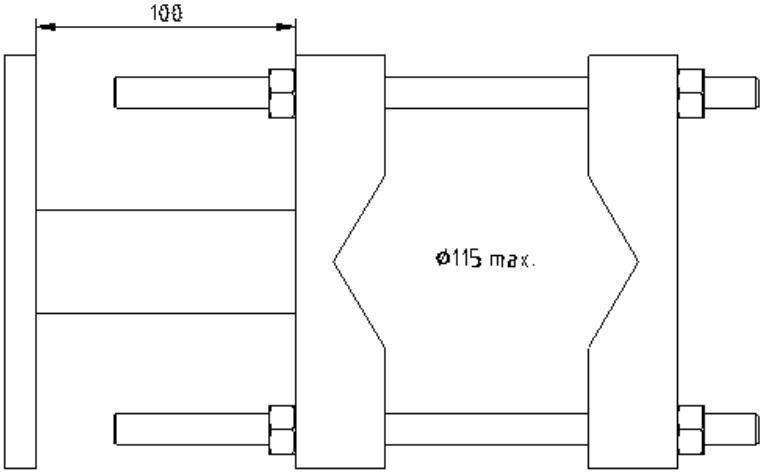

Parts list	pcs
U40-160 clamp	1
U40-XXX-115-1 clamp	1
M12x250 headless screw	2
M12 nut	4

Type	AEWMXXX-115-1
Dimensions (H x W x D) (∅ x H)	See above drawing XXX=bracket length (100 in picture)
Weight	3.2 kg
Mounting diameter	See above drawing
Materials	Hot dip galvanized steel
Versions	-
Options	-Bracket length (XXX) (100,300,500mm in stock)

Aerial Oy
Box 22
04401 Järvenpää
Finland
Tel. +358 9 2790 120
Fax +358 9 2910 210
http://www.aerial.fi
aerial@aerial.fi

WALL MOUNTING SET AEWMXXX-115-2

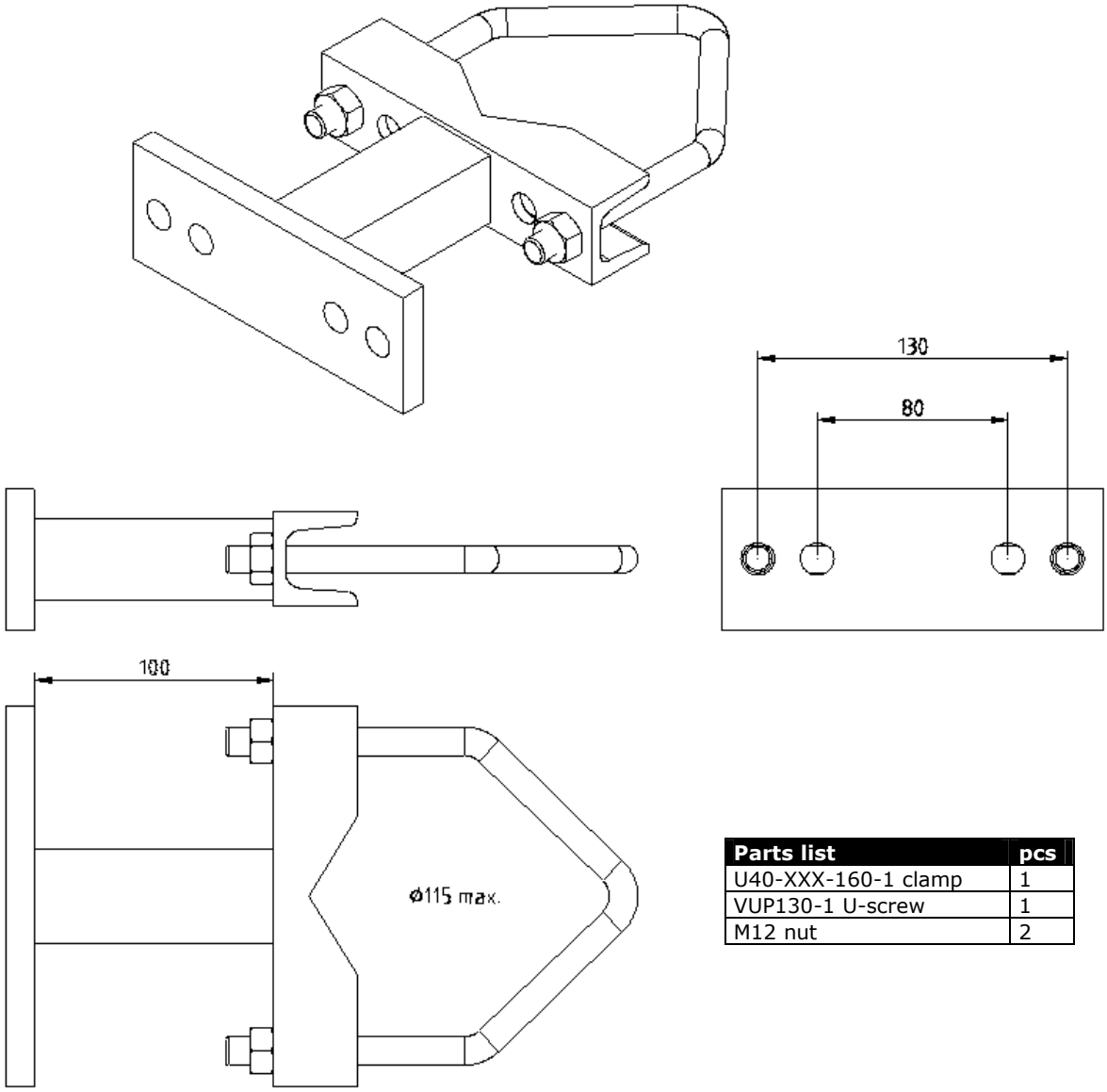

Parts list	pcs
U40-XXX-160-1 clamp	1
VUP130-1 U-screw	1
M12 nut	2

Type	AEWMXXX-115-2
Dimensions (H x W x D) (∅ x H)	See above drawing XXX=bracket length (100 in picture)
Weight	3.2 kg
Mounting diameter	See above drawing
Materials	Hot dip galvanized steel
Versions	-
Options	-Bracket length (XXX) (100,300,500mm in stock)

Aerial Oy
Box 22
04401 Järvenpää
Finland
Tel. +358 9 2790 120
Fax +358 9 2910 210
http://www.aerial.fi
aerial@aerial.fi

WALL MOUNTING SET AEWM200-750-1

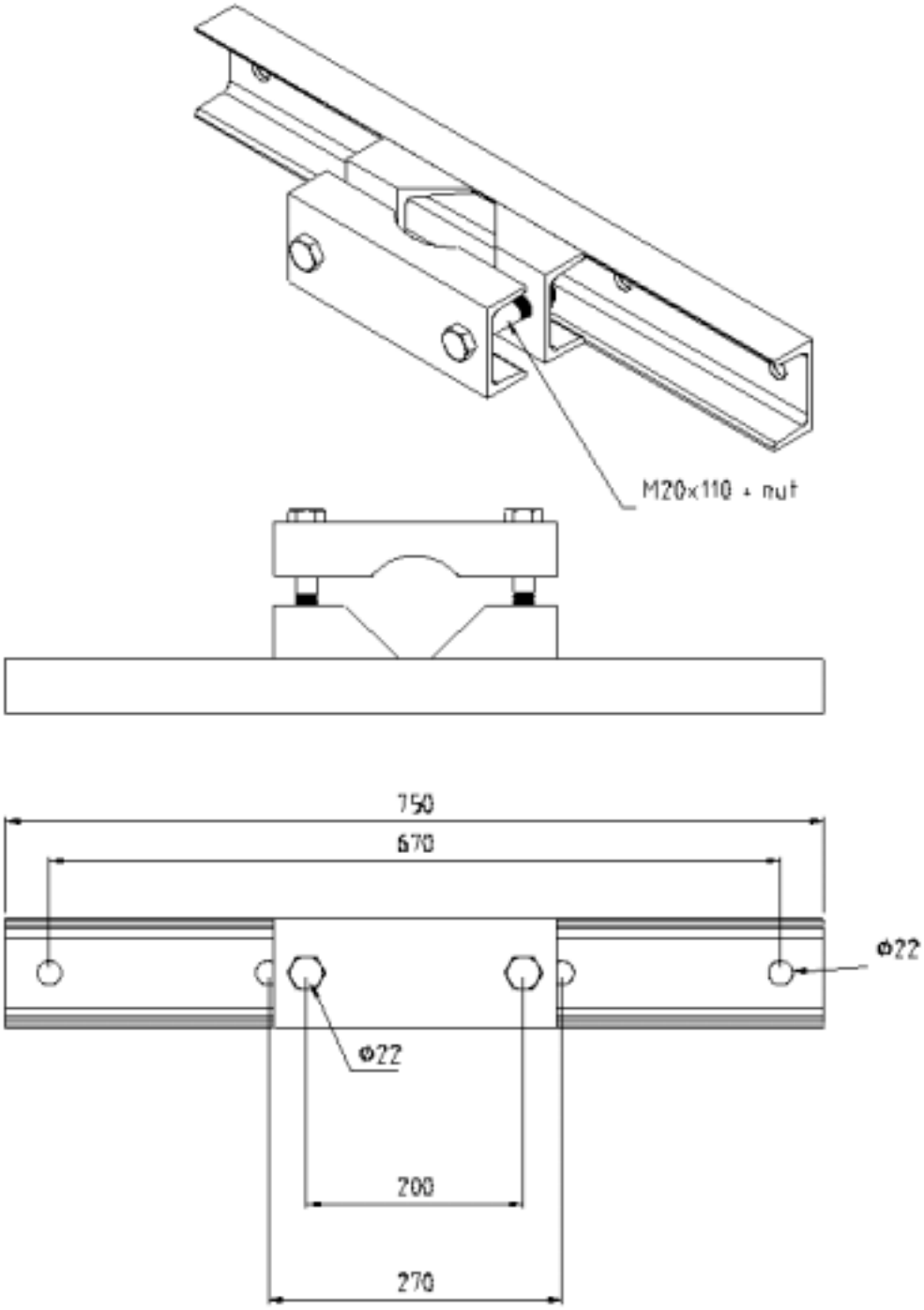

Type	AEWM200-750-1
Dimensions (H x W x D) (∅ x H)	See above drawing
Weight	12.9 kg
Mounting diameter	90mm pipe
Materials	Hot dip galvanized steel
Versions	-
Options	-

Aerial Oy
Box 22
04401 Järvenpää
Finland
Tel. +358 9 2790 120
Fax +358 9 2910 210
http://www.aerial.fi
aerial@aerial.fi

WALL MOUNTING PLATE AMWP250-250-1

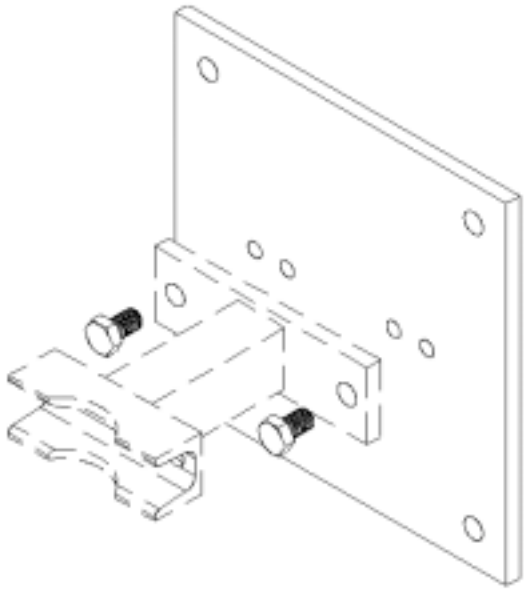

Bracket in the picture not included

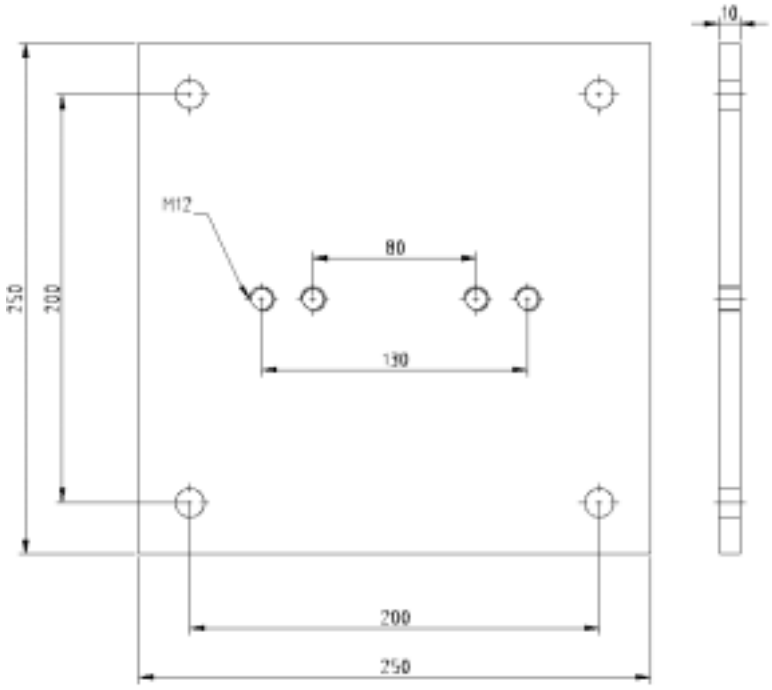

Type	AMWP250-250-1
Dimensions (H x W x D) (∅ x H)	See dimensions drawing
Weight	5 kg
Materials	Hot dip galvanized steel
Versions	-
Options	-

Aerial Oy
Box 22
04401 Järvenpää
Finland
Tel. +358 9 2790 120
Fax +358 9 2910 210
http://www.aerial.fi
aerial@aerial.fi

MOUNTING CLAMP U40-110

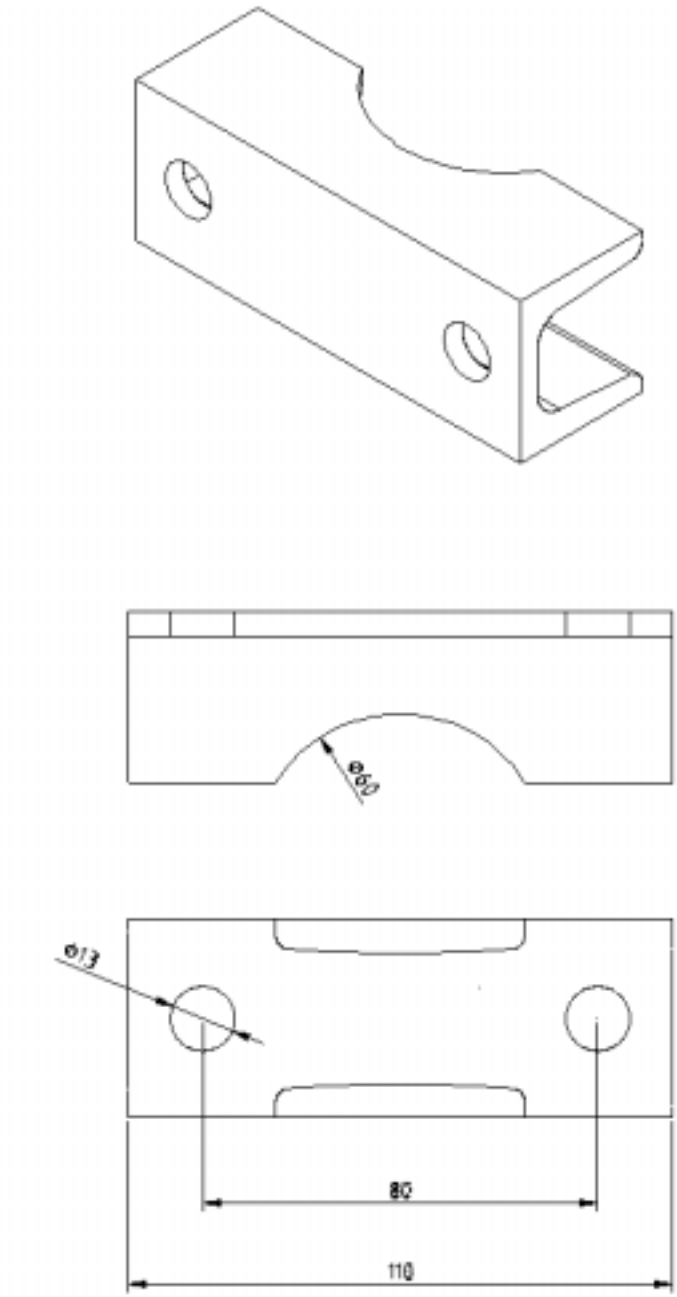

Type	U40-110
Dimensions (H x W x D) (∅ x H)	See above drawing
Weight	0.5 kg
Materials	Hot dip galvanized steel
Versions	-
Options	-

Aerial Oy
Box 22
04401 Järvenpää
Finland
Tel. +358 9 2790 120
Fax +358 9 2910 210
http://www.aerial.fi
aerial@aerial.fi

MOUNTING CLAMP U40-110-76

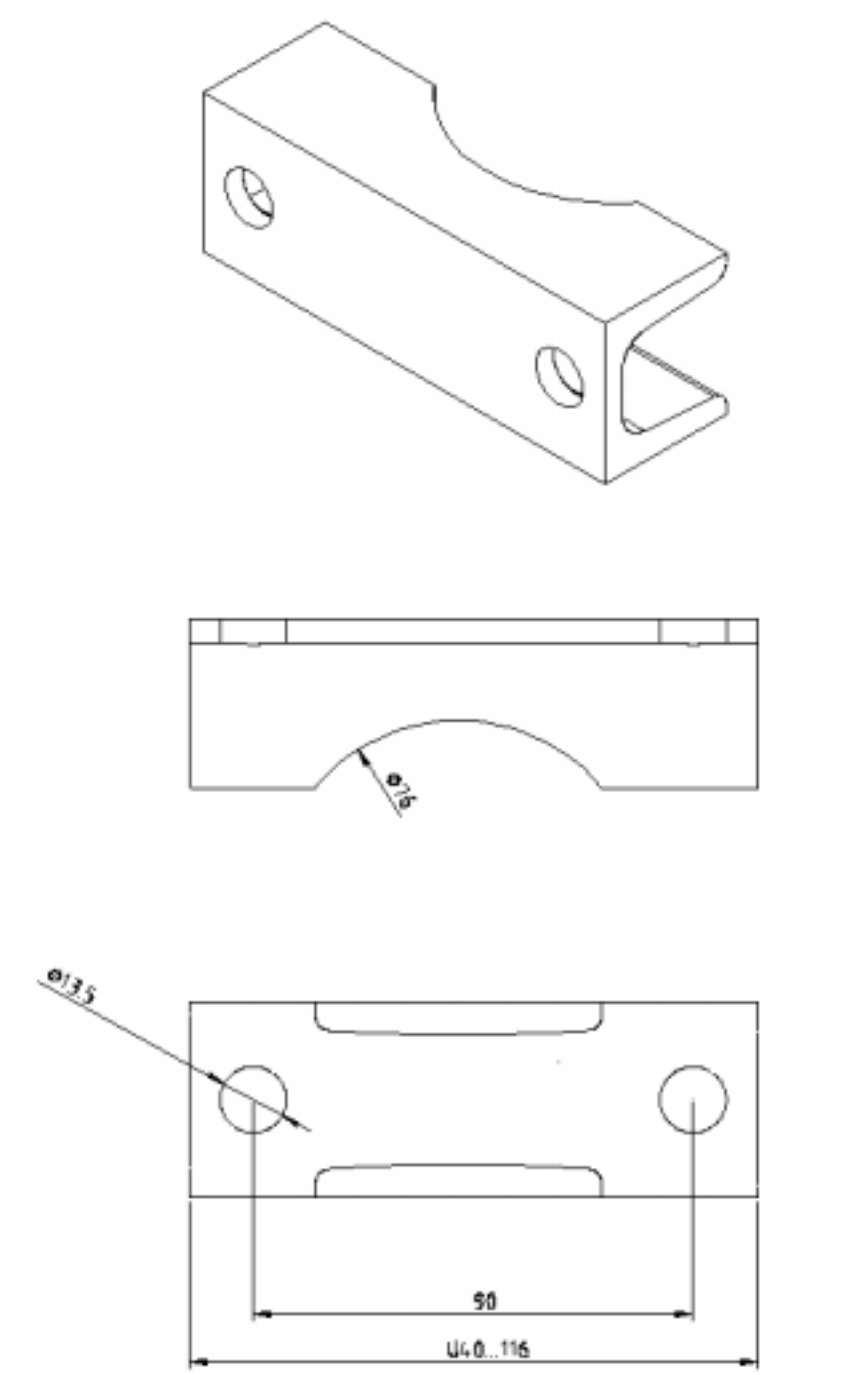

Type	U40-110-76
Dimensions (H x W x D) (∅ x H)	See above drawing
Weight	0.5 kg
Materials	Hot dip galvanized steel
Versions	-
Options	-

Aerial Oy
Box 22
04401 Järvenpää
Finland
Tel. +358 9 2790 120
Fax +358 9 2910 210
http://www.aerial.fi
aerial@aerial.fi

MOUNTING CLAMP U40-160

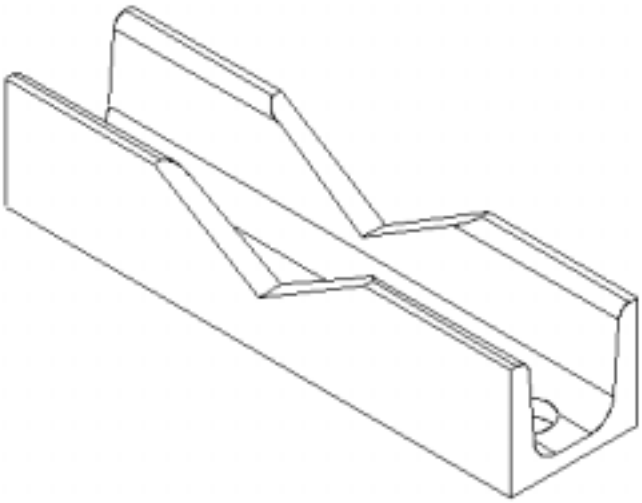

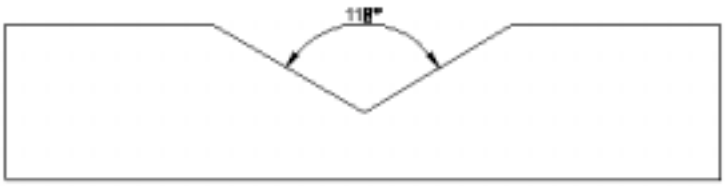

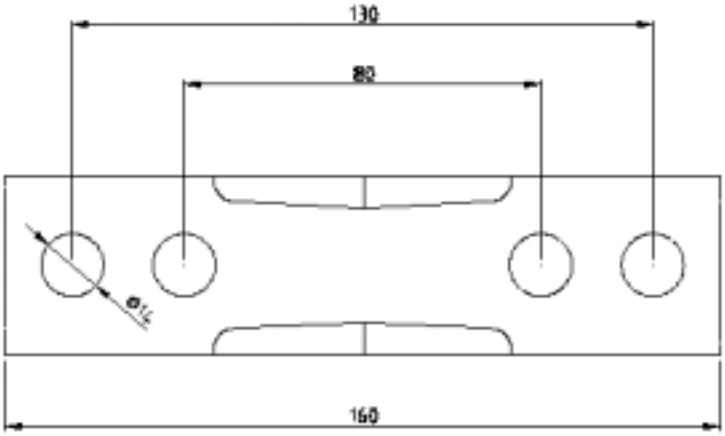

Type	U40-160
Dimensions (H x W x D) (∅ x H)	See above drawing
Weight	0.75 kg
Materials	Hot dip galvanized steel
Versions	-
Options	-

Aerial Oy
Box 22
04401 Järvenpää
Finland
Tel. +358 9 2790 120
Fax +358 9 2910 210
http://www.aerial.fi
aerial@aerial.fi

MOUNTING CLAMP U40-160L

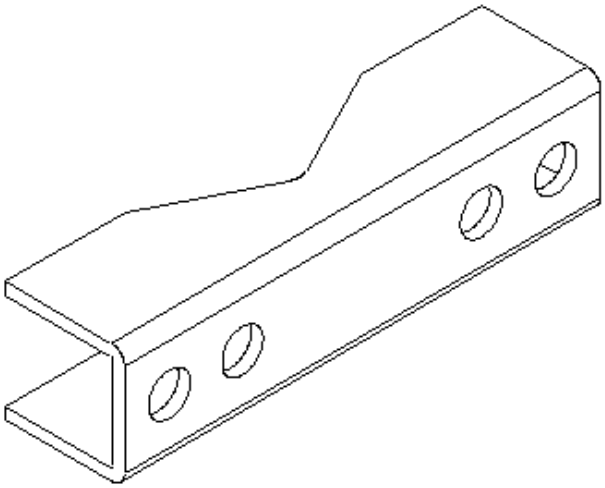

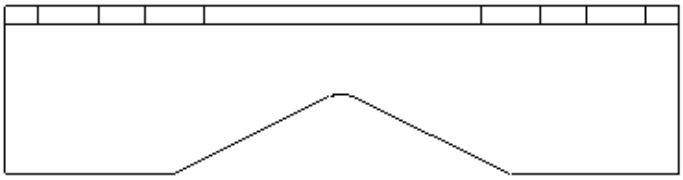

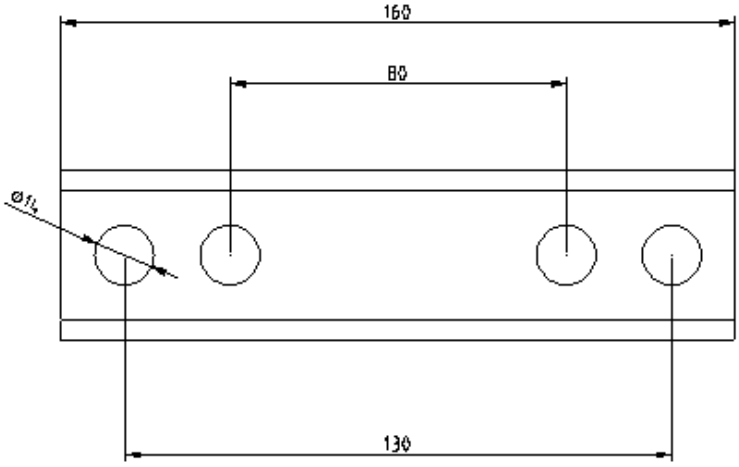

Type	U40-160L (plate version)
Dimensions (H x W x D) (∅ x H)	See above drawing
Weight	0.4 kg
Materials	Hot dip galvanized steel
Versions	-
Options	-

Aerial Oy
Box 22
04401 Järvenpää
Finland
Tel. +358 9 2790 120
Fax +358 9 2910 210
http://www.aerial.fi
aerial@aerial.fi

MOUNTING CLAMP AML160-1

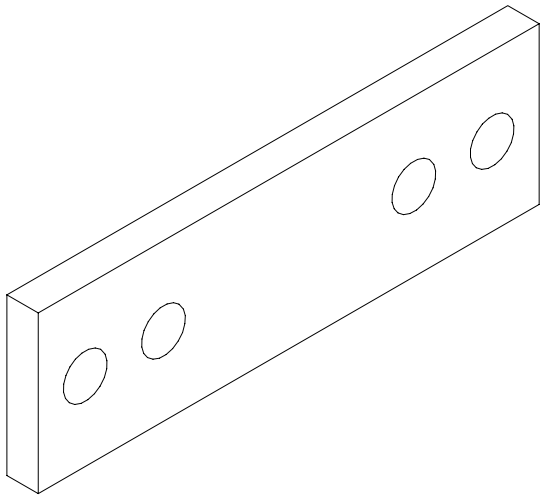

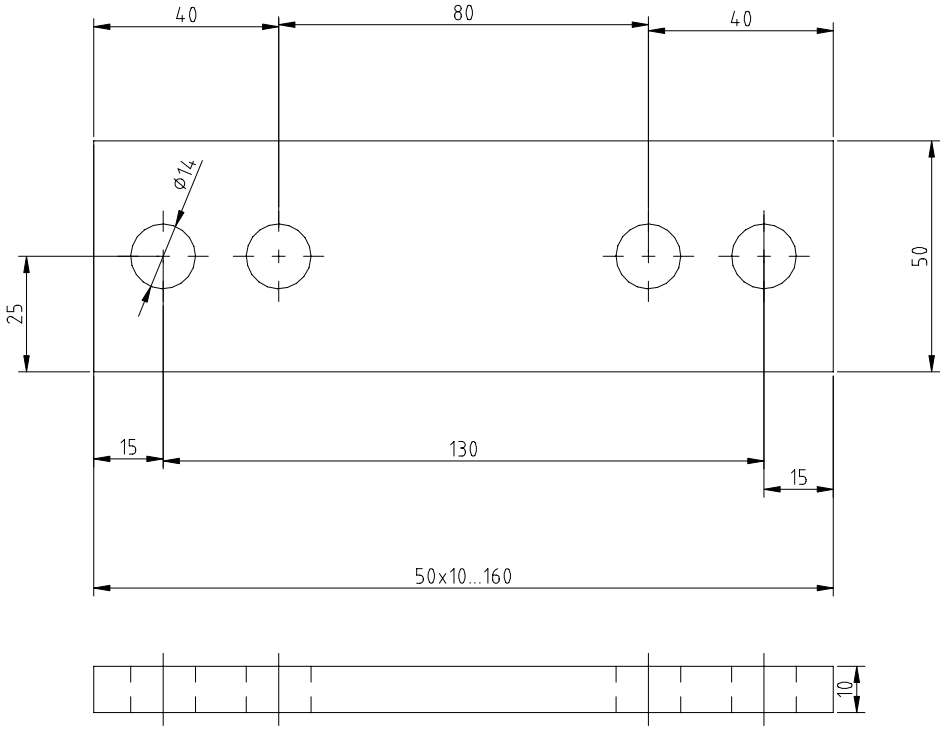

Type	AML160-1
Dimensions (H x W x D) (∅ x H)	See dimensions drawing
Weight	0,65 kg
Mounting diameter	∅ 30...115 mm pipe
Materials	Hot dip galvanized steel
Versions	-
Options	-

Aerial Oy
Box 22
04401 Järvenpää
Finland
Tel. +358 9 2790 120
Fax +358 9 2910 210
http://www.aerial.fi
aerial@aerial.fi

MOUNTING CLAMP U40-160X

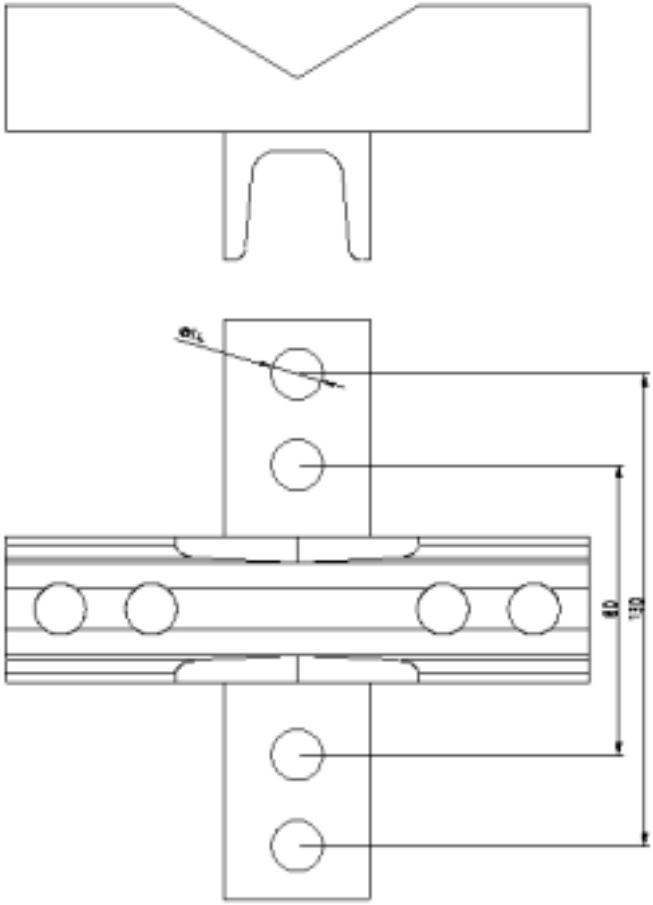

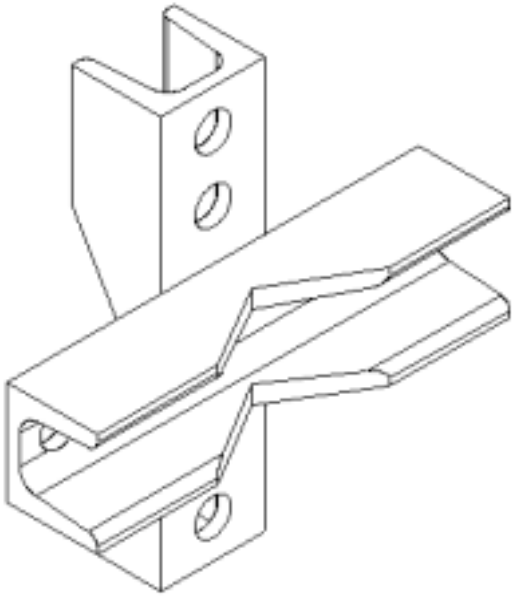

Type	U40-160X
Dimensions (H x W x D) (∅ x H)	See above drawing
Weight	1.5kg
Materials	Hot dip galvanized steel
Versions	-
Options	-

Aerial Oy
Box 22
04401 Järvenpää
Finland
Tel. +358 9 2790 120
Fax +358 9 2910 210
http://www.aerial.fi
aerial@aerial.fi

MOUNTING CLAMP U40-160T

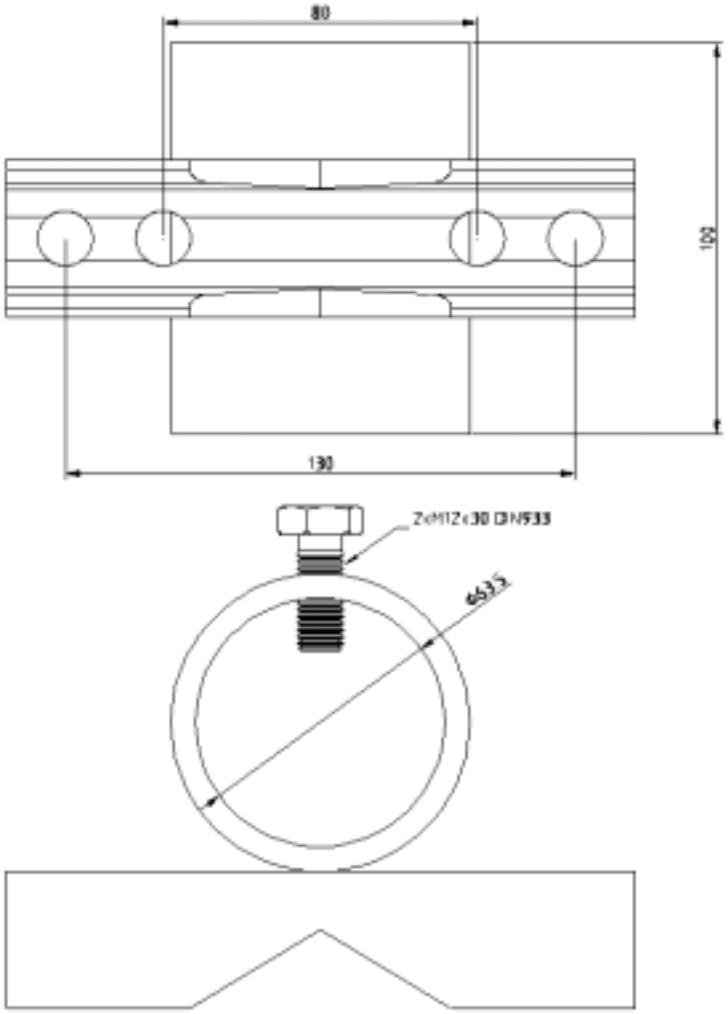

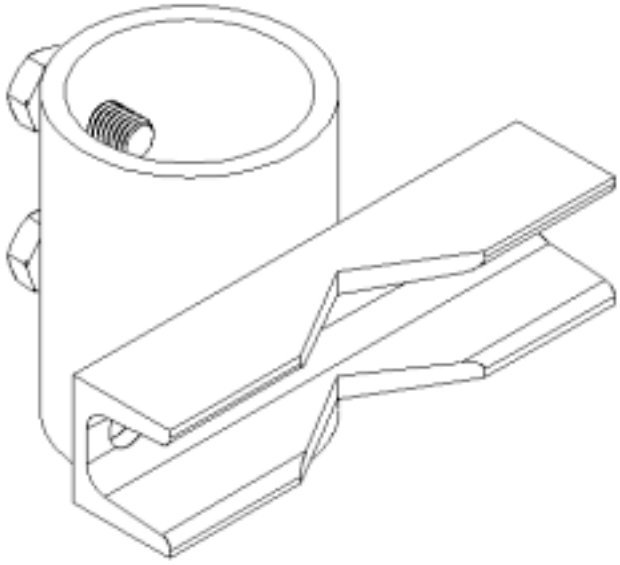

Type	U40-160T
Dimensions (H x W x D) (∅ x H)	See above drawing
Weight	1.3 kg
Materials	Hot dip galvanized steel
Versions	-
Options	-

Aerial Oy
Box 22
04401 Järvenpää
Finland
Tel. +358 9 2790 120
Fax +358 9 2910 210
http://www.aerial.fi
aerial@aerial.fi

MOUNTING CLAMP Z160-1

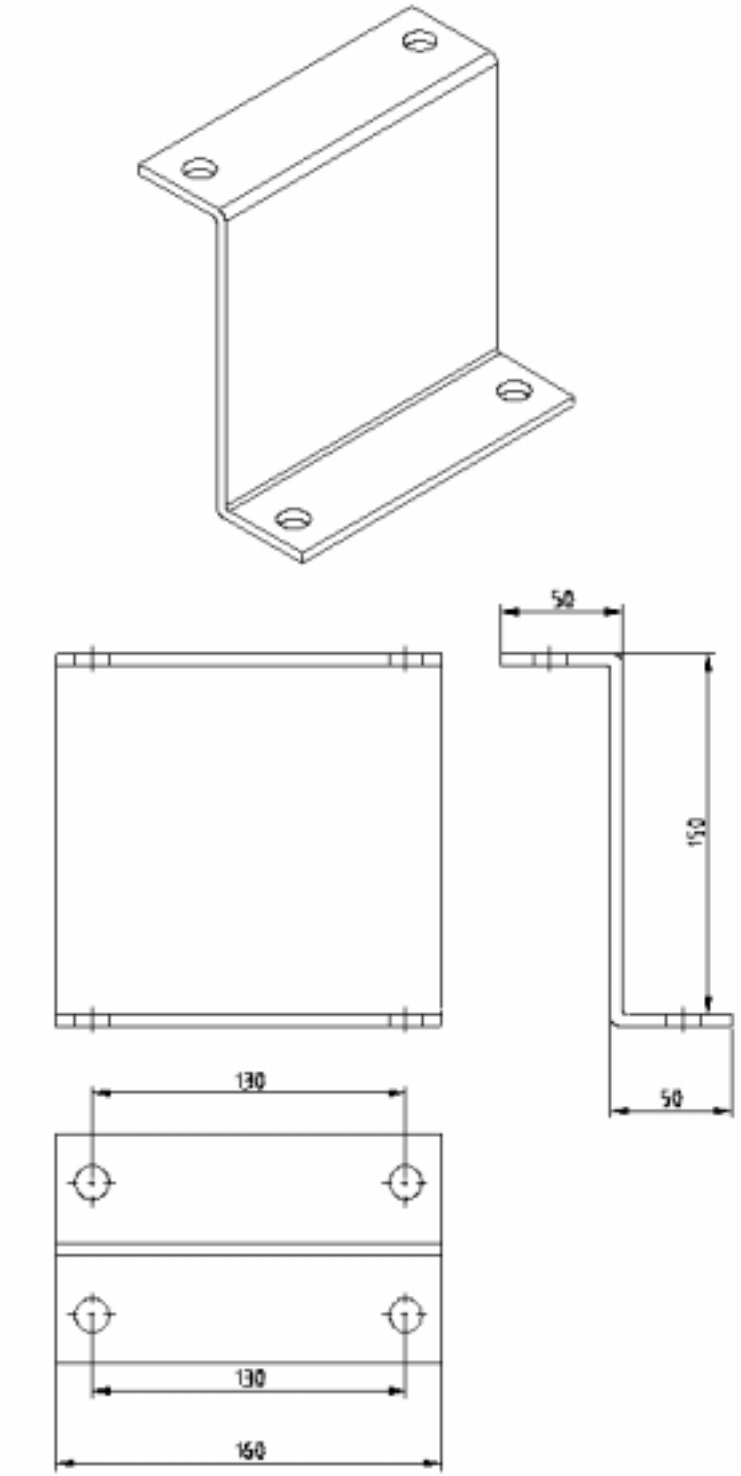

Type	Z160-1
Dimensions (H x W x D) (∅ x H)	See above drawing
Weight	0.5kg
Materials	Hot dip galvanized steel
Versions	-
Options	-

Aerial Oy
Box 22
04401 Järvenpää
Finland
Tel. +358 9 2790 120
Fax +358 9 2910 210
http://www.aerial.fi
aerial@aerial.fi

MOUNTING CLAMP U50-300-1

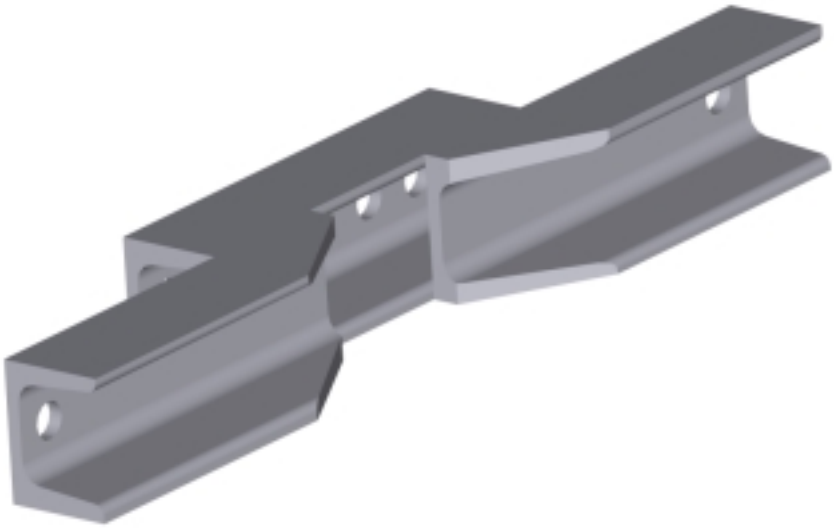

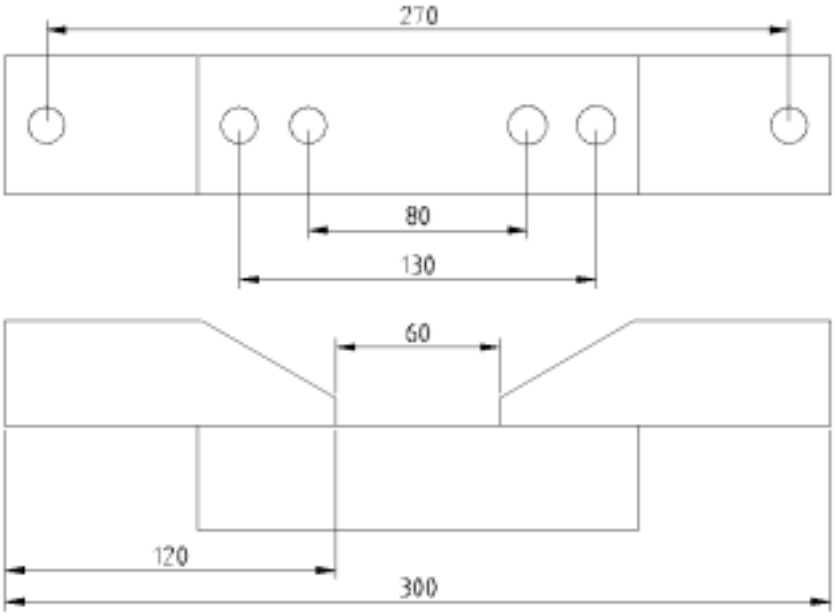

Type	U50-300-1
Dimensions (H x W x D) (∅ x H)	See dimensions drawing
Weight	2,5 kg
Mounting diameter	∅ 115-258 mm pipe
Materials	Hot dip galvanized steel
Versions	-
Options	-

Aerial Oy
Box 22
04401 Järvenpää
Finland
Tel. +358 9 2790 120
Fax +358 9 2910 210
http://www.aerial.fi
aerial@aerial.fi

MOUNTING CLAMP U50-380-1

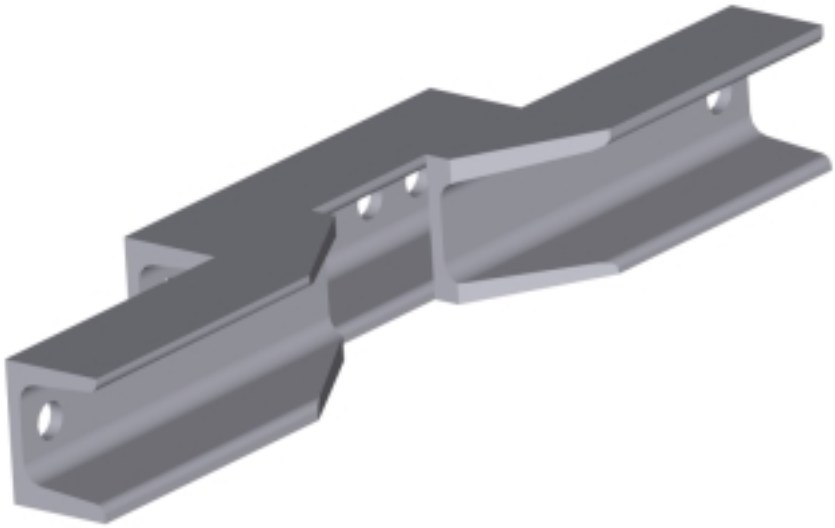

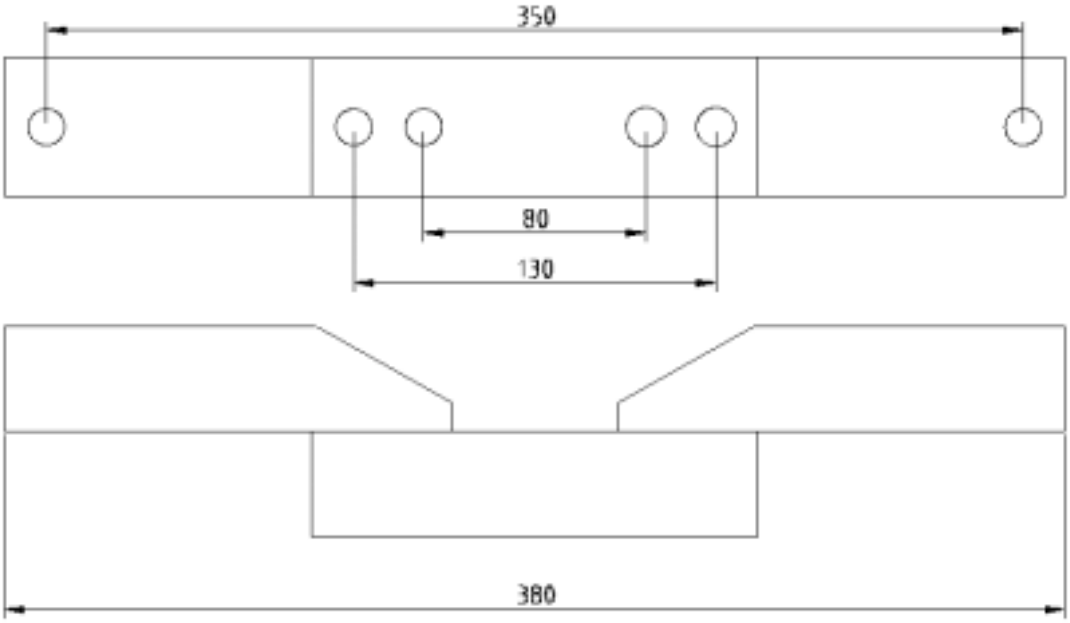

Type	U50-380-1
Dimensions (H x W x D) (∅ x H)	See dimensions drawing
Weight	2,5 kg
Mounting diameter	∅ 115-330 mm pipe
Materials	Hot dip galvanized steel
Versions	-
Options	-

Aerial Oy
Box 22
04401 Järvenpää
Finland
Tel. +358 9 2790 120
Fax +358 9 2910 210
http://www.aerial.fi
aerial@aerial.fi

MOUNTING CLAMP U100-160

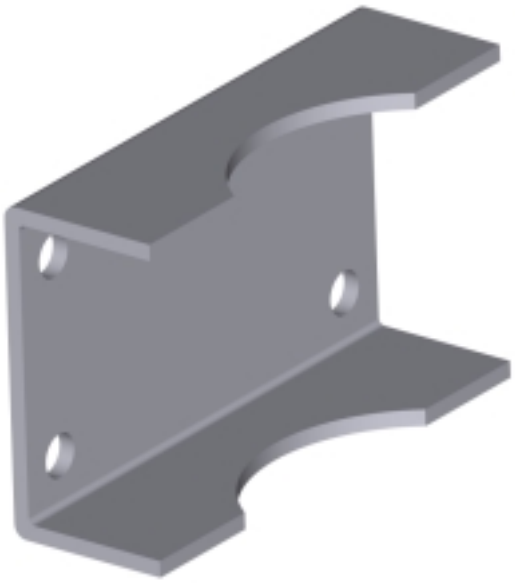

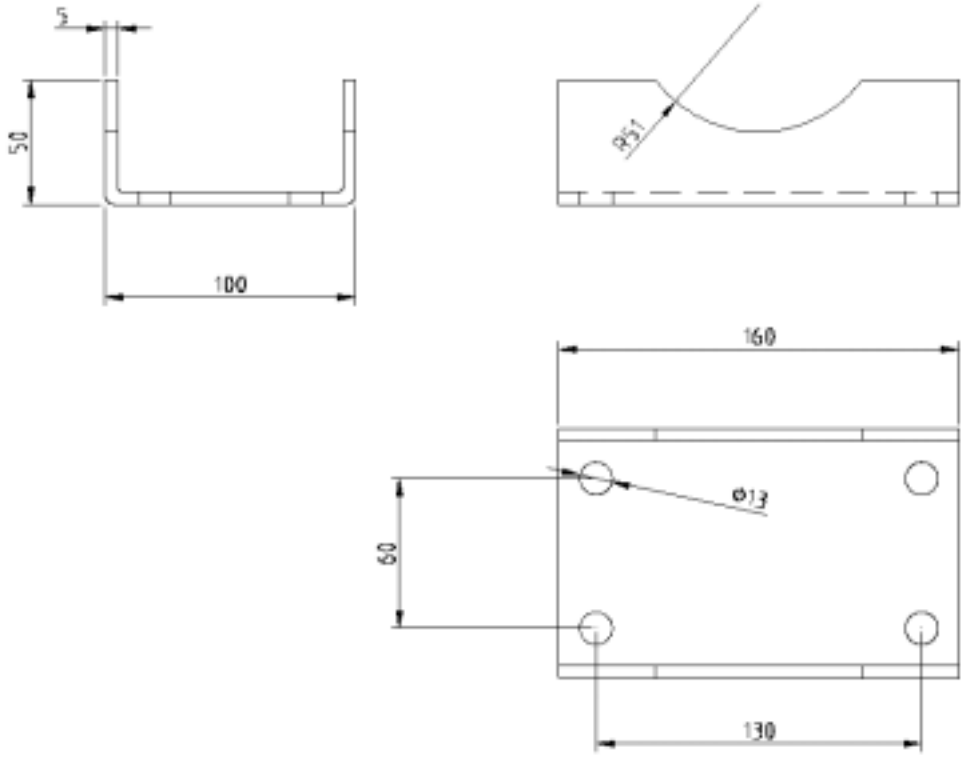

Type	U100-160
Dimensions (H x W x D) (∅ x H)	See dimensions drawing
Weight	1 kg
Mounting diameter	∅ 100 mm pipe
Materials	Hot dip galvanized steel
Versions	-
Options	-

Aerial Oy
Box 22
04401 Järvenpää
Finland
Tel. +358 9 2790 120
Fax +358 9 2910 210
http://www.aerial.fi
aerial@aerial.fi

MOUNTING CLAMP U100-220

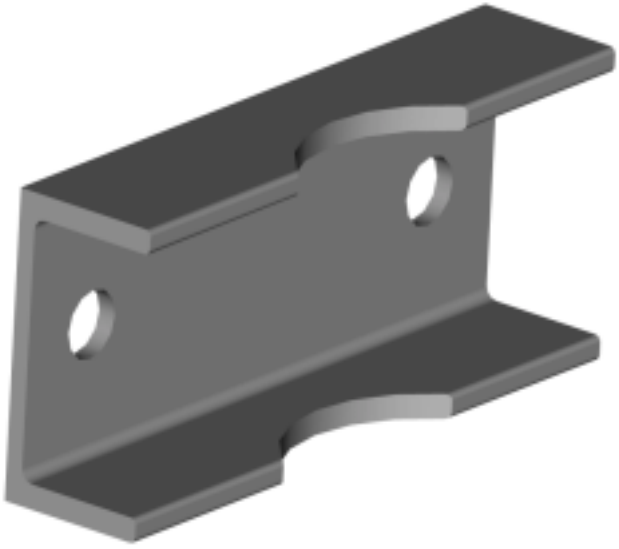

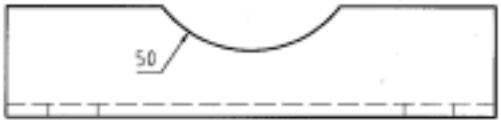

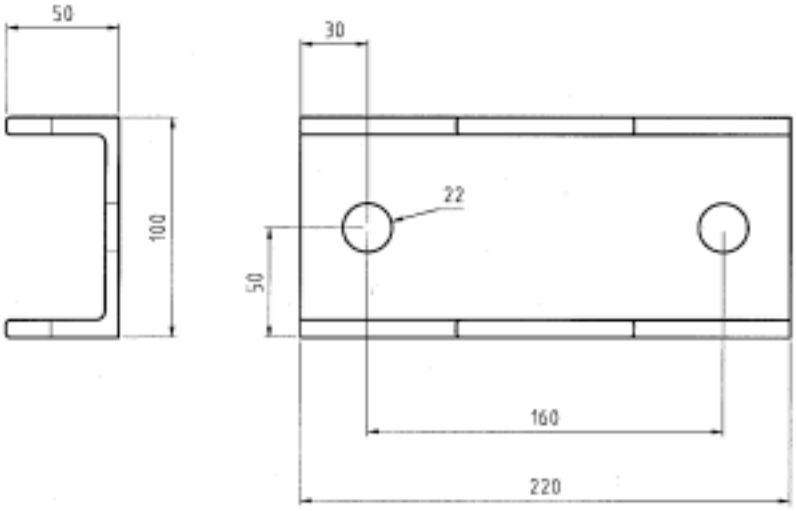

Type	U100-220
Dimensions (H x W x D) (∅ x H)	See dimensions drawing
Weight	2,1 kg
Mounting diameter	∅ 100 mm pipe
Materials	Hot dip galvanized steel
Versions	-
Options	-

Aerial Oy
Box 22
04401 Järvenpää
Finland
Tel. +358 9 2790 120
Fax +358 9 2910 210
http://www.aerial.fi
aerial@aerial.fi

MOUNTING CLAMP U100-260

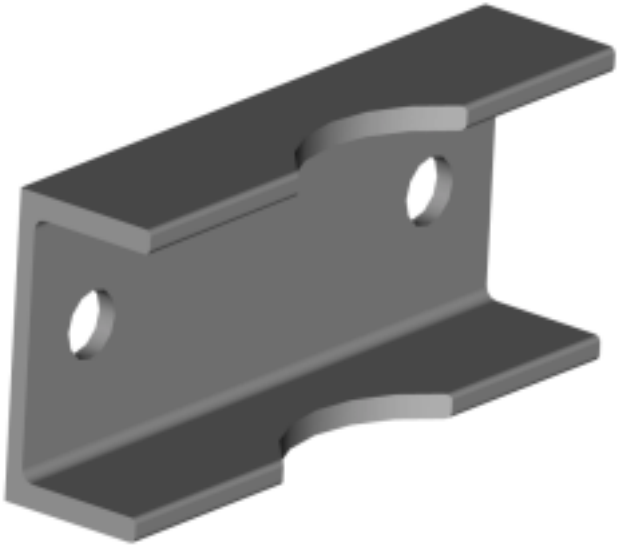

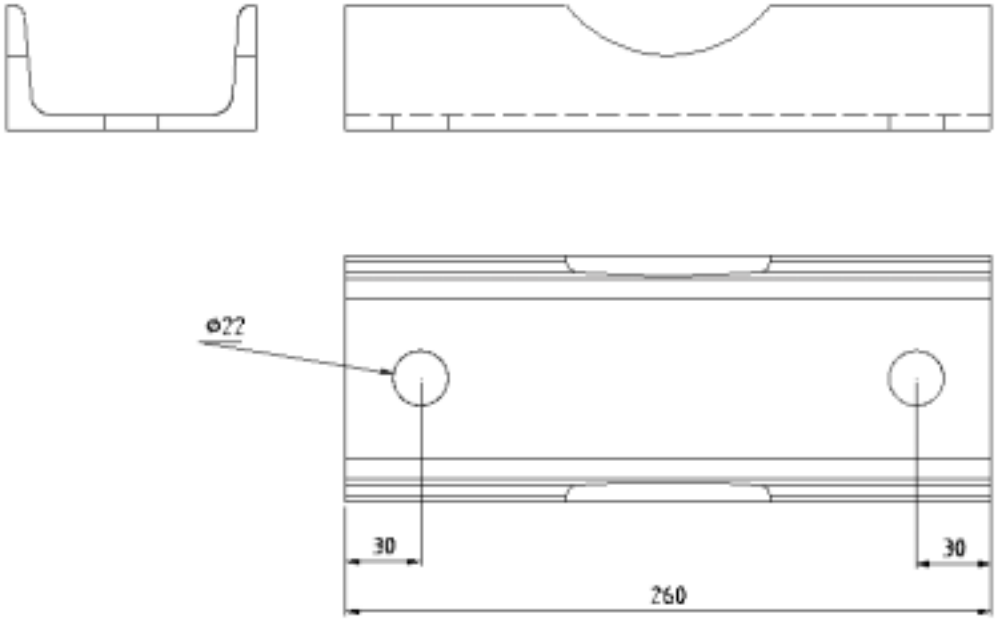

Type	U100-260
Dimensions (H x W x D) (∅ x H)	See dimensions drawing
Weight	2,3 kg
Mounting diameter	∅ 100 mm pipe
Materials	Hot dip galvanized steel
Versions	-
Options	-

Aerial Oy
Box 22
04401 Järvenpää
Finland
Tel. +358 9 2790 120
Fax +358 9 2910 210
http://www.aerial.fi
aerial@aerial.fi

MOUNTING CLAMP U40-160F

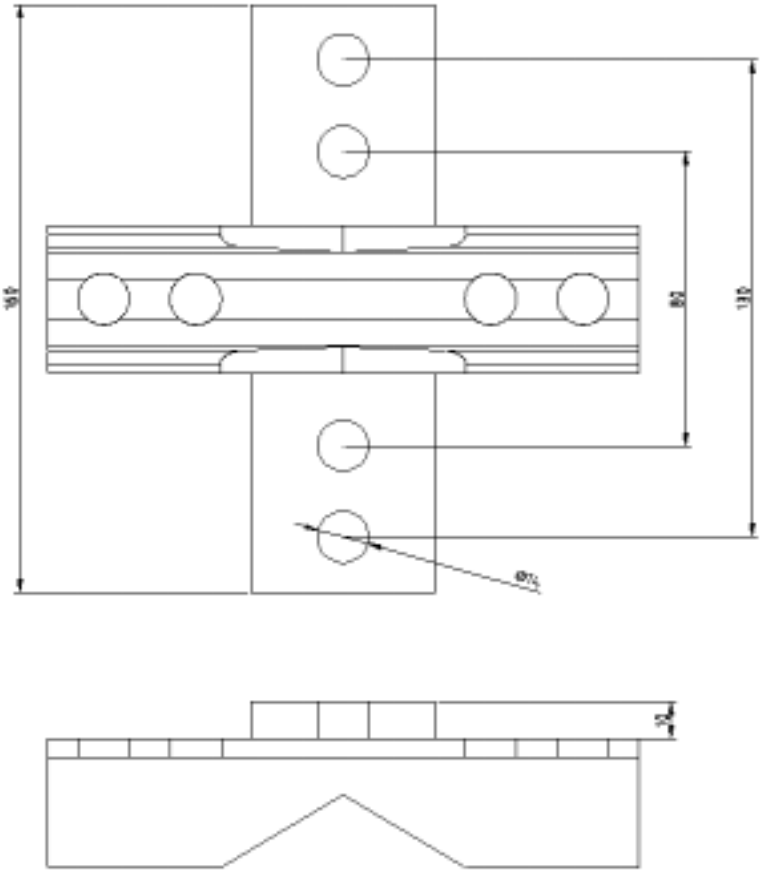

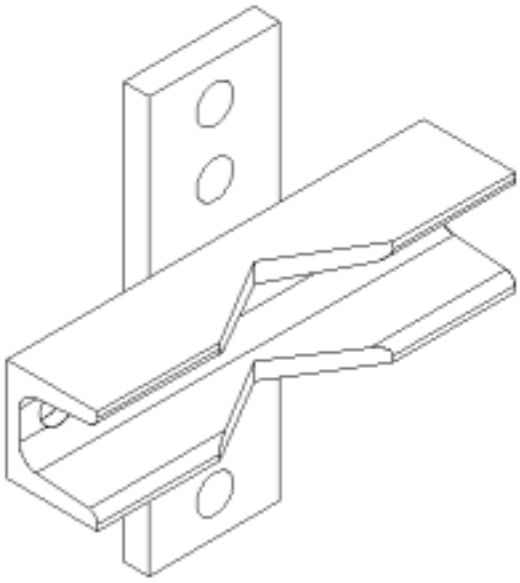

Type	U40-160F
Dimensions (H x W x D) (∅ x H)	See above drawing
Weight	1.3 kg
Materials	Hot dip galvanized steel
Versions	-
Options	-

Aerial Oy
Box 22
04401 Järvenpää
Finland
Tel. +358 9 2790 120
Fax +358 9 2910 210
http://www.aerial.fi
aerial@aerial.fi

ASSEMBLY PROFILE

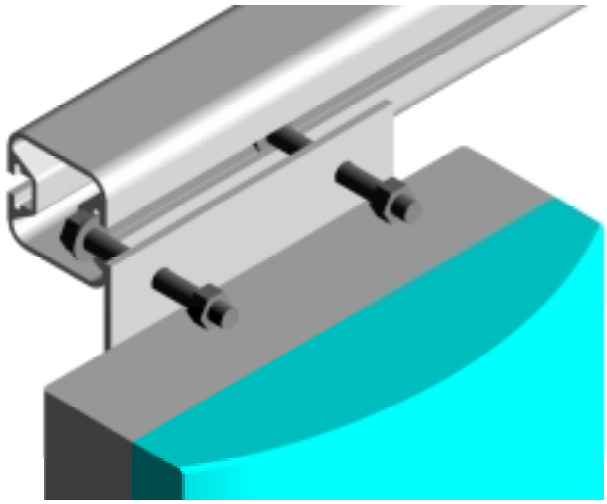

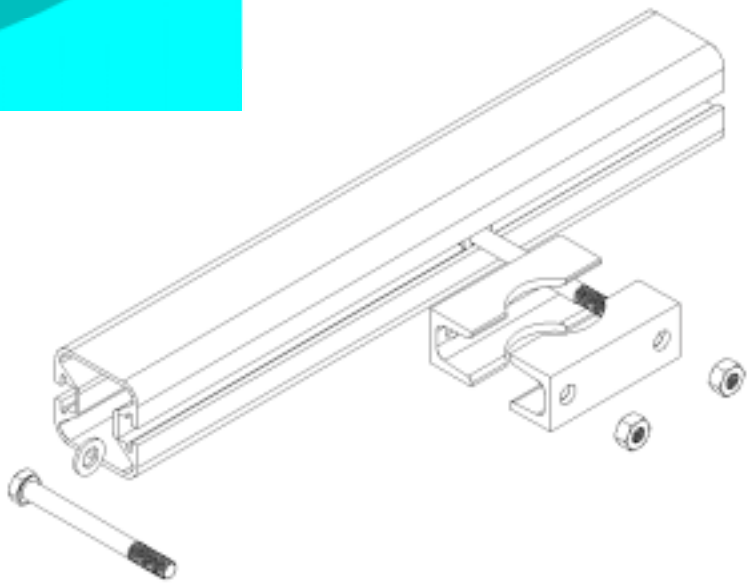

Type	Assembly profile
Dimensions (H x W x D) (∅ x H)	70 x 70 x 6000
Weight	3.58 kg/m
Mounting diameter	M12 bolts
Materials	Aluminium EN-AW6063 T6
Versions	-
Options	Anodic oxidation Multiple mounting methods

Aerial Oy
Box 22
04401 Järvenpää
Finland
Tel. +358 9 2790 120
Fax +358 9 2910 210
http://www.aerial.fi
aerial@aerial.fi

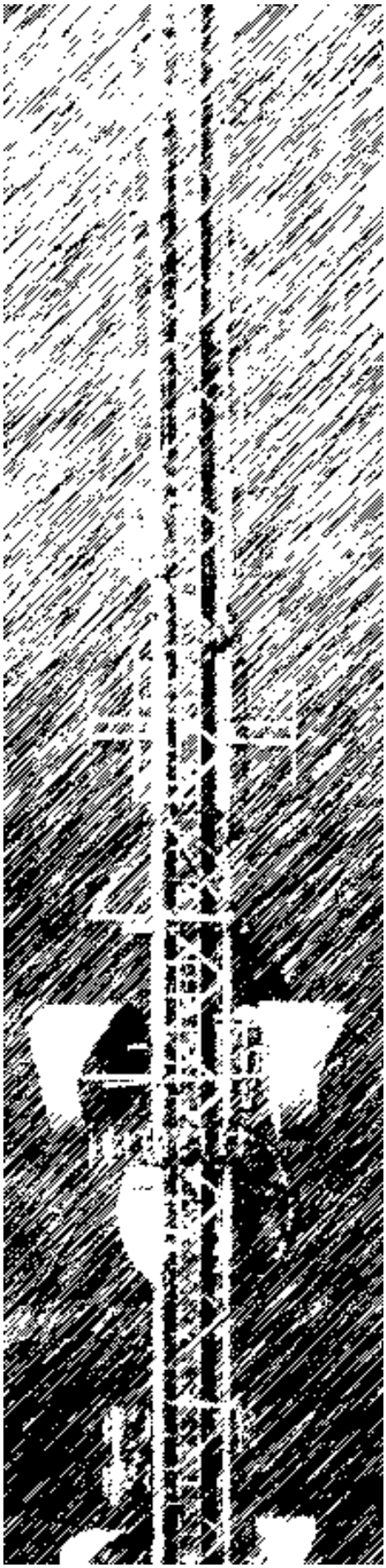

ACOME

HYPERCELL®

Aerial Oy

Box 22
04401 Järvenpää
Finland

Tel. +358 9 2790 120
Fax +358 9 2910 210

http://www.aerial.fi
aerial@aerial.fi

HYPERCELL® 2002

Cables and accessories for radiocommunication networks

ACOME

Table of Content

ACOME PRESENTATION 2-5

THE HYPERCELL® COAXIAL CABLE RANGE 6-9

SELECTION GUIDE OF HYPERCELL® CABLES 10-11

HYPERCELL® FLEXIBLE CABLES, F SERIE 12-27

HYPERCELL® SUPERFLEXIBLE CABLES, SF SERIE 28-35

HYPERCELL® EXTRAFLEXIBLE CABLES, XF SERIE 36-39

HYPERCELL® JUMPERS AND CABLE ASSEMBLIES 40-43

HYPERCELL® ACCESSORIES 44-51

- Connectors, accessories and adaptators 44-46
- Preparation tools 47
- Grounding kits 48
- Weatherproofing kits 49
- Hoisting grips 49
- Cable hangers 50 - 51
- Wall entries and cable boots 51

CABLE PACKING & SHIPPING INFORMATIONS 52-54

- Flexible cable 52
- SuperFlexible cable 53
- ExtraFlexible cable 53
- Weight and dimensions of cables reels 54

PRODUCT INDEX 55-59

NUMERICAL INDEX 60-64

CONVERSION TABLE 65

ACOME

HYPERCELL®

ACOME presentation

For more than 60 years, ACOME's experience has been based on its ability to constantly offer technological innovations to the market. Today, ACOME has acquired a unique expertise in the design, production and marketing of cables and systems in use in Telecommunication, automotive and building industry.

With more than 1200 employees and 110.000m² of production facilities on its main site located in Mortain (Normandy), ACOME is recognized as a world leader in the design, manufacturing and marketing of low loss HF coaxial cables and accessories, optical fiber cables and systems, LF and HF copper pair cables. With the aim to be close to its markets and customers, ACOME is present in all of the international markets, and particularly in emerging markets with production facilities in Brazil and China, in addition to a worldwide agents and distribution network.

Each of the four Operating divisions is structured and organized to answer the specificity of its targeted markets and customers.

ACOME and the Telecom industry

1932 Set up of ACOME (Association Coopérative d'Ouvriers en Matériel Électrique).

1949 ACOME is the first manufacturer to insulate Telecom wires with polyvinyl chloride (PVC).

1954 First vinyl compound production plant for cable insulation and jacketting.

1960 Over 30% of french cars are equipped with ACOME sparking plug leads.

1972 ACOME manufactures in France a new range of corrugated outer conductor coaxial cables.

1976 ACOME is the first french manufacturer to introduce e-beam technology for polymer cross-linking.

1977 Development of double layers cellular extrusion.

1983 First production of optical fiber cables.

1984 Mass production of cross-linked insulated wires.

1993 ISO 9001 certification.

1998 QS 9000 certification.

1999 Installation of the first tower of the cable fibre- drawing plant.

2000 The industrial site of Mortain is ISO 14001 certified.

HYPERCELL®

ACOME presentation

DATA TELECOM Division

Copper and optical fiber cables for:

- LAN, MAN & WAN networks
- Industrial and automated control networks
- Telecom trunk, distribution and subscribers networks
- Switching and transmission equipments.

ELECTRICAL EQUIPEMENT Division

Wires and cables for:

- Automotive industry
- Transport networks
- Railways and naval construction equipments.

BUILDING components Division

Profiled and tube sections for:

- Heating and cooling floor systems
- Fluid distribution systems
- Profiled sections for windows.

RADIO VIDEOCOM Division

Twenty years at the service of mobile communication, telecommunication and broadband videocommunication networks operators have led ACOME to constantly improve the quality and reliability of its products and services in order to meet the ever-evoluting needs of these markets world-wide.

The Radio Videocom division offers a full range of low loss 50 Ohm coaxial cables designated as HYPERCELL®, and characterised by a cellular foam polyethylene (PE) dielectric, overlaid with a corrugated copper tape (Flexible & SuperFlexible of serie F & SF), or with a copper or aluminium tape and braid for ExtraFlexible cables of serie XF.

The design and choice of connectors and accessories necessary to a complete feeder line system , optimised for each cable size, ensure a perfect electrical and mechanical integrity of the coaxial transmission line between radio equipments and between transmitters or base stations and antennas.

The HYPERCELL® cable range meets the demand of the different markets utilising low loss foam dielectric coaxial cables. These markets are:

Mobile communication networks.
Private and Government telecommunication networks. (PMR, Microwave, Wireless Local Loop)
Radio and television broadcast.

With the following main customers:

- Private and public networks operators.
- Installers.
- Radio equipment manufacturers (OEM).
- System integrators.
- Industry, Transport, Security and Defence.
- Radio and TV broadcasters.

In addition, the Radio Videocom division offers the GIGACOME®, range of 75 Ohm coaxial cables for CATV videocommunication networks.

HYPERCELL®

ACOME presentation

ACOME: an optimised service

Fully aware of its role as an advisor, a solution specifier and a provider of technical and sales support, ACOME offers a customised service that guarantees the commitment of all the employees to deal with and satisfy the customer's demand with efficiency, flexibility and ponctuality.

Without being exhaustive, these services particularly apply to:

- Technical assistance to system design.
- Product training and site installation.
- Pre-comissioning and assistance to comissioning.
- Special packing and specific conditionning.
- EDI links with our customers and partners.

From its 25000 m² logistical platform, the ACOMEX department delivers from stock in less than 72 hours throughout the whole Europe; an express required delivery in France will be guaranteed within 24 hours and requests for urgent delivery will be processed immediately with the sole limitation of the transport time.

ACOME: a leader in many technologies

With a budget in excess of 10% of sales, the R & D department maintains a permanent technological survey on material, products and processes in order to achieve a triple objective:

- Constantly improve the existing products.
- Develop new products for existing and emerging markets.
- Provide technical and scientific support to our customers.

ACOME is actively involved in the international standardisation comittees which guarantee the involvement in the latest technological innovations and standards.

ACOME is specialised in a number of technical processes such as metal-working/wire-drawing, plastics chemistry, plastics extrusion, electro-physical cross-linking and drawing of silicium preforms.

ACOME delivers to its customers the most advanced products while keeping them constantly informed of the new technologies that have been used during the production of these products.

HYPERCELL®

ACOME presentation

ACOME: quality, a constant concern

The objective of quality is effective at all stages, from design, to production and marketing.

It is achieved through high personnel involvement at every level of responsability, as soon as the original customer contact and the commercial proposal until the product shipment and the after-sales services.

The demand for quality is also enlarged to develop procedures for the environment protection in all manufacturing processes and production stages.

This level of Quality Assurance has allowed ACOME to receive the following world-wide recognition:

- ISO 9001
- QS 9000 (Automotive Ind.)
- ISO 14001 (Industrial site of Mortain)

All the products announced in this catalogue, fitted and installed in accordance with assembly instructions and state of the art good practices are guaranteed for a period of 10 years.

HYPERCELL®

The HYPERCELL® coaxial cable range

The 50 Ohm low loss foam dielectric coaxial cables are available in three different versions:

Flexible (F serie) featuring an annularly corrugated outer conductor available in diameters of 1/4 '', 3/8'', 1/2'', 5/8'', 7/8'', 1-1/4'', 1-5/8'' & 2-1/4''.

SuperFlexible (SF serie) manufactured with helical corrugation in the outer conductor in diameters of 1/4 '', 3/8 '' & 1/2''.

ExtraFlexibles (XF serie) overlapping tape and braid as outer conductor in diameters of 1/16 '', 1/4'' & 3/8''.

All of these cable are constructed with an inner conductor, a low loss foam dielectric, an outer conductor and a protective jacket.

The inner conductor is made of a copper wire, a copper clad aluminium wire, a smooth or corrugated copper tube, according to the different cable size. The high conductivity copper which is used allows to perform very low attenuation.

The dielectric insulator is extruded and bonded to the inner conductor, thus preventing any longitudinal movement due to temperature changes or mechanical constraints. This foam insulator is made of a mixture of low loss dielectric polyethylene melted and extruded with an inert gas injection process. This method allows to produce low density, fine close and homogeneous cells. A very thin layer of polyethylene is finally applied which profiles the diameter consistency of the cable core, thus guaranteeing a very high mechanical integrity and accurate concentricity over the inner conductor for a remarquable impedance regularity.
This dielectric being non hygroscopic, it ensures a much extended service of the cable in adverse environment.
The outer conductors of Flexible (F serie) and SuperFlexible (SF serie) coaxial cables are made with a oxygen free copper tape having an electrical conductivity of more than 100% IACS, which is formed, seam welded and helicaly or annularly corrugated around the core.

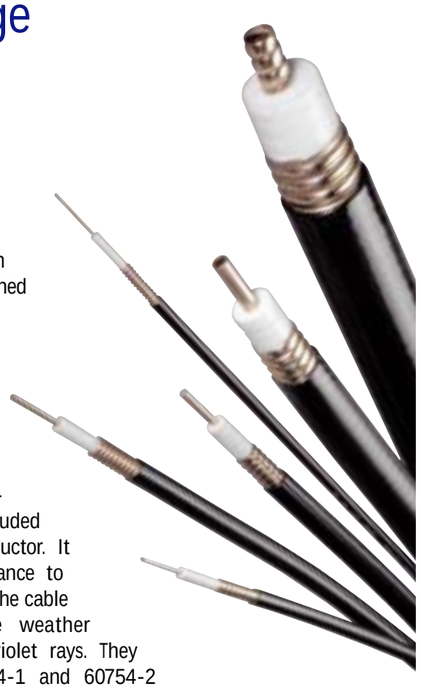

The outer conductor of the ExtraFlexible cable range (XF serie) is made of an overlapped aluminium tape covered with a tinned copper braid (diameter 1/16'' & 1/4'') or a copper tape and braid for 3/8'' diameter.

The halogen free, carbon black polyethylene jacket is extruded around the outer conductor. It provides a high resistance to abrasion, and protects the cable against very adverse weather conditions and ultra-violet rays. They comply with IEC60754-1 and 60754-2 standards.

ExtraFlexible cables (XF serie) being normally installed inside equipments or equipment room are provided with a PVC protective jacket which meet the requirement of IEC 60332-1 standard.

For many applications inside buildings, confined spaces tunnels and metros, the whole range of HYPERCELL® cables can be offered with an halogen free, fire retardant, low smoke and gas emission jacket.

These jackets referenced LSOH have successfully passed the tests specified by the following international standards:

- IEC 60754-1 — Gases emitted during combustion (Hydrochloric acid < 0.5%)
- IEC 60754-2 — Acidity index of gases (pH > 4.3, conductivité < 2.5µ Siemens/mm).
- IEC 61034 — Smoke generation of solid material.
- IEC 60332-1 — Tests on a single vertical cable under fire conditions (flame retardant cables)
- IEC 60332-3A — Tests on bunched vertical cables under fire conditions. (fire retardant cables)

HYPERCELL®

The HYPERCELL® coaxial cable range

HYPERCELL® cables are also available with HFR jacket, which, in addition of the LSOH fire retardancy performances requirement of CEI 60332-3 A, have been tested and approved by the Underwriters' Laboratories Inc. (UL 1666/ CATVR - file E195007 & E205044).

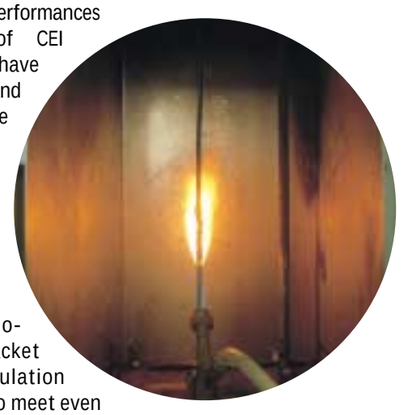

Other non-halogenated jacket material formulation are available to meet even more stringent requirements of specific standards such as RATP K26 (Parisian Metro).

HYPERCELL® cable range provide high flexibility while keeping outstanding mechanical and electrical characteristic, tested under the stringent procedures of following international standards:

• Bending radius and flexibility	CEI 60 966 - 9.3-9.5-9.6
• Tensile & Crush strength.	CEI 60 966 - 9.1-9.4
• Uniformity of impedance	CEI 60 966 - 8.2
• Environmental	CEI 60 966 - 10.3-10.4-10.5
• Waterproofing	CEI 60 966 - 10.7
• Impedance	NFC 90131/CEI 60 966 (9.2)
• Attenuation & relative velocity	CEI 60 966 - 8.3-8.5
• Power rating	CEI 96-0-1
• VSWR	CEI 60 966 - 8.1
• Screening effectiveness (EMI/RFI)	CEI 60 966 - 8.9

Definitions

Minimum bend radius: The smallest radius a cable can be bent without compromising electrical performances or damaging the cable (Typically 10 times the diameter of the cable).

Tensile strengh: The force required to cause a 0.1% permanent elongation of the cable.

Crush Strengh: The force required to cause a 1% deformation of the cable diameter.

Average Power: It represents the safe long term operating temperature of the dielectric, based on VSWR of 1.00, Ambient temperature of 40°C and inner conductor temperature of 100°C.

Attenuation: This is the measurement in dB of signal loss in a cable as a result of:

- Inner and outer conductor losses
- Dielectric loss
- Radiation loss, based on 20°C ambient temperature and VSWR of 1.00.

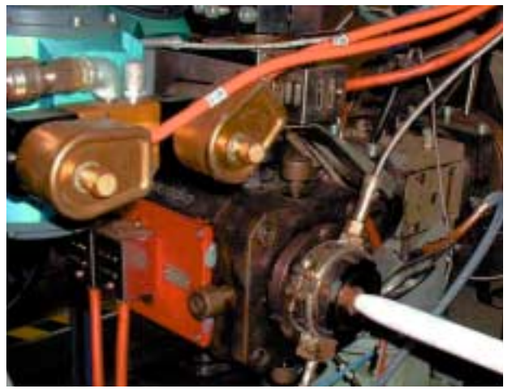

Shielding (EMI/RFI): Ability of the cable to keep unwanted signals out and wanted signals in. Shielding effectiveness ensures transmission security, eliminates interferences and reduces attenuation while allowing use of higher power.
Performance of corrugated cables exceed -120dB.

Return Loss (R.L.)

This is the decibel (dB) power ratio of the incident power to the reflected power @ 20° ambient temperature. It can be converted in VSWR or Reflection coefficient.

The ACOME cables of the HYPERCELL® range being manufactured and controlled according to very severe standards, show return loss values (R.L.) which solely depends on the frequency range of the cable, without any selection.

Frequency MHz	R.L.dB (ROS) typical	R.L.dB (VSWR) max
1-400	-23 (1.15)	
400-500		-26.5 (1.10)
500-800	-23 (1.15)	
800-1000		-26.5 (1.10)
1000-1700	-23 (1.15)	
1700-2200		-24.0 (1.12)
2200-2500	-23 (1.15)	
2500-2700		-23.5 (1.13)
2700-3000	-23 (1.15)	

Passive intermodulation

Passive intermodulation (PIM) is a form of signal distortion that occurs whenever two or more frequencies signals conduct simultaneously in a passive device, such as a cable or connector, which contains some nonlinear response.
The non-linear behavior produces spurious signals whose frequencies are linear combinations of the frequencies of the original signals.

The lower odd-ordered intermodulation (IM) products (e.g. f (IM3)=2f1-f2) are usually the most problematic in the wireless industry since they have the highest potential of falling within the receive band, or up-link, of a base station, creating radiofrequency interference in the receiver. Although frequency allocations are specifically designed to guard against this problem, collocation of two or more base station transceivers at a single site substantially increases the risk of PIM interference, as illustrated in figure below.

Base stations built for mobile communications systems such as Personal Communication Service (PCS 1900), Advance Mobile Phone System (AMPS), Global System for Mobile communications (GSM), and Digital Communications System (DCS 1800), use DIN 7-16 and Type N coaxial connectors to handle the high transmit power requirements.

At high power (above 1W), non-linearities in coaxial connectors become apparent and measurable. The many possible causes of intermodulation in coaxial connectors and cables include poor mechanical contact, dissimilar metals in direct contact, ferrous content in the conductors, debris within the connector, poor surface finish, corrosion, vibration, and temperature variations.

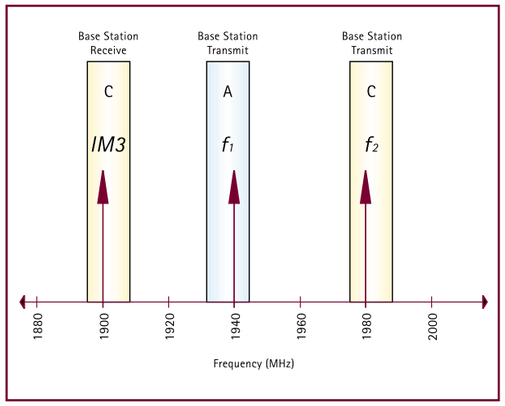

HYPERCELL®
The HYPERCELL® coaxial cable range

The figure above shows the potential third order intermodulation distortion occuring in two collocated base station transceivers in the broadband PCS band. Bands A and C are both transmitting, and a non linearity cause a third order IM distortion to appear in the receive area of band C. [f (IM3) = 2f1-f2 = 2*1940 - 1980 = 1900 MHz]

Measurement techniques: the reflected sweeping method

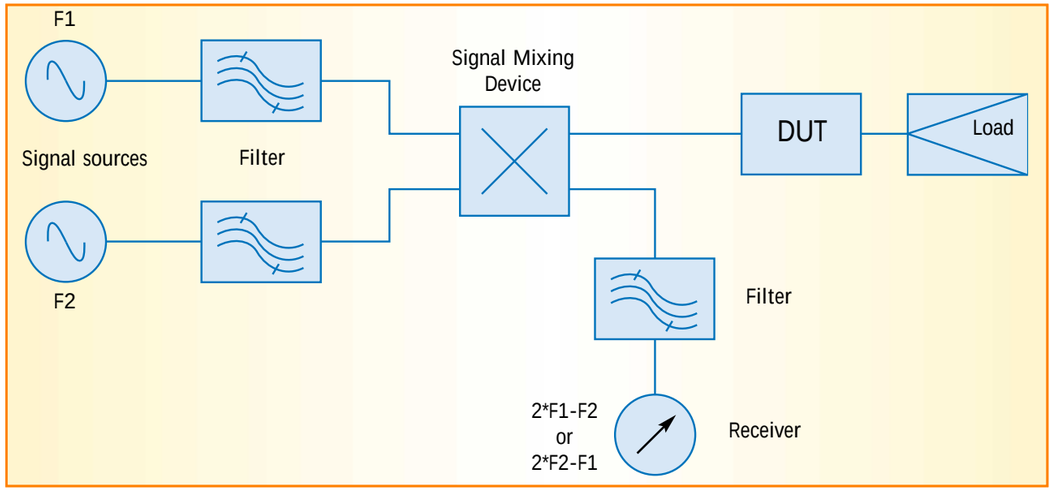

Measurements can be obtained in two ways:

- Holding the source 1 at the frequency F1 and sweeping source 2 from F2 min to F2 max in defined steps (with F1 less than equal F2 min).
- Holding source 2 at the frequency F2 and sweeping source 1 from F1 min to F1 max in defined steps (with F2 greater than equal F1 max).

For example, in the GSM band, measurements can be done in holding source 2 at F2 = 960 MHz and sweeping source 1 upward from F1min = 925 MHz to F1max = 935 MHz in steps of 2.5 MHz.

This method allows a curve representation of the passive intermodulation versus the sweeped frequencies or the intermodulation product (2*F1-F2). Usually, PIM results are expressed in dBc, that means measurements results in dBm are compared to the source power.

For example, source carrier power is set to Pc = 40 dBm, and PIM measurement gives value of R = -110 dBm, result expressed in dBc is obtained by doing the following calculation:

PIM (dBc) = Pc (dBm) - R(dBm)*

**In the example, PIM = -150 dBc.*

It must be noted that the test equipment is calibrated by measuring the intermodulation level of a reference load. Therefore, if the reference loads shows a level of -165 dBc, the level of the measured products cannot be lower than -165 dBc. It is then important to evaluate the difference between the mesured values and the reference value.

HYPERCELL®

Selection guide of HYPERCELL® cables

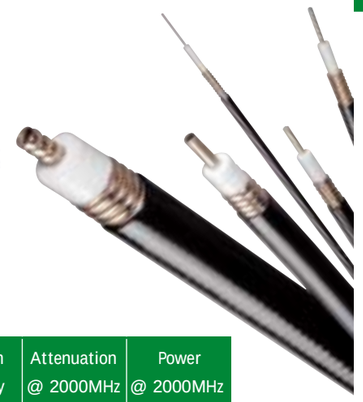

Flexible cables

Cable type	Standard Jacket	Reference ACOME	Nominal size (")	Diameter on jacket (mm)	Min.Bend. Radius (mm)	Cable Weight (kg/m)	Maximum Frequency (GHz)	Attenuation @ 2000MHz (dB/100m)	Power @ 2000MHz (kW)
HPL50-1/4F	Black P.E	M 2930 Z	1/4	9.50	40	0.129	15.00	20.60	0.34
	LSOH	M 2932 Z	1/4	9.50	40	0.145	15.00	20.60	0.34
	HFR	M 5309 Z	1/4	9.50	40	0.145	15.00	20.60	0.34
HPL50-3/8F	Black P.E	M 2934 Z	3/8	11.50	50	0.185	12.00	15.15	0.45
	LSOH	M 2936 Z	3/8	11.50	50	0.204	12.00	15.15	0.45
	HFR	M 5310 Z	3/8	11.50	50	0.204	12.00	15.15	0.45
HPL50-1/2F	Black P.E	M 1473 Z	1/2	16.00	70	0.250	8.00	10.62	0.81
	LSOH	M 2831 Z	1/2	16.00	70	0.276	8.00	10.62	0.81
	HFR	M 5322 Z	1/2	16.00	70	0.276	8.00	10.62	0.81
HPL50- 5/8F	Black P.E	M 5038 Z	5/8	22.50	90	0.448	6.00	7.73	1.17
	LSOH	M 5039 Z	5/8	22.50	90	0.500	6.00	7.73	1.17
	HFR	M 5357 Z	5/8	22.50	90	0.500	6.00	7.73	1.17
HPL50-7/8F	Black P.E	M 1474 Z	7/8	27.75	120	0.598	5.00	6.13	1.63
	LSOH	M 2832 Z	7/8	27.75	120	0.650	5.00	6.13	1.63
	HFR	M 5323 Z	7/8	27.75	120	0.650	5.00	6.13	1.63
HPL50-1-1/4F	Black P.E	M 2937 Z	1-1/4	39.50	200	0.940	3.00	4.45	2.31
	LSOH	M 2938 Z	1-1/4	39.50	200	1.070	3.00	4.45	2.31
	HFR	M 5358 Z	1-1/4	39.50	200	1.070	3.00	4.45	2.31
HPL50-1-5/8F	Black P.E	M 2939 Z	1-5/8	50.00	300	1.448	2.50	3.80	2.81
	LSOH	M 2940 Z	1-5/8	50.00	300	1.600	2.50	3.80	2.81
	HFR	M 5359 Z	1-5/8	50.00	300	1.600	2.50	3.80	2.81
HPL50-2-1/4F	Black P.E	M 5040 Z	2-1/4	59.70	360	1.950	2.20	3.46	3.50

HYPERCELL®

Selection guide of HYPERCELL® cables

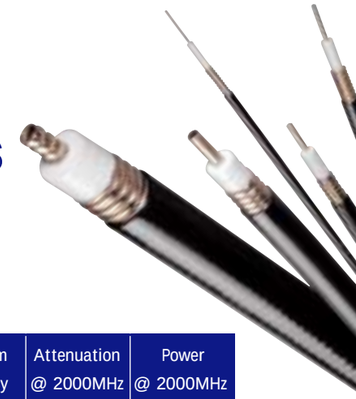

SuperFlexible cables

Cable type	Standard Jacket	Reference ACOME	Nominal size (")	Diameter on jacket (mm)	Min.Bend. Radius (mm)	Cable Weight (kg/m)	Maximum Frequency (GHz)	Attenuation @ 2000MHz (dB/100m)	Power @ 2000MHz (kW)
HPL50-1/4SF	Black P.E	M 2929 Z	1/4	7.70	25	0.100	18.00	28.52	0.20
	LSOH	M 2931 Z	1/4	7.70	25	0.109	18.00	28.52	0.20
	HFR	M 5302 Z	1/4	7.70	25	0.109	18.00	28.52	0.20
HPL50-3/8SF	Black P.E	M 2933 Z	3/8	10.80	25	0.163	12.00	19.45	0.37
	LSOH	M 2935 Z	3/8	10.80	25	0.176	12.00	19.45	0.37
	HFR	M 5306 Z	3/8	10.80	25	0.176	12.00	19.45	0.37
HPL50-1/2SF	Black P.E	M 2839 Z	1/2	13.40	25	0.227	10.00	16.00	0.52
	LSOH	M 2830 Z	1/2	13.40	25	0.240	10.00	16.00	0.52
	HFR	M 5308 Z	1/2	13.40	25	0.240	10.00	16.00	0.52

ExtraFlexible cables

Cable type	Standard Jacket	Reference ACOME	Nominal size (")	Diameter on jacket (mm)	Min.Bend. Radius (mm)	Cable Weight (kg/m)	Maximum Frequency (GHz)	Attenuation @ 2000MHz (dB/100m)	Power @ 2000MHz (kW)
HPL50-1/16XF	White PVC	M 5330 Z	1/16	2.80	15	0.013	18.00	94.00	0.041
	LSOH	M 5360 Z	1/16	2.80	15	0.015	18.00	94.00	0.041
	HFR	M 5331 Z	1/16	2.80	15	0.015	18.00	94.00	0.041
HPL50-1/4XF	White PVC	M 5300 Z	1/4	6.85	20	0.065	15.00	31.59	0.26
	LSOH	M 5361 Z	1/4	6.85	20	0.069	15.00	31.59	0.26
	HFR	M 5332 Z	1/4	6.85	20	0.069	15.00	31.59	0.26
HPL50-3/8XF	White PVC	M 5312 Z	3/8	10.10	25	0.106	12.00	19.30	0.41
	LSOH	M 5362 Z	3/8	10.10	25	0.111	12.00	19.30	0.41
	HFR	M 5333 Z	3/8	10.10	25	0.111	12.00	19.30	0.41

The HYPERCELL® Flexible cable range are designed for long service life feeders, resulting in highly efficient signal transfer between transmission equipments and antennas. The annular corrugation of the solid copper outer conductor allow continuous EMI/RFI shielding while offering great strength and adequate flexibility for easy installation in towers.
The black polyethylene jacket is fully waterproof and ultraviolet resistant, allowing long term operation in outdoor applications.
Other jacket material is available for fire retardancy in indoor applications.
A full range of connectors and accessories ensure the complete integrity of the feeder line for long life.

Flexible Cable

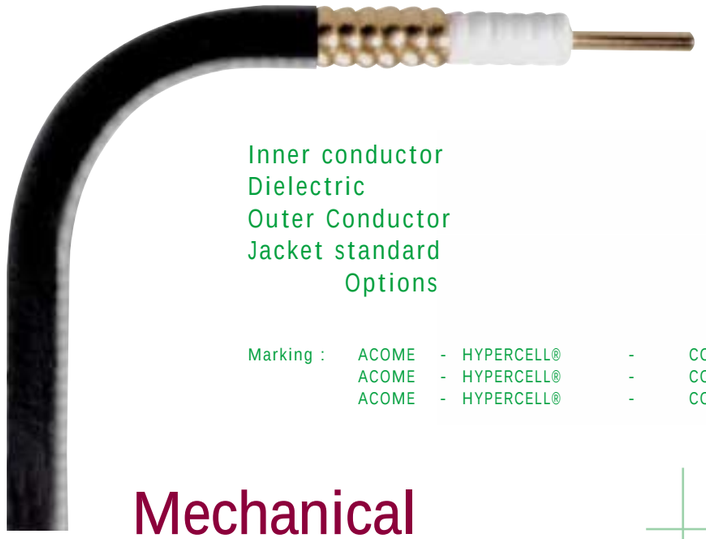

HPL50-1/4 F

Inner conductor	Copper wire	ø	2.50	±	0.05 mm
Dielectric	Cellular PE	ø	6.40	±	0.20 mm
Outer Conductor	Corrugated copper	ø	7.60	±	0.20 mm
Jacket standard	Black PE	ø	9.50	±	0.30 mm — M 2930 Z
Options	LSOH : IEC 332-3A	ø	9.50	±	0.30 mm — M 2932 Z
	HFR : IEC 332-3A / UL1666 / K26	ø	9.50	±	0.30 mm — M 5309 Z / R

Marking :	ACOME	- HYPERCELL®	-	COAX	HPL 50-1/4	-	Flexible	-	M 2930	-	lot : year / week - meter
	ACOME	- HYPERCELL®	-	COAX LSOH	HPL 50-1/4	-	Flexible	-	M 2932	-	lot : year / week - meter
	ACOME	- HYPERCELL®	-	COAX LSOH HFR	HPL 50-1/4	-	Flexible	-	M 5309	-	lot : year / week - meter

Flexible

Mechanical characteristics

Cable weight (kg/m) (PE) (LSOH)	0.129	0.145
Minimum bending radius (mm)	40	
Multiple bending radius (mm)	100	
Number of bends	20	
Tensile strength (N)	560	
Installation temperature (°C)	- 25 / + 60	
Operating temperature (°C)	- 40 / + 85	

Shipping informations

Standard	500 m ± 5%
Gross weight (PE) kg	94 // 110*
Net weight (PE // LSOH-HFR) kg	65 // 72.50

For sea freight

For more detailed information see page 52 - 54

Electrical characteristics

Characteristic impedance (Ω)	50 ± 1
Max. frequency (MHz)	15.000
Relative velocity (%)	85
Capacitance (pF/m)	78.5 ± 1.5
Peak power Rating (kW)	7.5
Screening effectiveness (dB)	>120
Inner conductor DC resistance (Ω/km)	3.6
Outer conductor DC resistance (Ω/km)	3.7
Max. operating voltage (V.RMS)	870

Attenuation @ 20°C (dB)
Power rating @ 40°C (kW) and inner conductor @100°C
Return Loss max @ 20°C (dB)
Return Loss typical - 23dB (1@3000 MHz)

FQ (MHz)	Attenuation (dB/100m)	R/L (dB)	Power rating (kW)
30	2.25	-	3.06
80	3.71	-	1.85
150	5.14	-	1.35
450	9.14	- 26.5	0.76
900	13.27	- 26.5	0.53
960	13.75	- 26.5	0.52
1000	14.06	- 26.5	0.50
1500	17.54	-	0.40
1700	18.83	- 24.0	0.38
1800	19.43	- 24.0	0.36
2000	20.60	- 24.0	0.34
2200	21.75	- 24.0	0.33
2500	23.37	- 23.5	0.31
2700	24.42	- 23.5	0.30
3000	25.80	-	0.27

Intermodulation IM3 (1800 MHz) -155 dBc max.
(-163 dBc typical)

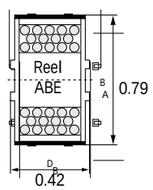

Connectors

N male C 0066 A

N female C 0056 A

N male right angle C 0065 A

Grounding kits

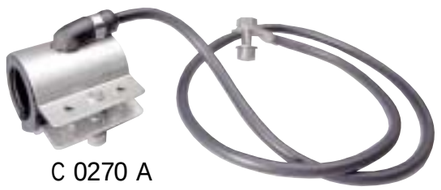

C 0270 A

Preparation tools

C 0029 A

See page 44-51 for details of accessories

HPL50-3/8 F

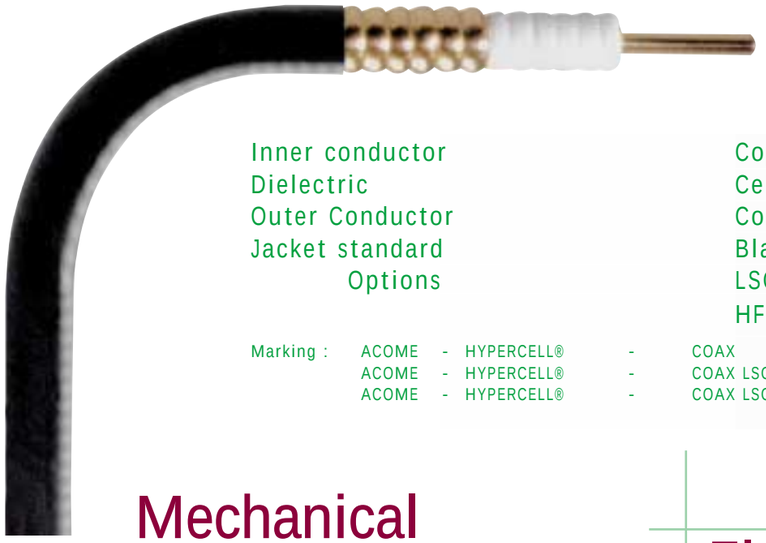

Inner conductor	Copper wire	ø	3.30	±	0.05 mm
Dielectric	Cellular PE	ø	8.30	±	0.20 mm
Outer Conductor	Corrugated copper	ø	9.50	±	0.20 mm
Jacket standard	Black PE	ø	11.50	±	0.30 mm — M 2934 Z
Options	LSOH : IEC 332-3A	ø	11.50	±	0.30 mm — M 2936 Z
	HFR : IEC 332-3A / UL1666 / K26	ø	11.50	±	0.30 mm — M 5310 Z / R

Marking :											
ACOME	- HYPERCELL®	-	COAX	HPL 50-3/8	-	Flexible	-	M 2934	-	lot : year / week - meter
ACOME	- HYPERCELL®	-	COAX LSOH	HPL 50-3/8	-	Flexible	-	M 2936	-	lot : year / week - meter
ACOME	- HYPERCELL®	-	COAX LSOH HFR	HPL 50-3/8	-	Flexible	-	M 5310	-	lot : year / week - meter

Flexible

Mechanical characteristics

Cable weight (kg/m) (PE) (LSOH)	0.185	0.204
Minimum bending radius (mm)	50	
Multiple bending radius (mm)	100	
Number of bends	20	
Tensile strength (N)	700	
Installation temperature (°C)	- 25 / + 60	
Operating temperature (°C)	- 40 / + 85	

Shipping informations

Standard	500 m ± 5%
Gross weight (PE) kg	121.50 // 137.50*
Net weight (PE // LSOH-HFR) kg	92.50 // 102.00

For sea freight

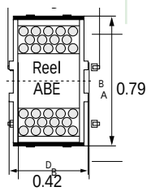

For more detailed information see page 52 - 54

Electrical characteristics

Characteristic impedance (Ω)	50 ± 1
Max. frequency (MHz)	12.000
Relative velocity (%)	85
Capacitance (pF/m)	78 ± 1.5
Peak power Rating (kW)	12.8
Screening effectiveness (dB)	>120
Inner conductor DC resistance (Ω/km)	2.10
Outer conductor DC resistance (Ω/km)	2.20
Max. operating voltage (V.RMS)	1130

Attenuation @ 20°C (dB)
Power rating @ 40°C (kW) and inner conductor @100°C
Return Loss max @ 20°C (dB)
Return Loss typical - 23dB (1@3000 MHz)

Intermodulation IM3 (1800 MHz) -155 dBc max. (-163 dBc typical)

FQ (MHz)	Attenuation (dB/100m)	R/L (dB)	Power rating (kW)
30	1.72	-	4.00
80	2.84	-	2.44
150	3.93	-	1.80
450	7.01	- 26.5	0.99
900	10.17	- 26.5	0.69
960	10.54	- 26.5	0.66
1000	10.77	- 26.5	0.65
1500	13.47	-	0.52
1700	14.40	- 24.0	0.49
1800	14.82	- 24.0	0.47
2000	15.15	- 24.0	0.45
2200	16.00	- 24.0	0.43
2700	18.03	- 23.5	0.38
3000	19.20	-	0.36

Connectors

7-16 male C 0053 A

7-16 male right angle C 0052 A

7-16 female C 0051 A

N male C 0064 A

N female C 0062 A

N male right angle C 0063 A

Hangers

C 0328 A

Grounding kits

C 0291 A

Preparation tools

C 0230 A

See page 44-51 for details of accessories

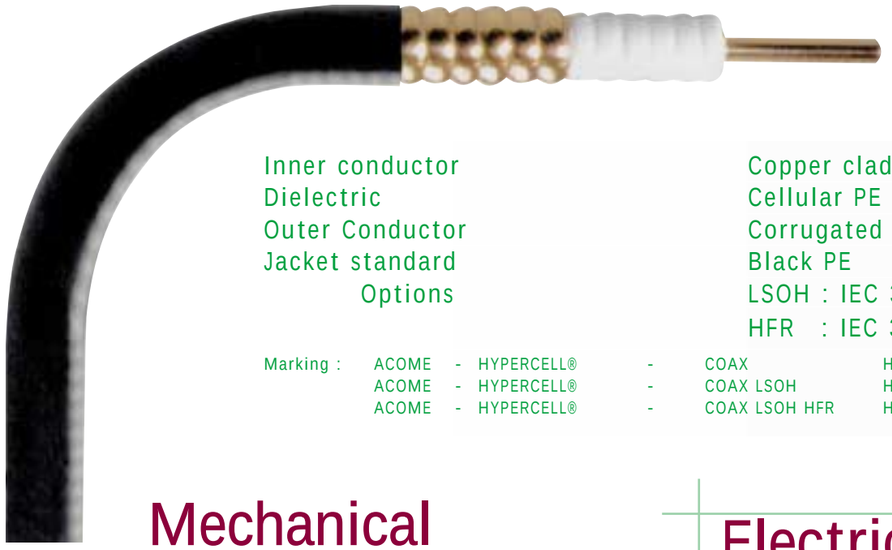

HPL50-1/2 F

Inner conductor	Copper clad aluminum wire	ø	4.80	±	0.05 mm
Dielectric	Cellular PE	ø	11.90	±	0.20 mm
Outer Conductor	Corrugated copper	ø	13.70	±	0.20 mm
Jacket standard	Black PE	ø	16.00	±	0.30 mm — M 1473 Z
Options	LSOH : IEC 332-3A	ø	16.00	±	0.30 mm — M 2831 Z
	HFR : IEC 332-3A /UL1666 / K26	ø	16.00	±	0.30 mm — M 5322 Z / R

Marking :	ACOME	-	HYPERCELL®	-	COAX	HPL 50-1/2	-	Flexible	-	M 1473	-	lot : year / week - meter
	ACOME	-	HYPERCELL®	-	COAX LSOH	HPL 50-1/2	-	Flexible	-	M 2831	-	lot : year / week - meter
	ACOME	-	HYPERCELL®	-	COAX LSOH HFR	HPL 50-1/2	-	Flexible	-	M 5322	-	lot : year / week - meter

Flexible

Mechanical characteristics

Cable weight (kg/m) (PE) (LSOH)	0.250	0.276
Minimum bending radius (mm)	70	
Multiple bending radius (mm)	125	
Number of bends	20	
Tensile strength (N)	1100	
Installation temperature (°C)	- 25 / + 60	
Operating temperature (°C)	- 40 / + 85	

Shipping informations

Standard	500 m ± 5%
Gross weight (PE) kg	186 // 225*
Net weight (PE // LSOH-HFR) kg	125 // 138

*For sea freight

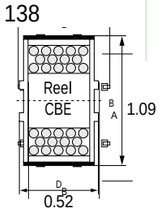

For more detailed information see page 52 - 54

Electrical characteristics

Characteristic impedance (Ω)	50 ± 1
Max. frequency (MHz)	8000
Relative velocity (%)	88
Capacitance (pF/m)	76 ± 1.5
Peak power Rating (kW)	25.6
Screening effectiveness (dB)	>120
Inner conductor DC resistance (Ω/km)	1.60
Outer conductor DC resistance (Ω/km)	1.60
Max. operating voltage (V.RMS)	1600

Attenuation @ 20°C (dB)
Power rating @ 40°C (kW) and inner conductor @100°C
Return Loss max @ 20°C (dB)
Return Loss typical - 23dB (1@3000 MHz)

Intermodulation IM3 (1800 MHz) -155 dBc max. (-163 dBc typical)

FQ (MHz)	Attenuation (dB/100m)	R/L (dB)	Power rating (kW)
30	1.18	-	7.29
80	1.95	-	4.34
150	2.69	-	3.21
450	4.75	- 26.5	1.81
900	6.85	- 26.5	1.25
960	7.08	- 26.5	1.21
1000	7.25	- 26.5	1.18
1500	9.03	-	0.95
1700	9.68	- 24.0	0.89
1800	10.00	- 24.0	0.86
2000	10.62	- 24.0	0.81
2200	11.12	- 24.0	0.77
2500	12.00	- 23.5	0.72
2700	12.53	- 23.5	0.67
3000	13.30	-	0.65

Connectors

7-16 male	C 0006 A
7-16 female right angle	C 0050 A
7-16 female	C 0001 A
N male	C 0061 A
N male right angle	C 0060 A
N female	C 0059 A
EIA 7/8	C 0079 A
inner 7/8	C 0084 A

Hangers and hoisting grips

C 0319 A

C 0265 A

C 0332 A

C 0109 A
C 0157 A

C 0110 A
C 0158 A

C 0199 A

Preparation tools

C 0008 C

Grounding kits

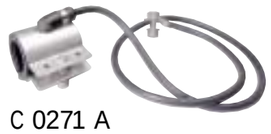

C 0271 A

C 0271 S

See page 44-51 for details of accessories

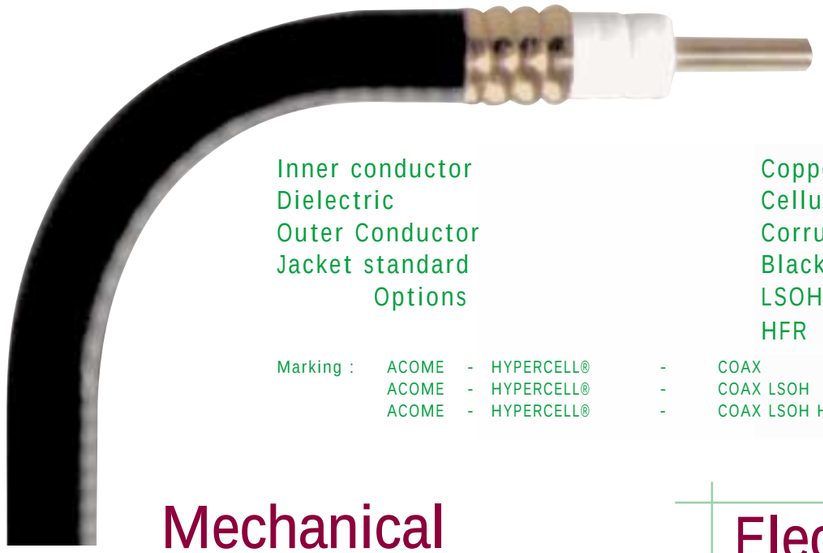

HPL50-5/8 F

Inner conductor	Copper tube	ø	7.05	±	0.10 mm
Dielectric	Cellular PE	ø	17.20	±	0.20 mm
Outer Conductor	Corrugated copper	ø	19.70	±	0.20 mm
Jacket standard	Black PE	ø	22.50	±	0.30 mm — M 5038 Z
Options	LSOH : IEC 332-3A	ø	22.50	±	0.30 mm — M 5039 Z
	HFR : IEC 332-3A - K26	ø	22.50	±	0.30 mm — M 5357 Z / R

Marking :	ACOME	-	HYPERCELL®	-	COAX	HPL 50-5/8	-	Flexible	-	M 5038	-	lot : year / week - meter
	ACOME	-	HYPERCELL®	-	COAX LSOH	HPL 50-5/8	-	Flexible	-	M 5039	-	lot : year / week - meter
	ACOME	-	HYPERCELL®	-	COAX LSOH HFR	HPL 50-5/8	-	Flexible	-	M 5357	-	lot : year / week - meter

Mechanical characteristics

Cable weight (kg/m) (PE) (LSOH)	0.448	0.500
Minimum bending radius (mm)	90	
Multiple bending radius (mm)	200	
Number of bends	20	
Tensile strength (N)	1150	
Installation temperature (°C)	- 25 / + 60	
Operating temperature (°C)	- 40 / + 85	

Shipping informations

Standard	500 m ± 5%
Gross weight (PE) kg	316 // 368*
Net weight (PE // LSOH-HFR) kg	224 // 250

*For sea freight

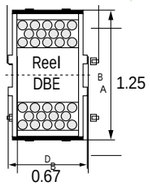

For more detailed information see page 52 - 54

Electrical characteristics

Characteristic impedance (Ω)	50 ± 1
Max. frequency (MHz)	6000
Relative velocity (%)	87
Capacitance (pF/m)	76.5 ± 1.5
Peak power Rating (kW)	58
Screening effectiveness (dB)	>120
Inner conductor DC resistance (Ω/km)	1.53
Outer conductor DC resistance (Ω/km)	1.05
Max. operating voltage (V.RMS)	2400

Attenuation @ 20°C (dB)
Power rating @ 40°C (kW) and inner conductor @100°C
Return Loss max @ 20°C (dB)
Return Loss typical - 23dB (1@3000 MHz)

Intermodulation IM3 (1800 MHz) -155 dBc max. (-163 dBc typical)

FQ (MHz)	Attenuation (dB/100m)	R/L (dB)	Power rating (kW)
30	0.81	-	10.69
80	1.34	-	6.45
150	1.86	-	4.67
450	3.35	- 26.5	2.63
900	4.91	- 26.5	1.82
960	5.09	- 26.5	1.73
1000	5.21	- 26.5	1.71
1500	6.55	-	1.37
1700	7.04	- 24.0	1.28
1800	7.27	- 24.0	1.24
2000	7.73	- 24.0	1.17
2200	8.17	- 24.0	1.10
2500	8.81	- 23.5	1.02
2700	9.22	- 23.5	0.97
3000	9.82	-	0.92

Connectors

7-16 male C 0211 A

7-16 female C 0212 A

N male C 0208 A
N male right angle C 0209 A

N female C 0210 A

EIA 7/8 C 0213 A

EIA 7/8 right angle C 0214 A

Inner 7/8 C 0084 A

Grounding Kits

C 0292 A

Hangers and hoisting grips

C 0329 A
C 0331 A

C 0330 A

C 0200 A

Preparation tools

C 0235 A

See page 44-51 for details of accessories

Flexible

HPL50-7/8 F

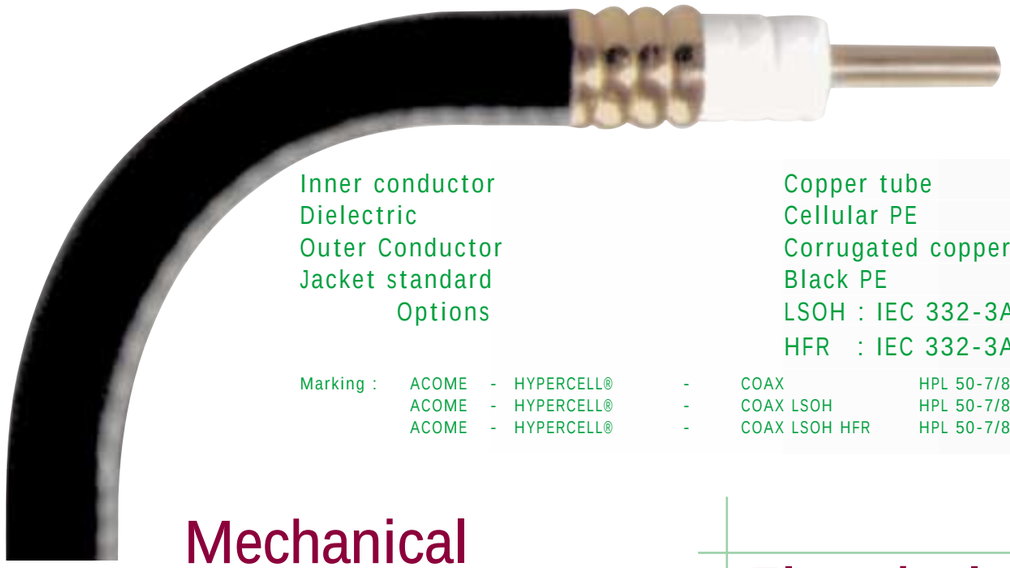

Inner conductor	Copper tube	ø 9.00 ± 0.10 mm		
Dielectric	Cellular PE	ø 22.00 ± 0.20 mm		
Outer Conductor	Corrugated copper	ø 24.70 ± 0.20 mm		
Jacket standard	Black PE	ø 27.75 ± 0.25 mm	M 1474 Z	
Options	LSOH : IEC 332-3A	ø 27.75 ± 0.25 mm	M 2832 Z	
	HFR : IEC 332-3A / K26	ø 27.75 ± 0.25 mm	M 5323 Z / R	

Marking :	ACOME	- HYPERCELL®	-	COAX	HPL 50-7/8	-	Flexible	-	M 1474	-	lot : year / week - meter
	ACOME	- HYPERCELL®	-	COAX LSOH	HPL 50-7/8	-	Flexible	-	M 2832	-	lot : year / week - meter
	ACOME	- HYPERCELL®	-	COAX LSOH HFR	HPL 50-7/8	-	Flexible	-	M 5323	-	lot : year / week - meter

Flexible

Mechanical characteristics

Cable weight (kg/m) (PE) (LSOH)	0.598	0.650
Minimum bending radius (mm)	120	
Multiple bending radius (mm)	250	
Number of bends	20	
Tensile strength (N)	1450	
Installation temperature (°C)	- 25 / + 60	
Operating temperature (°C)	- 40 / + 85	

Shipping informations

Standard	500 m ± 5%
Gross weight (PE) kg	437 // 485*
Net weight (PE // LSOH-HFR) kg	299 // 325

For sea freight

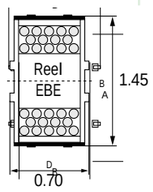

For more detailed information see page 52 - 54

Electrical characteristics

Characteristic impedance (Ω)	50 ± 1
Max. frequency (MHz)	5000
Relative velocity (%)	87
Capacitance (pF/m)	76.5 ± 1.5
Peak power Rating (kW)	90
Screening effectiveness (dB)	>120
Inner conductor DC resistance (Ω/km)	1.00
Outer conductor DC resistance (Ω/km)	0.85
Max. operating voltage (V.RMS)	3000

Attenuation @ 20°C (dB)
Power rating @ 40°C (kW) and inner conductor @100°C
Return Loss max @ 20°C (dB)
Return Loss typical - 23dB (1@3000 MHz)

Intermodulation IM3 (1800 MHz) -155 dBc max. (-163 dBc typical)

FQ (MHz)	Attenuation (dB/100m)	R/L (dB)	Power rating (kW)
30	0.64	-	15.32
80	1.06	-	9.40
150	1.47	-	6.76
450	2.64	- 26.5	3.73
900	3.88	- 26.5	2.56
960	4.02	- 26.5	2.51
1000	4.11	- 26.5	2.41
1500	5.18	-	1.92
1700	5.57	- 24.0	1.80
1800	5.76	- 24.0	1.73
2000	6.13	- 24.0	1.63
2200	6.47	- 24.0	1.54
2500	6.97	- 23.5	1.42
2700	7.30	- 23.5	1.36
3000	7.78	-	1.29

Connectors

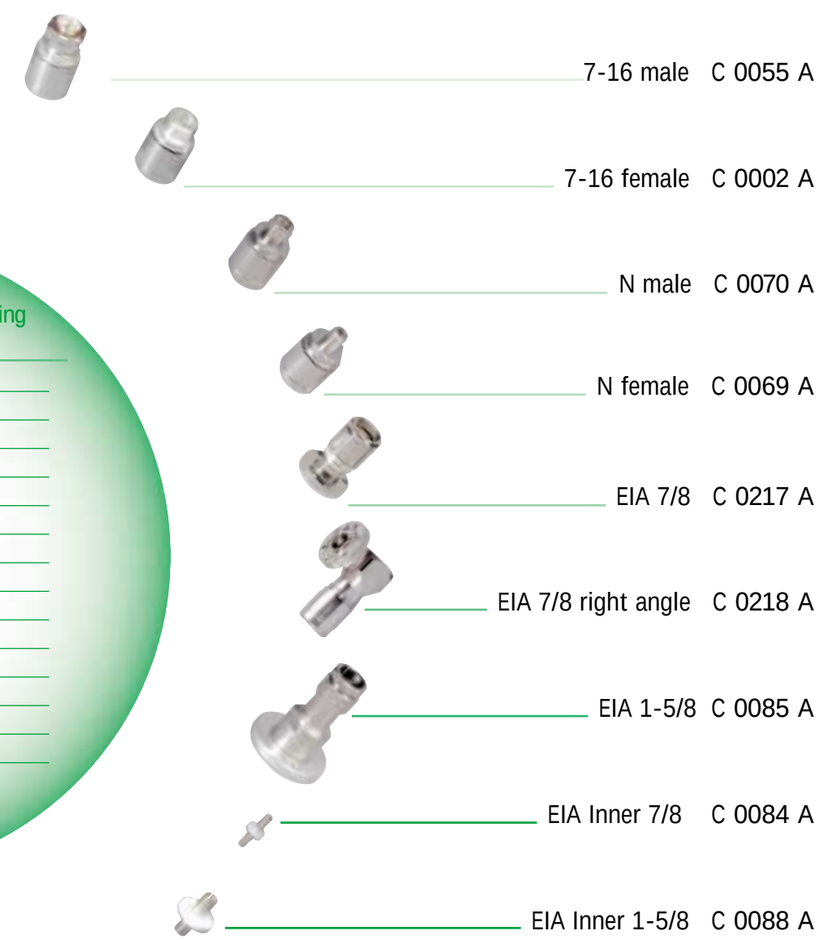

7-16 male C 0055 A
7-16 female C 0002 A
N male C 0070 A
N female C 0069 A
EIA 7/8 C 0217 A
EIA 7/8 right angle C 0218 A
EIA 1-5/8 C 0085 A
EIA Inner 7/8 C 0084 A
EIA Inner 1-5/8 C 0088 A

Hangers and hoisting grips

C 0200 A
C 0262 A
C 0318 A
C 0112 A
C 0160 A
C 0113 A
C 0161 A

Grounding kits

C 0272 A
C 0272 S

Preparation tools

C 0365 A
C 0314 A
C 0009 A

See page 44-51 for details of accessories

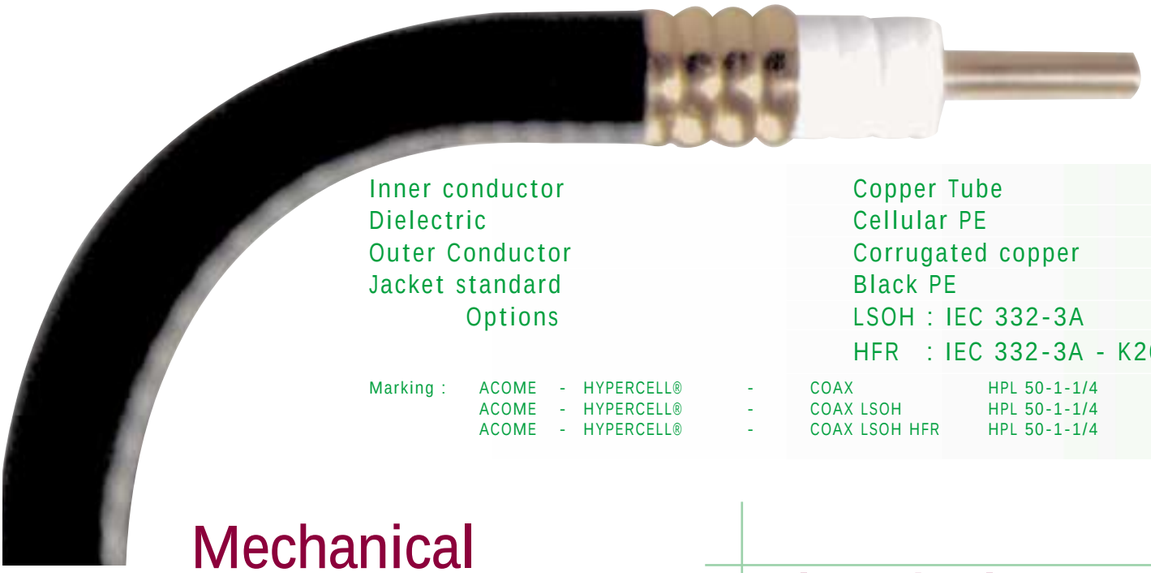

HPL50-1-1/4 F

Inner conductor	Copper Tube	ø	13.00	±	0.10 mm	
Dielectric	Cellular PE	ø	32.00	±	0.20 mm	
Outer Conductor	Corrugated copper	ø	35.70	±	0.30 mm	
Jacket standard	Black PE	ø	39.50	±	0.50 mm	M 2937 Z
Options	LSOH : IEC 332-3A	ø	39.50	±	0.50 mm	M 2938 Z
	HFR : IEC 332-3A - K26	ø	39.50	±	0.50 mm	M 5358 Z / R

Marking :	ACOME - HYPERCELL®	-	COAX	HPL 50-1-1/4	-	Flexible	-	M 2937	-	lot : year / week - meter
	ACOME - HYPERCELL®	-	COAX LSOH	HPL 50-1-1/4	-	Flexible	-	M 2938	-	lot : year / week - meter
	ACOME - HYPERCELL®	-	COAX LSOH HFR	HPL 50-1-1/4	-	Flexible	-	M 5358	-	lot : year / week - meter

Flexible

Mechanical characteristics

Cable weight (kg/m) (PE) (LSOH)	0.940	1.070
Minimum bending radius (mm)	200	
Multiple bending radius (mm)	380	
Number of bends	20	
Tensile strength (N)	2500	
Installation temperature (°C)	- 25 / + 60	
Operating temperature (°C)	- 40 / + 85	

Shipping informations

Standard	500 m ± 5%
Gross weight (PE) kg	828 // 970*
Net weight (PE // LSOH-HFR) kg	470 // 535

For sea freight

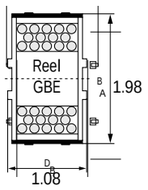

For more detailed information see page 52 - 54

Electrical characteristics

Characteristic impedance (Ω)	50 ± 1
Max. frequency (MHz)	3000
Relative velocity (%)	87
Capacitance (pF/m)	76.5 ± 1.5
Peak power Rating (kW)	181
Screening effectiveness (dB)	>120
Inner conductor DC resistance (Ω/km)	0.76
Outer conductor DC resistance (Ω/km)	0.60
Max. operating voltage (V.RMS)	4300

Attenuation @ 20°C (dB)
Power rating @ 40°C (kW) and inner conductor @100°C
Return Loss max @ 20°C (dB)
Return Loss typical - 23dB (1@3000 MHz)

Intermodulation IM3 (1800 MHz) -155 dBc max.
(-163 dBc typical) . .

FQ (MHz)	Attenuation (dB/100m)	R/L (dB)	Power rating (kW)
30	0.45	-	23.14
80	0.75	-	13.85
150	1.04	-	9.88
450	1.87	- 26.5	5.48
900	2.78	- 26.5	3.71
960	2.88	- 26.5	3.59
1000	2.96	- 26.5	3.49
1500	3.75	-	2.75
1700	4.04	- 24.0	2.55
1800	4.18	- 24.0	2.47
2000	4.45	- 24.0	2.31
2200	4.70	- 24.0	2.17
2500	5.05	- 23.5	2.00
2700	5.37	- 23.5	1.91
3000	5.70	-	1.78

Connectors

7-16 male	C 0049 C
7-16 female	C 0003 C
N male	C 0058 C
N female	C 0057 C
EIA 7/8	C 0219 C
EIA 1-5/8	C 0086 C
Inner 7/8	C 0084 A
Inner 1-5/8	C 0088 A

Hangers and hoisting grips

C 0202 A

C 0317 A

C 0263 A

C 0115 A
C 0163 A

C 0116 A
C 0164 A

Grounding kits

C 0273 A

C 0273 S

Preparation tools

C 0315 A

C 0352 A

C 0010 A

See page 44-51 for details of accessories

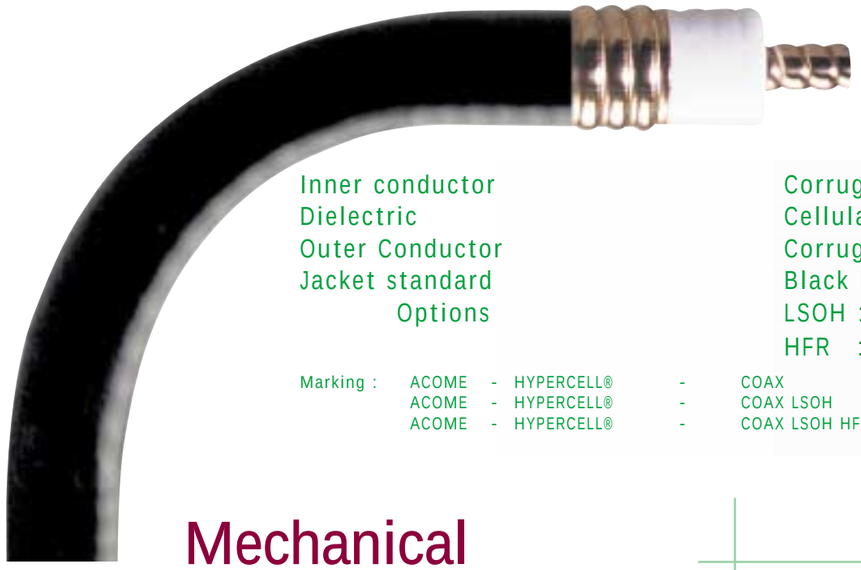

HPL50-1-5/8 F

Inner conductor	Corrugated copper tube	ø	17.30	±	0.20 mm
Dielectric	Cellular PE	ø	42.00	±	0.20 mm
Outer Conductor	Corrugated copper	ø	46.20	±	0.30 mm
Jacket standard	Black PE	ø	50.00	±	0.50 mm — M 2939 Z
Options	LSOH : IEC 332-3A	ø	50.00	±	0.50 mm — M 2940 Z
	HFR : IEC 332-3A - K26	ø	50.00	±	0.50 mm — M 5359 Z / R

Marking :	ACOME	-	HYPERCELL®	-	COAX	HPL 50-1-5/8	-	Flexible	-	M 2939	-	lot : year / week - meter
	ACOME	-	HYPERCELL®	-	COAX LSOH	HPL 50-1-5/8	-	Flexible	-	M 2940	-	lot : year / week - meter
	ACOME	-	HYPERCELL®	-	COAX LSOH HFR	HPL 50-1-5/8	-	Flexible	-	M 5359	-	lot : year / week - meter

Flexible

Mechanical characteristics

Cable weight (kg/m) (PE) (LSOH)	1.448	1.600
Minimum bending radius (mm)	300	
Multiple bending radius (mm)	500	
Number of bends	20	
Tensile strength (N)	2400	
Installation temperature (°C)	- 25 / + 60	
Operating temperature (°C)	- 40 / + 85	

Shipping informations

Standard	500 m ± 5%
Gross weight (PE) kg	1226 // 1391*
Net weight (PE // LSOH-HFR) kg	724 // 800

*For sea freight

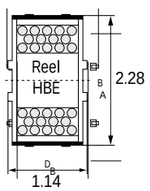

For more detailed information see page 52 - 54

Electrical characteristics

Characteristic impedance (Ω)	50 ± 1
Max. frequency (MHz)	2500
Relative velocity (%)	87
Capacitance (pF/m)	77.5 ± 1.5
Peak power Rating (kW)	306
Screening effectiveness (dB)	>120
Inner conductor DC resistance (Ω/km)	0.70
Outer conductor DC resistance (Ω/km)	0.40
Max. operating voltage (V.RMS)	5400

Attenuation @ 20°C (dB)

Power rating @ 40°C (kW) and inner conductor @100°C

Return Loss max @ 20°C (dB)

Return Loss typical - 23dB (1@3000 MHz)

Intermodulation IM3 (1800 MHz) -155 dBc max. (-163 dBc typical)

FQ (MHz)	Attenuation (dB/100m)	R/L (dB)	Power rating (kW)
30	0.35	-	29.64
80	0.59	-	17.60
150	0.84	-	12.60
450	1.55	-26.5	6.85
900	2.32	- 26.5	4.58
960	2.41	- 26.5	4.36
1000	2.47	- 26.5	4.30
1500	3.17	-	3.36
1700	3.43	- 24.0	3.10
1800	3.56	- 24.0	3.00
2000	3.80	- 24.0	2.81
2200	4.04	- 24.0	2.63
2500	4.39	-	2.42
2700	-	-	-
3000	-	-	-

Connectors

7-16 male	C 0054 C
7-16 female	C 0004 C
N male	C 0068 C
N female	C 0067 C
EIA 7/8	C 0220 C
EIA 1 5/8	C 0087 C
Inner 7/8	C 0084 A
Inner 1-5/8	C 0088 A

Hangers and hoisting grips

C 0203 A
C 0321 A
(open with lace)

C 0264 C

C 0317 A

C 0118 A
C 0166 A

C 0119 A
C 0167 A

Grounding kits

C 0274 A

C 0274 S

Preparation tools

C 0316 A

C 0353 A

C 0011 A

See page 44-51 for details of accessories

The SuperFlexible cable range are designed to be used as jumpers between feeders and antennas and equipment or between equipment when high flexibility is required in tight wirings space.
They are manufactured with a helically corrugated outer conductor, allowing very tight bends without degradation of electrical performances.
As the outer conductor is made of corrugated solid copper, it offers continuous EMI/RFI shielding.
The black polyethylene jacket is fully waterproof and ultraviolet resistant, allowing long term operation in outdoor applications.
Other jacket material is available for fire retardancy in indoor applications.
A full range of connectors and accessories ensures the complete integrity of the feeder line for long life operation.

SuperFlexible

Cable

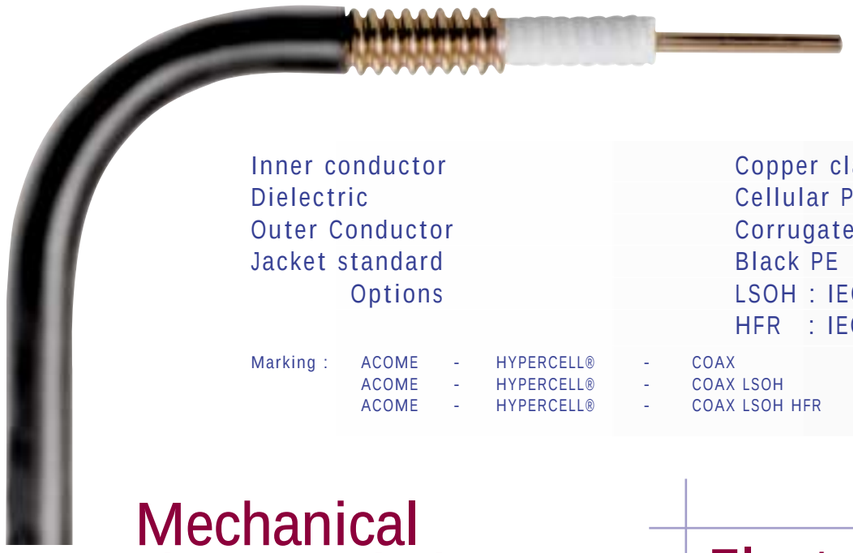

HPL50-1/4 SF

SuperFlexible

Inner conductor	Copper clad aluminum wire	ø	1.90	±	0.05 mm
Dielectric	Cellular PE	ø	4.40	±	0.20 mm
Outer Conductor	Corrugated copper	ø	6.40	±	0.20 mm
Jacket standard	Black PE	ø	7.70	±	0.20 mm — M 2929 Z
Options	LSOH : IEC 332-3A	ø	7.70	±	0.20 mm — M 2931 Z
	HFR : IEC 332-3A / UL1666 / K26	ø	7.70	±	0.20 mm — M 5302 Z / R

Marking :	ACOME	-	HYPERCELL®	-	COAX	HPL 50-1/4 SF	-	SuperFlexible	-	M 2929	-	lot : year / week - meter
	ACOME	-	HYPERCELL®	-	COAX LSOH	HPL 50-1/4 SF	-	SuperFlexible	-	M 2931	-	lot : year / week - meter
	ACOME	-	HYPERCELL®	-	COAX LSOH HFR	HPL 50-1/4 SF	-	SuperFlexible	-	M 5302	-	lot : year / week - meter

Mechanical characteristics

Cable weight (kg/m) (PE) (LSOH)	0.100	0.109
Minimum bending radius (mm)	25	
Multiple bending radius (mm)	45	
Number of bends	20	
Bending moment (N.m)	2.5	
Tensile strength (N)	500	
Installation temperature (°C)	- 25 / + 60	
Operating temperature (°C)	- 40 / + 85	

Electrical characteristics

Characteristic impedance (Ω)	50 ± 1
Max. frequency (MHz)	18000
Relative velocity (%)	82
Capacitance (pF/m)	82 ± 1.5
Peak power Rating (kW)	3.94
Screening effectiveness (dB)	>120
Inner conductor DC resistance (Ω/km)	≤ 6.3
Outer conductor DC resistance (Ω/km)	≤ 5.6
Max. operating voltage (V.RMS)	600

Attenuation @ 20°C (dB)
Power rating @ 40°C (kW) and inner conductor @100°C
Return Loss max @ 20°C (dB)
Return Loss typical - 23dB (1@3000 MHz)

Intermodulation IM3 (1800 MHz) -155 dBc max.
(-163 dBc typical)

FQ (MHz)	Attenuation (dB/100m)	R/L (dB) max.	Power rating (kW)
30	3.16	-	1.78
80	5.23	-	1.08
150	7.19	-	0.78
450	12.73	- 26.5	0.45
900	18.44	- 26.5	0.31
960	19.13	- 26.5	0.30
1000	19.53	- 26.5	0.29
1500	24.34	-	0.24
1700	26.11	- 24.0	0.22
1800	26.93	- 24.0	0.21
2000	28.52	- 24.0	0.20
2200	30.09	- 24.0	0.19
2500	32.30	- 23.5	0.18
2700	33.71	- 23.5	0.17
3000	35.76	-	0.16

Shipping informations

Standard	500 m ± 5%
Gross weight (PE) kg	70.00 // 81.00*
Net weight (PE // LSOH-HFR) kg	50.00 // 54.50

For sea freight

For more detailed information see page 53 - 54

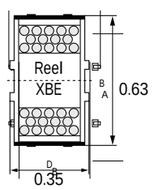

Connectors

N male C 0036 A

N male right angle C 0037 A

N female C 0038 A

Preparation tools

C 0233 A

See page 44-51 for details of accessories

HPL50-3/8 SF

SuperFlexible

Inner conductor	Copper clad aluminum wire	ø	2.80	±	0.05 mm	
Dielectric	Cellular PE	ø	6.90	±	0.20 mm	
Outer Conductor	Corrugated copper	ø	9.60	±	0.20 mm	
Jacket standard	Black PE	ø	10.80	±	0.20 mm	M 2933 Z
Options	LSOH : IEC 332-3A	ø	10.80	±	0.20 mm	M 2935 Z
	HFR : IEC 332-3A / UL1666 / K26	ø	10.80	±	0.20 mm	M 5306 Z / R

Marking :	ACOME	- HYPERCELL®	-	COAX	HPL 50-3/8 SF	-	SuperFlexible	-	M 2933	-	lot : year / week - meter
	ACOME	- HYPERCELL®	-	COAX LSOH	HPL 50-3/8 SF	-	SuperFlexible	-	M 2935	-	lot : year / week - meter
	ACOME	- HYPERCELL®	-	COAX LSOH HFR	HPL 50-3/8 SF	-	SuperFlexible	-	M 5306	-	lot : year / week - meter

Mechanical characteristics

Cable weight (kg/m) (PE) (LSOH)	0.163	0.176
Minimum bending radius (mm)	25	
Multiple bending radius (mm)	45	
Number of bends	20	
Bending moment (N.m)	3.4	
Tensile strength (N)	500	
Installation temperature (°C)	- 25 / + 60	
Operating temperature (°C)	- 40 / + 85	

Electrical characteristics

Characteristic impedance (Ω)	50 ± 1
Max. frequency (MHz)	12.000
Relative velocity (%)	83
Capacitance (pF/m)	80 ± 1.5
Peak power Rating (kW)	8.6
Screening effectiveness (dB)	>120
Inner conductor DC resistance (Ω/km)	2.90
Outer conductor DC resistance (Ω/km)	2.75
Max. operating voltage (V.RMS)	900

Attenuation @ 20°C (dB)
Power rating @ 40°C (kW) and inner conductor @100°C
Return Loss max @ 20°C (dB)
Return Loss typical - 23dB (1@3000 MHz)

FQ (MHz)	Attenuation (dB/100m)	R/L (dB) max.	Power rating (kW)
30	2.17	-	3.44
80	3.57	-	2.03
150	4.93	-	1.47
450	8.73	- 26,5	0.84
900	12.60	- 26.5	0.58
960	13.05	- 26.5	0.56
1000	13.34	- 26.5	0.54
1500	16.61	-	0.43
1700	17.78	- 24.0	0.41
1800	18.35	- 24.0	0.39
2000	19.45	- 24.0	0.37
2200	20.49	- 24.0	0.35
2500	21.99	- 23.5	0.32
2700	22.95	- 23.5	0.31
3000	24.34	-	0.29

Intermodulation IM3 (1800 MHz) -155 dBc max.
(-163 dBc typical)

Shipping informations

Standard	500 m ± 5%
Gross weight (PE) kg	110.50 // 126.50*
Net weight (PE // LSOH-HFR) kg	81.50 // 88.00

*For sea freight

For more detailed information see page 53 - 54

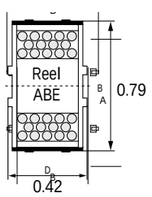

Connectors

7-16 male C 0033 A
7-16 male right angle C 0034 A

7-16 female C 0035 A

N male C 0039 A

N male right angle C 0040 A

N female C 0041 A
EIA 7/8 C 0227 A
7/8 inner C 0084 A

Preparation tools

C 0234 A

See page 44-51 for details of accessories

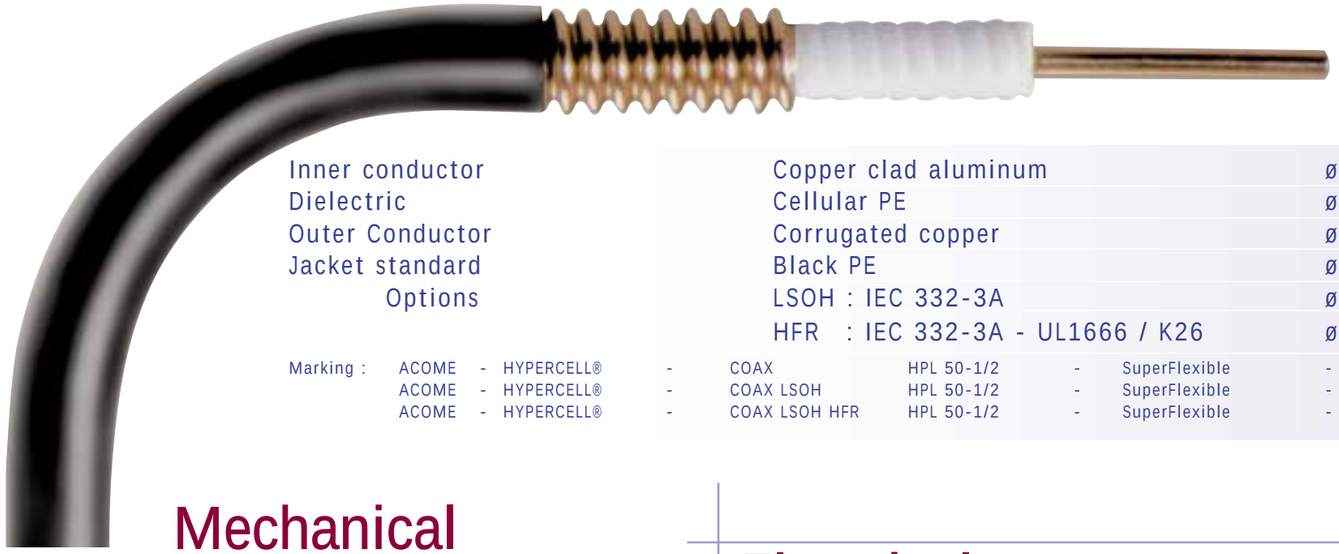

HPL50-1/2 SF

SuperFlexible

Inner conductor	Copper clad aluminum	ø	3.60	±	0.05 mm
Dielectric	Cellular PE	ø	8.70	±	0.20 mm
Outer Conductor	Corrugated copper	ø	12.10	±	0.15 mm
Jacket standard	Black PE	ø	13.40	±	0.20 mm — M 2839 Z
Options	LSOH : IEC 332-3A	ø	13.40	±	0.20 mm — M 2830 Z
	HFR : IEC 332-3A - UL1666 / K26	ø	13.40	±	0.20 mm — M 5308 Z / R

Marking :	ACOME	-	HYPERCELL®	-	COAX	HPL 50-1/2	-	SuperFlexible	-	M 2839	-	lot : year / week - meter
	ACOME	-	HYPERCELL®	-	COAX LSOH	HPL 50-1/2	-	SuperFlexible	-	M 2830	-	lot : year / week - meter
	ACOME	-	HYPERCELL®	-	COAX LSOH HFR	HPL 50-1/2	-	SuperFlexible	-	M 5308	-	lot : year / week - meter

Mechanical characteristics

Cable weight (kg/m) (PE) (LSOH)	0.227	0.240
Minimum bending radius (mm)	25	
Multiple bending radius (mm)	50	
Number of bends	20	
Bending moment (N.m)	4.8	
Tensile strength (N)	700	
Installation temperature (°C)	- 25 / + 60	
Operating temperature (°C)	- 40 / + 85	

Electrical characteristics

Characteristic impedance (Ω)	50 ± 1
Max. frequency (MHz)	10.000
Relative velocity (%)	85
Capacitance (pF/m)	78.5 ± 1.5
Peak power Rating (kW)	16
Screening effectiveness (dB)	>120
Inner conductor DC resistance (Ω/km)	2.90
Outer conductor DC resistance (Ω/km)	2.80
Max. operating voltage (V.RMS)	1270

Attenuation @ 20°C (dB)
Power rating @ 40°C (kW)
and inner conductor @100°C
Return Loss max @ 20°C (dB)
Return Loss typical - 23dB (1@3000 MHz)

FQ (MHz)	Attenuation (dB/100m)	R/L (dB)	Power rating (kW)
30	1.77	-	4.85
80	2.92	-	2.90
150	4.03	-	2.05
450	7.15	- 26.5	1.18
900	10.35	- 26.5	0.82
960	10.71	- 26.5	0.80
1000	10.95	- 26.5	0.78
1500	13.65	-	0.61
1700	14.62	- 24.0	0.58
1800	15.09	- 24.0	0.55
2000	16.00	- 24.0	0.52
2200	16.87	- 24.0	0.50
2500	18.12	- 23.5	0.47
2700	18.92	- 23.5	0.45
3000	20.08	-	0.42

Intermodulation IM3 (1800 MHz) -155 dBc max.
(-163 dBc typical)

Shipping informations

Standard	500 m ± 5%
Gross weight (PE) kg	167.50 // 198.50*
Net weight (PE // LSOH-HFR) kg	113.50 // 120.00

*For sea freight

For more detailed information see page 53 - 54

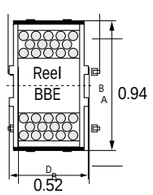

Hoisting grips

C 0313 A

Connectors

7-16 male	C 0005 A
7-16 male right angle	C 0031 A
7-16 female	C 0032 A
N male	C 0042 A
N male right angle	C 0043 A
N female	C 0044 A
EIA 7/8	C 0228 A
7/8 EIA inner	C 0084 A

Preparation tools

C 0007 A

See page 44-51 for details of accessories

The HYPERCELL® cable of the ExtraFlexible serie are normally used in or between the racks of radio equipments or between the radio equipments inside the technical building.
The cable core is made of a low loss close cells polyethylene dielectric which is extruded around a copper or copper-clad aluminium wire.

The core is surrounded with a overlapping aluminium (1/16" & 1/4") or copper (3/8") tape, which is covered with a tined copper or copper braid. This cable architecture allows a very high flexibility with very tight bending radius and guarantee a shielding effectiveness (EMI/RFI) better than 85 dB.

Extra-Flexible

Cable

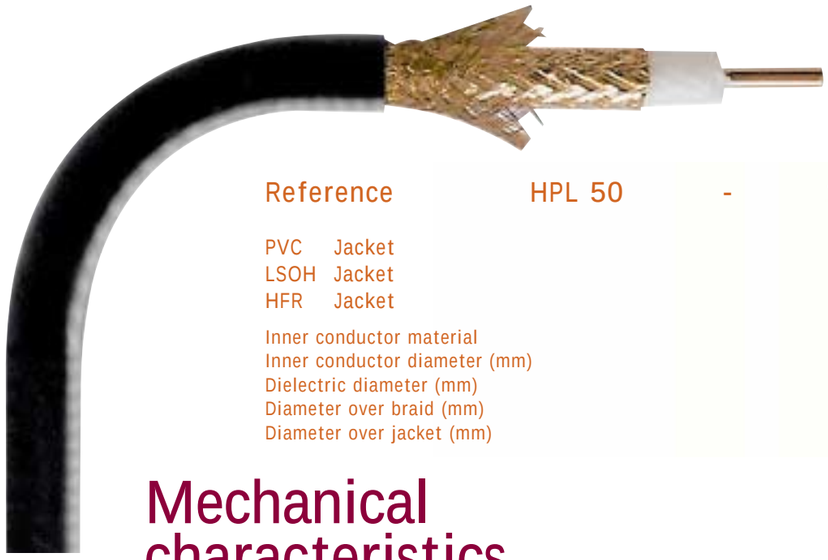

HPL50- 1/16XF, 1/4XF & 3/8XF

Reference	HPL 50 -	1/16 XF	1/4 XF	3/8 XF
PVC Jacket		M5330Z	M5300Z	M5312Z
LSOH Jacket		M5360Z	M5361Z	M5362Z
HFR Jacket		M5331Z	M5332Z	M5333Z
Inner conductor material		Cu/wire	Cu/wire	Al/Cu wire
Inner conductor diameter (mm)		0.50 ± 0.01	1.75 ± 0.05	2.76 ± 0.03
Dielectric diameter (mm)		1.52 ± 0.08	4.80 ± 0.10	7.30 ± 0.20
Diameter over braid (mm)		2.15	5.60	8.00
Diameter over jacket (mm)		2.80 ± 0.13	6.85 ± 0.15	10.10 ± 0.30

ExtraFlexible

Mechanical characteristics

REFERENCES	1/16 XF	1/4 XF	3/8 XF
Cable weight (kg/m)	0.013	0.065	0.106
Minimum bending radius (mm)	15	20	25
Multiple bending radius (mm)	30	45	50
Tensile strength (N)	12	150	400
Installation temperature (°C):			
PVC	- 10 / + 60	- 10 / + 60	- 10 / + 60
LSOH/HFR	- 20 / + 60	- 20 / + 60	- 20 / + 60
Operating temperature (°C):			
PVC	- 15 / + 70	- 15 / + 70	- 15 / + 70
LSOH/HFR	- 40 / + 85	- 40 / + 85	- 40 / + 85

Shipping informations

	1/16 XF	1/4 XF	3/8 XF
Standard length (± 5%)	1000	1000	500
Real type	KCPA	ACPA	ACPA
Gross weight (kg):			
PVC	18.5	78	66
LSOH/HFR	21.5	82	68
Net weight (kg):			
PVC	13	65	53
LSOH/HFR	15	69	55

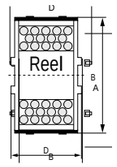

For detailed information see page 53-54

Connectors

SMA male	1/4	XF	C 0083 A
N male	1/4	XF	C 0288 A
N male	3/8	XF	C 0045 A
7-16 male	3/8	XF	C 0046 A
SMA male	1/16	XF	C 0080 A
SMA female	1/16	XF	C 0081 A
SMA male right angle	1/16	XF	C 0082 A

SMA

N

Electrical characteristics

REFERENCES	1/16 XF	1/4 XF	3/8 XF
Characteristic impedance (Ω)	50 ± 1.5	50 ± 1.5	50 ± 1.5
Max. frequency (GHz)	18	15	12
Relative velocity (%)	79	84	85
Capacitance (pF/m)	84	79	78
Peak power Rating (kW)	0.3	3.6	8.4
Screening effectiveness (dB)	>85	>85	>85
Inner conductor DC resistance (Ω/km)	90	7.2	4.75
Outer conductor DC resistance (Ω/km)	70	10.5	4.60
Max. operating Voltage (V.RMS)	170	600	900

Attenuation @ 20°C (dB)

Power rating @ 40°C and inner conductor @100°C (kW)

Return Loss max @ 20°C (dB)

	1/16 XF			1/4 XF			3/8 XF		
FQ (MHz)	Attenuation (dB/100m)	R/L (dB)	Power rating (kW)	Attenuation (dB/100m)	R/L (dB)	Power rating (kW)	Attenuation (dB/100m)	R/L (dB)	Power rating (kW)
30	11.00	- 26.5	0.340	4.32	- 26.5	1.845	2.05	- 26.5	3.530
100	20.00	- 26.5	0.170	6.94	- 26.5	1.095	3.80	- 26.5	1.910
150	25.27	- 26.5	0.140	8.25	- 26.5	0.905	4.70	- 26.5	1.570
450	44.00	- 26.5	0.086	14.29	- 26.5	0.560	8.40	- 26.5	0.895
900	62.00	- 26.5	0.061	20.90	- 26.5	0.410	12.25	- 26.5	0.624
1000	66.00	- 26.5	0.058	21.83	- 26.5	0.385	13.00	- 26.5	0.590
1500	81.00	- 21.0	0.047	27.13	- 21.0	0.312	16.35	- 21.0	0.477
1800	89.00	- 21.0	0.043	29.60	- 21.0	0.283	18.20	- 21.0	0.433
2000	94.00	- 21.0	0.041	31.59	- 21.0	0.265	19.30	- 21.0	0.410
2300	101.00	- 18.0	0.038	34.09	- 18.0	0.246	20.97	- 18.0	0.379
2500	105.00	- 18.0	0.036	35.70	- 18.0	0.234	22.00	- 18.0	0.362
3500	125.00	- 18.0	0.031	43.00	- 18.0	0.194	26.82	- 18.0	0.299
		*			*			*	

*R/L max measured on one meter cable assembly

Grounding kits

C 0270 A
(3/8 XF)

Jumpers are commonly used to connect antennas to the feeders and feeders to the transmission equipment.
Their flexibility avoids the mechanical force that would otherwise be imposed on equipment and antenna connectors. They allow an easy adjustment of antennas during installation or during network optimisation.
Made from Flexible (F) or SuperFlexible (SF) HYPERCELL® cables, they are provided with factory fitted over-moulded type N and DIN7-16 connectors. If assembled with Flexible cables, linear attenuation takes precedence over bending radius.

Jumpers & Cable assemblies

HYPERCELL®

Jumpers & cable assemblies

Jumpers

There are commonly used to connect antennas to the feeders and feeders to the transmission equipment.
Their flexibility avoids the mechanical force that would otherwise be imposed on equipment and antenna connectors. They allow easy an adjustment of antennas during installation or during network optimisation.
Made from Flexible (F) or SuperFlexible (SF) HYPERCELL® cables, they are provided with factory fitted over-moulded type N and DIN7-16 connectors. If assembled with Flexible cables, linear attenuation takes precedence over bending radius.
Jumpers are available in standard length of 1.0m, 1.5m, 2.0m, 2.5m, 3.0m. However, any specific length or combination of connectors can be manufactured on request.
The connectors that equip the jumpers provide 100% solder connection of both inner and outer conductor of the cable. After assembly, they are over moulded, using exactly the same PE material than the cable jacket for perfect bonding, therefore providing following advantages:

- High torsion and pull-off resistance.
- Low and stable IM3 intermodulation level using the swept frequency method up to 1800MHz (2 carriers @ +43dBm) Typically - 163dBc (-155dBc minimum)
- Controlled Return loss (VSWR)
- Waterproofing level IP67- IP68 (3 meters/3 hours)

Jumper cables being for indoor or outdoor application are guaranteed to withstand very severe environmental conditions.

Reference of jumpers and assembly

Example : Jumper, 1.50m long, cable HPL50-1/2SF standard fitted with one connector DIN 7-16 male and one connector N male right angle.

J S 0 1 2 P - D M N C 0 1 5 0 ■

❶ ❷ ❸ ❹ ❺ ❻ ❼

❶ Type
J = Jumper

❷ Cable serie
F = Flexible, S = SuperFlexible

❸ Cable size
012 = 1/2"

❹ Cable jacket
P = Pe (Polyethylene)

❺ Connectors serie and interface
D = DIN 7-16, N = N, M = male, F = female, C = male right angle

❻ Standard length in cm: 1.00 m, 1.50 m, 2.00 m, 2.50 m, 3.00 m (other length on request)

❼ Index

HYPERCELL®

Jumpers & cable assemblies

Cable assembly

Cable assemblies are built on demand for any, physical or electrical length from standard connectors which can be fitted either in house or in the field on any size of Flexible, SuperFlexible (SF) or ExtraFlexible (XF) HYPERCELL® cables with PE, LSOH or HFR jacket. Weatherproofing is ensured when required with thermoshrink sleeves.

Jumpers' characteristics

	HPL50	1/2 F	1/2 SF
Impedance Ω		50±1	50±1
Operating frequency		DC to 3GHz	DC to 3GHz
Velocity		88%	85%
R.L (VSWR) max (typical) @ 20°C (1)	0 to 1000 MHz	32 (34)	32 (34)
	1000 to 2200 MHz	30 (32)	30 (32)
	2200 to 3000 MHz	26 (28)	26 (28)
Attenuation for 1 meter cable +2 straight connectors @ 20°C (add 0.05dB for each elbow connector)	450 MHz	0.15	0.18
	960 MHz	0.17	0.23
	1800 MHz	0.20	0.31
	2200 MHz	0.25	0.38
	2700 MHz	0.35	0.50
3° order intermodulation level @ 1880MHz (2 carriers at+43dBm)	(dBc) Typical	-163	-163
	(dBc) Minimum	-155	-155
Minimum bending radius (mm)		70	25
Operating temperature (°C)		- 40 to +70	- 40 to +70
Waterproof index		IP67 / IP68	IP67 / IP68

(1) For straight connectors

Cable assemblies can be manufactured on demand for any physical or electrical length, utilizing Flexible, SuperFlexible or ExtraFlexible cables jacketed with PE, LSOH or HFR jacket.
In this case, standard connectors are used and weatherproofing is ensured with thermoshrink sleeves.

HYPERCELL®

Connectors & accessories

ACOME has developed or selected a full range of accessories recognized by the operators, the integrators and the installers for their fast installation, their reliability and durability.

HYPERCELL® cables can be fitted, and have been tested, with connectors from well knows manufacturers, particularly Huber and Suhner (QUICKFIT®), Teracom and Spinner.

The HYPERCELL® accessories line includes:

- Connectors for Flexible & SuperFlexible Cables
- Cutting and preparation tools
- Grounding kits.
- Weatherproofing kits.
- Hoisting grips.
- Clip hangers and multiple hangers.
- Wall entries and boots

Together HYPERCELL® cables and accessories form and effective transmission line system that will last for years.

HYPERCELL® connectors for Flexible & SuperFlexible Cables

The connectors offered in the HYPERCELL® family have been optimized to perfectly fit each type of cable, therefore granting outstanding mechanical and electrical performances to the feeder line or the cable assembly. The design has been focused on few parts for easy assembly, efficient waterproofing while offering excellent vswr and low intermodulation generation.
In addition, a set of specific tools have been designed for easy and reliable attachment on site.

After preparation of the cable, the cable outer conductor is tighten and blocked on 360° between the cone of the connector body and the flexible rear clamp, resulting in high grade mechanical retention and a perfect electrical continuity and complete shielding.
All inner contacts are captivated, thus avoiding any risk of damage during coupling of male to female connectors.

IP 68 level of waterproofing (3 meters/3 hours) is ensured by O-rings inside the body, and silicon gaskets in the coupling nuts.

Bi-lingual assembly instructions sheets are included in each individual connector bag.

Connector material and plating

Type	N	DIN 7/16	EIA
Inner contact	Gold plated Bronze	Silver plated Bronze	Silver plated bronze
Insulator	PTFE	PTFE	PTFE
Clamping nut	Silver Plated Brass	Silver Plated Brass	Silver Plated Brass
Connector body	Silver Plated Brass	Silver Plated Brass	Silver Plated Brass
Coupling nut	Nickel plated brass	Nickel plated brass	Nickel plated brass

HYPERCELL®

Connectors

N and DIN7-16 connectors characteristics

Applicable standards	Type N	IEC 60 169-16
	Type DIN 7-16	IEC 60 169-4
Impedance (Ohm)		50 +/-2%
Frequency band (GHz)		0 à 3.0
VSWR (R.L. dB) @ 2.7GHz		1.04 (35)
3rd intermodulation products		- 163 dBc typical (2 carriers+43dBm (20w)) @ 1.88GHz
Insertion losses (dB)		0.05dB √f (GHz) (for straight connector)
Contact resistance Inner		N = 1.5mΩ DIN7/16: <1.5mΩ
Outer		N = 0.5mΩ DIN7/16: <0.5mΩ N
Insulation resistance		5000 MΩ
Max peak power (W)		25 kW (DIN 7-16) / 5 kW (N)
Pull-off strength		Limited by cable tensile strength.
Twist-off strength		Limited by cable twist torque.
Waterproofing (CEI 529)		IP 67 / IP 68 (3m/3h)
StorageTemperature		-40°C / +85°C
InstallationTemperature		-15°C / +55°C

In order to garantee the intermodulation characteristics, following torque must be applied on the coupling nut for assembly of connectors: < DIN 7-16 : 25.00 N/m
N : 1.70 N/m

Selection guide of HYPERCELL® connectors

Connectors Cables	N Male	N Female	N R/A	DIN 7-16 Male	DIN 7-16 Female	DIN 7-16 R/A	EIA 7/8	EIA 7/8 R/A	EIA 1-5/8
HPL50-1/4SF	C 0036 A	C 0038 A	C 0037 A						
HPL50-3/8 SF	C 0039 A	C 0041 A	C 0040 A	C 0033 A	C 0035 A	C 0034 A	C 0227 A		
HPL50-1/2 SF	C 0042 A	C 0044 A	C 0043 A	C 0005 A	C 0032 A	C 0031 A	C 0228 A		
HPL50-1/4 F	C 0066 A	C 0056 A	C 0065 A						
HPL50-3/8 F	C 0064 A	C 0062 A	C 0063 A	C 0053 A	C 0051 A	C 0052 A			
HPL50-1/2 F	C 0061 A	C 0059 A	C 0060 A	C 0006 A	C 0001 A	C 0050 A	C 0079 A		
HPL50-5/8 F	C 0208 A	C 0210 A	C 0209 A	C 0211 A	C 0212 A		C 0213 A	C 0214 A	
HPL50-7/8 F	C 0070 A	C 0069 A		C 0055 A	C 0002 A		C 0217 A	C 0218 A	C 0085 A
HPL50-1-1/4 F	C 0058 C	C 0057 C		C 0049 C	C 0003 C		C 0219 C		C 0086 C
HPL50-1-5/8 F	C 0068 C	C 0067 C		C 0054 C	C 0004 C		C 0220 C		C 0087 C
EIA Inner cond.							C 0084 A	C 0084 A	C 0088 A

See page 55 - 56 for corresponding connector technical specification and assembly instructions sheets.

HYPERCELL®

Adaptors

In-serie adaptors

7-16 female	@	7-16 female	C 0093 A
7-16 male	@	7-16 male	C 0257 A
7-16 male elbow	@	7-16 female	C 0096 A
N female	@	N female	C 0094 A
N male	@	N male	C 0095 A
N male elbow	@	N female	C 0097 A

Between serie adaptors

SMA male	@	N femelle	C 0306 A
SMA female	@	N male	C 0349 A
7 /16 female	@	N male	C 0089 A
7/16 female	@	N female	C 0090 A
7/16 male	@	N male	C 0091 A
7/16 male	@	N female	C 0092 A
N female	@	EIA 7/8	C 0106 A

HYPERCELL®

Preparation tools for HYPERCELL® corrugated cables

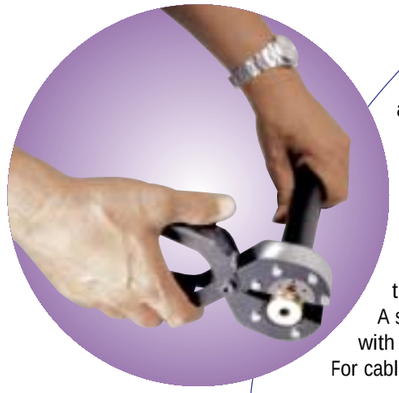

Connectors' interface is the most critical factor affecting transmission line performances.
Cable preparation tools allow easy, fast and reliable assembly of HYPERCELL® connectors on HYPERCELL® foam dielectric corrugated cables.

For cable size 1/4'', 3/8'', 1/2'', Flexible and SuperFlexible, cutting tools have a form of a cylinder with shaped blades allowing to remove simultaneously the dielectric and the outer conductor at the required dimension.
A slot in the cylinder allow to trim the jacket with a simple safety knife. This tool is delivered with a removable handle, and can be used manually or with a standard power drill.
For cable size 5/8'', 7/8'' 1-1/4 and 1-5/8 Flexible, several efficient tools are offered:

A/ Cutting ring: they allow to guide a saw blade at top of a corrugation on one face and cut the jacket on the other face at the required trimming dimension.

B/ Efficient flaring tools are available for HPL50- 7/8F, 1-1/4F & 1-5/8F.

C/ Trimming/flaring tools (to be used with a hacksaw) are now available for the new range of connectors for HPL50, 1-1/4F & 1-5/8F. (Connectors are registered with an index "C").

D/ For HPL50-7/8F, a new precision cutting tool cuts the cable at top of corrugation without any debris or copper dust, and trims the jacket at the precise dimension. Standard interchangeable blades are commonly found in regular hardware store.
Blade for copper: Reference MARTOR ALLFIT n°52
Blade for Jacket: Reference MARTOR FIX n°78.

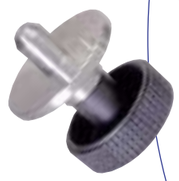

	Cutting tool	Saw guide	Flaring tool	Saw/ Flare tool
HPL50-1/4 F	C 0029 A			
HPL50-3/8 F	C 0230 A			
HPL50–1/2 F	C 0008 C			
HPL50-5/8 F	C 0231 A	C 0235 A		
HPL50-7/8 F	C 0365 A	C 0009 A	C 0314 A	
HPL50-1-1/4 F		C 0010 A	C 0315 A	C 0352 A
HPL50-1-5/8 F		C 0011 A	C 0316 A	C 0353 A
HPL50-1/4 SF	C 0233 A			
HPL50-3/8 SF	C 0234 A			
HPL50-1/2 SF	C 0007 A			

HYPERCELL®

Grounding kits

ACOME recommends three grounding kits per feeder run. One kit is required at the top, one at the bottom of the run, (plus one at 50 meters interval where applicable) and one at entrance to the equipment shelter.
Grounding kits, which have been specially tailored to each cable size, can be installed very easily and rapidly; once the jacket is stripped at the required dimension, one kit can be installed in less than 3 minutes.
Kits are provided with all hardware necessary to connect the ground wire to the tower ground bar.

For Standard Grounding kits, the stainless steel shell ensures high resistance to corrosion and the rubber gasket guarantee an IP67 waterproofing level. The solid copper contact (resistance < 1mΩ) have been tested according to MIL STD 1757 providing high protection against lightning.

The Compact grounding kits have been tested and present a low contact resistance of $2x10^{-5}$ Ω. They have been tested to wistand 6.000/Volts/150.000 Amps during 50µs.
The cocoon style UV resistant rubber shell once correctly installed will allow an IP 68 waterproofing index (1m/24h) with no need of any additional protection.

Cable	Standard Parallel	Compact	Trimming dims mm		Ground wire length mm	
HPL50-1/4 F & 3/8 XF	C 0270 A		26		830	
HPL50-1/2 F	C 0271 A	C 0271 S	26	44	830	700
HPL50-3/8 F	C 0291 A		26		830	
HPL50-5/8 F	C 0292 A		26		830	
HPL50-7/8 F	C 0272 A	C 0272 S	26	44	830	700
HPL50-1-1/4 F	C 0273 A	C 0273 S	26	44	830	700
HPL50-1-5/8 F	C 0274 A	C 0274 S	30	44	830	700
Assembly Instruction	ANM 0319	ANM 043				

COMPACT

STANDARD

HYPERCELL®

Weatherproofing kits

The weatherproofing kit is recommanded to be used in order to protect connectors and jumpers to antenna interfaces from moisture or water ingress, and to avoid loosening of connectors at jumper interfaces caused by vibrations.

It includes a 3.50 meters long self vulcanizing rubber tape which must be wrapped around the connections, then recovered with a PVC tape to resist at ultra-violet rays.

One single kit C 0244 A allows several protection, depending upon the connectors' interface configuration.

Feeder connector	Cable	Jumper Connector	Number of protection
N or DIN 7-16	1-1/4 ''F & 1-58''F	N or 7-16	3
N or DIN 7-16	7/8'' F	N or 7-16	4
N or DIN 7/16	5/8''F & 1/2'' F	N or 7-16	5
N or DIN 7/16	1/2'' SF	N or 7-16	7

Hoisting grips

Hoisting grips allow to raise the feeder on top of tower with no risk of stress of the cable. They must be used at 50 meters intervals maximum during installation and can provide a permanent cable support. Made of stainless steel for multiple operations, they can be offered with or without laces.

Cable	Grip	Grip with laces.
HPL50- 1/2SF	C 0313 A	
HPL50- 1/2F	C 0199 A	
HPL50- 5/8F	C 0200 A	C 0356 A
HPL50- 7/8F	C 0200 A	C 0356 A
HPL50- 1-1/4F	C 0202 A	C 0320 A
HPL50- 1-5/8F	C 0203 A	C 0321 A

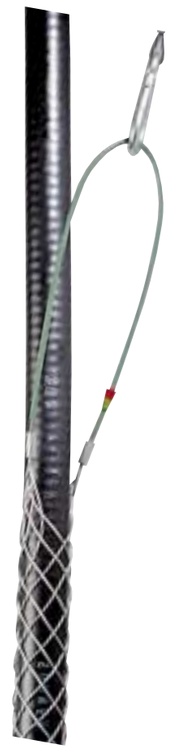

HYPERCELL®

Hangers

Cables hangers

The hangers offered by ACOME are designed for the installation of HYPERCELL® cables from size of 1/4" up to 1-5/8" in severe mechanical and environmental conditions.
These hangers must generally support the cable every meter to the tower, in order to avoid any risk of slipperage or longitudinal deformation due to its own weight, to the wind velocity, gusts and induced turbulences and finally to vibrations of the tower.
In addition, in some area radial ice accumulation will increase the overall loading.
In such case, a reduction in the hanger spacing is necessary.
Two types of hangers are proposed:

Single cable clip hangers

These stainless steel hangers can be rapidly fixed by clipping on to the flat towers members of 2 to 6 mm thickness.
For round tower members, the hangers are simply attached with a stainless steel adaptor clamp.

Cable	Flat member Hanger	Round member Hanger
HPL50–1/2F	C 0265 A	C 0319 A
HPL50-7/8F	C 0262 A	C 0318 A
HPL50–1 1/4F	C 0263 A	C 0317 A
HPL50–1 5/8F	C 0264 A	C 0317 A

Once the hangers in place, the cable is simply snapped in the springy support.

The advised 1.00 meter hanger spacings have been calculated for wind velocity of 160 Km/h and 10 mm of radial ice. Should one of these variable being changed, then the spacing between hangers must be brought back to 0.60m.

Multiple cables hook hangers

HYPERCELL® multiple cable runs hangers can attach two or three cables directly on flat members of 40x40 or on 3.0 to 25mm flat and 8.0 to 25 mm round members.
These hangers are commonly used on crowded towers.
Once in place, cables are tighten in the calibrated shells with no risk of crushing the cable.

Hanger hook and hardware are made of stainless steel AISI 304, and UV resistant shells are made with fiberglass PA.

HYPERCELL®

Hangers & wall entries

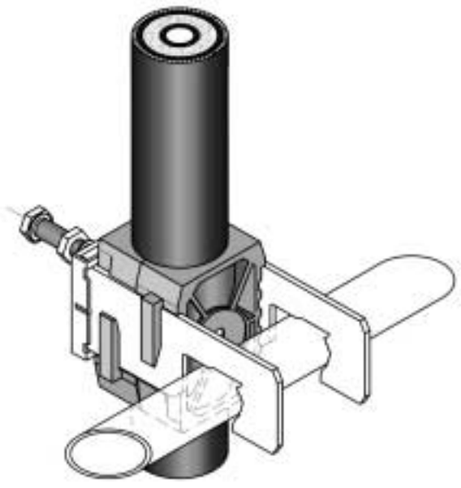

Multiple cable hook hanger references

Type and number of cables		Flat 40x40 RFA	Flat 3/25 mm Round 8/25 mm. RFM
HPL50-3/8F	1		
	2	C 0328 A	
	3		
HPL50-1/2F	1		
	2	C 0109 A	C 0157 A
	3	C 0110 A	C 0158 A
	4		C 0332 A
HPL50-5/8F	1		
	2	C 0329 A	C 0331 A
	3	C 0330 A	
HPL50-7/8F	1		
	2	C 0112 A	C 0160 A
	3	C 0113 A	C 0161 A
HPL50-1-1/4F	1		
	2	C 0115 A	C 0163 A
	3	C 0116 A	C 0164 A
HPL50-1 5/8F	1		
	2	C 0118 A	C 0166 A
	3	C 0119 A	C 0167 A

Other configuration or single cable hook hangers on demand.

Wall entries and cable boots

Monobloc wall entries are weatherproof (IP67) and fire resistant (REI120). They can accomodate several cable size entries and combine multiple cable entry with sectorial rubber cable boots.
The steel entry plate can be fitted with 90 mm round or sectorial boots.

Description		Reference
Single entry plate PMS 0	*	C0333A
Dual entry plate PMS 2	*	C0334A
Four entry plate PMS 2x2	*	C0335A
Six entry plate PMS 2x3	*	C0336A
Blind boot GT17		C0345A
Blind boot GT 28		C0346A
Blind boot GST90		C0341A
Sectorial boot GSR 1x1/4"		C0337A
Sectorial boot GSR 1x1/2"		C0338A
Sectorial boot GSR 1x7/8"		C0339A
Sectorial boot GSR 2x1/2"		C0340A
Round boot GR 1x1-1/4"		C0342A
Round boot GR 1x1-5/8"		C0343A
Round boot GR 4x7/8"		C0344A

** See installation instruction ANM 0047 for dimensions.*

HYPERCELL®

Cable Packing & Shipping Informations

Domestic / Export PACKING

FLEXIBLE cable serie

Type	Cable: Diam. (mm) Weight (kg/m)	Standard Length			
1/4" F M 2930 Z M 2932 Z M 5309 Z	9.50 ± 0.30 0.130 0.145 0.145	500 m ABE	Length ≤ 200 m : Coil - weight ≤ 29 kg ø inner : 420 mm Width : 120 mm ø outer : 640 mm Protection : Cardboard box 700x700x125 (mm)	200 m < Length ≤ 350m Reel XCPA Protection with NOLCO-FLEX	Length > 350m Reel ABE Protection with NOLCO-FLEX
3/8" F M 2934 Z M 2936 Z M 5310 Z	11.50 ± 0.30 0.185 0.204 0.204	500 m ABE	Length ≤ 100 m : Coil - weight ≤ 21 kg ø inner : 420 mm Width : 120 mm ø outer : 590 mm Protection : Cardboard box 700x700x125 (mm)	100 m < Length ≤ 250 m Reel XCPA Protection with NOLCO-FLEX	Length > 250m Reel ABE Protection with NOLCO-FLEX
1/2" F M 1473 Z M 2831 Z M 5322 Z	16.0 ± 0.30 0.250 0.276 0.276	500 m CBE	Length ≤ 75 m : Coil - weight ≤ 21 kg ø inner : 750 mm Width : 120 mm ø outer : 970 mm Protection : Cardboard box 1000x1000x125 (mm)	75 m < Length ≤ 350 m Reel BCPA Protection with NOLCO-FLEX	Length > 350m Reel CBE Protection with NOLCO-FLEX
5/8"F M 5038 Z M 5039 Z M 5357 Z	22.50 ± 0.30 0.448 0.500 0.500	500 m DBE	Length ≤ 50 m : Coil - weight ≤ 25 kg ø inner : 750 mm Width : 120 mm ø outer : 970 mm Protection : Cardboard box 1000x1000x125 (mm)	50 m < Length ≤ 200 m Reel BCFO Protection with NOLCO-FLEX	Length > 200 m Reel DBE Protection with NOLCO-FLEX
7/8"F M 1474 Z M 2832 Z M 5323 Z	27.75 ± 0.25 0.598 0.650 0.650	500 m EBE	Length ≤ 35 m : Coil - weight ≤ 23 kg ø inner : 750 mm Width : 120 mm ø outer : 950 mm Protection : Cardboard box 1000x1000x125	35 m < Length ≤ 350 m Reel DCFO Protection with NOLCO-FLEX	Length > 350 m Reel EBE Protection with NOLCO-FLEX
1-1/4"F M2937 Z M2938 Z M5358 Z	39.50 ± 0.50 0.940 1.070 1.070	500 m GBE	Length ≤ 120 m Reel ECPA Protection with NOLCO-FLEX	120 m < Length ≤ 400 m Reel FBE Protection with NOLCO-FLEX	Length > 400 m Reel GBE Protection with NOLCO-FLEX
1-5/8"F M2939 Z M2940 Z M5359 Z	50.0 ± 0.50 1.448 1.600 1.600	500 m HBE	Length ≤ 80 m Reel ECPA Protection with NOLCO-FLEX	80 m < Length ≤ 400 m Reel GBE Protection with NOLCO-FLEX	Length > 400 m Reel HBE Protection with NOLCO-FLEX

HYPERCELL®

Cable Packing & Shipping Informations

Domestic / Export PACKING

SUPERFLEXIBLE cable serie

Type	Cable: Diam. (mm) Weight (kg/m)	Standard Length			
1/4" SF M 2929 Z M 2931 Z M 5302 Z	7.70 ± 0.20 0.100 0.109 0.109	500 m XBE	Length ≤ 250 m Coil - Weight ≤ 28 kg Inner ø : 220 mm Width : 120 mm Outer ø : 470 mm Protection: cardboard box 520 x 520 x 125 (mm)	Length > 250 m Reel XBE Protection with NOLCO-FLEX	
3/8" SF M 2933 Z M 2935 Z M 5306 Z	10,80 ± 0.20 0.163 0.176 0.176	500 m ABE	Length ≤ 150 m : Coil - Weight ≤ 27 kg ø inner : 420 mm Width : 120 mm ø outer : 640 mm Protection : Cardboard box 700x700x125 (mm)	150 m < Length ≤ 300m Reel XCPA Protection with NOLCO-FLEX	Length > 300 m REEL ABE Protection with NOLCO-FLEX
1/2" SF M 2839 Z M 2830 Z M 5308 Z	13,40 ± 0.20 0.227 0.240 0.240	500 m BBE	Length ≤ 100 m : Coil - Weight ≤ 24 kg ø inner : 420 mm Width : 120 mm ø outer : 650 mm Protection : Cardboard box 700x700x125 (mm)	100 m < Length ≤ 400m Reel ACPA Protection with NOLCO-FLEX	Length > 400 m Reel BBE Protection with NOLCO-FLEX

Domestic / Export PACKING

EXTRAFLEXIBLE cable serie

Type	Cable: Diam. (mm) Weight (kg/m)	Standard Length		
1/16" XF M 5330 Z M 5360 Z M 5331 Z	2.80 ± 0.13 0.013 0.015 0.015	1000 m KCPA	Length: 100 m - Weight: 1.5kg Reel Z	Length: 1000 m Reel KCPA Protection with NOLCO-FLEX
1/4" XF M 5300 Z M 5361 Z M 5332 Z	6.85 ± 0.15 0.065 0.069 0.069	1000 m ACPA	Length: 100 m - Weight: 6.9kg Reel B2	Length: 1000 m Reel ACPA Protection with NOLCO-FLEX
3/8" XF M 5312 Z M 5362 Z M 5333 Z	10.10 ± 0.30 0.106 0.111 0.111	500 m ACPA	Length: 100 m Coil - Weight: 11.1 kg ø Inner : 220 mm Width : 120 mm ø Outer : 470 mm Protection : cardboard box 520 x 520 x 125 (mm)	Length: 500 m Reel ACPA Protection with NOLCO-FLEX

HYPERCELL®

Cable Packing & Shipping Informations

Weight and dimensions of cable reels

	A	B	C	D	E	F
Units	m	m	m	m	kG	kG
Bobines						
B 2	0,27	N/A	0,10	0,195	0.85 *	N/A
Z	0,18	N/A	0,09	0,105	0.19 *	N/A
(without NOLCO-FLEX)						
Reels						
ABE	0,75	0,79	0,35	0,420	29,0	45,0
ACPA	0,75	N/A	0,35	0,395	13,0	N/A
BBE	0,90	0,94	0,45	0,520	54,0	85,0
BCFO	0,88	N/A	0,60	0,650	25,0	N/A
BCPA	0,90	N/A	0,45	0,500	20,0	N/A
CBE	1,05	1,09	0,55	0,520	61,0	100,0
DBE	1,20	1,25	0,65	0,670	92,0	144,0
DCFO	1,20	N/A	0,80	0,650	37,0	N/A
EBE	1,40	1,45	0,80	0,700	138,0	186,0
ECPA	1,50	N/A	1,20	0,645	67,0	N/A
FBE	1,65	1,70	0,96	0,710	210,0	282,0
GBE	1,90	1,98	1,20	1,080	358,0	500,0
HBE	2,20	2,28	1,40	1,140	502,0	667,0
KCPA	0,45	N/A	0,20	0,270	6,5	N/A
XBE	0,60	0,63	0,35	0,350	20,0	31,0
XCPA	0,60	N/A	0,30	0,320	7,0	N/A

A Diameter of flanges (unlagged)
B Diameter of flanges (lagged)
C Diameter of drum
D Overall width
E Gross weight unlagged (with NOLCO-FLEX)
F Gross weight lagged with boards

Test metod:

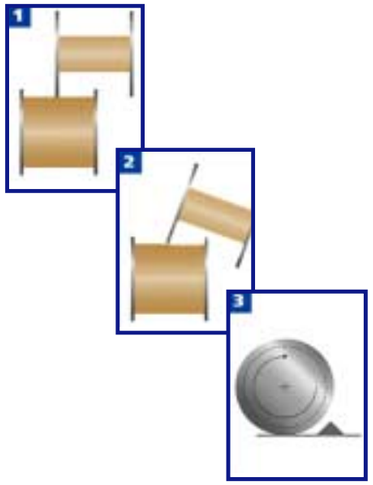

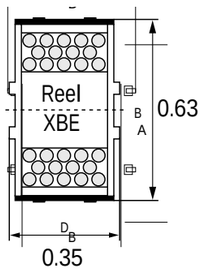

NOLCO-FLEX is a strong, flexible packaging material. It is manufactured from impregnated woodfibre board. Together with the outer laminate, the product becomes a powerful, weatherproof shock absorber.
Wooden lagging is very sensitive to climatic changes. When a batten breaks, its full surface area is open, making the cable beneath very vulnerable. In addition, splintered wood often penetrates the first layers of the cable.

Because of its soft and flexible construction, NOLCO-FLEX can lie directly on the cable. It is also a light material that takes up less space in the warehouse, and is suitable for almost any cable drum, under all conditions.
NOLCO-FLEX has been tested by the German Institute BFSV. Their report provides evidence of its high quality properties, including mechanical protection and water and UV resistance during transport, handling and storage of cable reels.

HYPERCELL®

Product index

Type	Product Description	Product code	Page	AST	ANM
Connector	7-16 female for HPL50-1/2F	C 0001 A	45 - 19	678	264
Connector	7-16 female for HPL50-7/8F	C 0002 A	45 - 23	679	265
Connector	7-16 female for HPL50-1-1/4F (NV)	C 0003 C	45 - 25	684	359
Connector	7-16 female for HPL50-1-5/8F (NV)	C 0004 C	45 - 27	682	308
Connector	7-16 male for HPL50-1/2SF	C 0005 A	45 - 35	669	263
Connector	7-16 male for HPL50-1/2F	C 0006 A	45 - 19	677	264
Connector	7-16 male elbow for HPL50-1/2SF	C 0031 A	45 - 35	704	263
Connector	7-16 female for HPL50-1/2SF	C 0032 A	45 - 36	706	263
Connector	7-16 male for HPL50-3/8SF	C 0033 A	45 - 33		388
Connector	7-16 male elbow for HPL50-3/8SF	C 0034 A	45 - 33		388
Connector	7-16 female for HPL50-3/8SF	C 0035 A	45 - 33		388
Connector	N male for HPL50-1/4SF	C 0036 A	45 - 31		267
Connector	N male elbow for HPL50-1/4SF	C0037 A	45 - 31		267
Connector	N female for HPL50-1/4SF	C0038 A	45 - 31		267
Connector	N male for HPL50-3/8SF	C 0039 A	45 - 33		388
Connector	N male elbow for HPL50-3/8SF	C 0040 A	45 - 33		388
Connector	N female for HPL50-3/8SF	C 0041 A	45 - 33		388
Connector	N male for HPL50-1/2SF	C 0042 A	45 - 35	708	263
Connector	N male elbow for HPL50-1/2SF	C 0043 A	45 - 35	712	263
Connector	N female for HPL50-1/2SF	C 0044 A	45 - 35	711	263
Connector	N male for HPL50- 3/8XF	C 0045 A	39		045
Connector	7-16 male for HPL50-3/8XF	C 0046 A	39		
Connector	7-16 male for HPL50-1-1/4F (NV)	C 0049 C	45 - 25	731	359
Connector	7-16 male elbow for HPL50-1/2F	C 0050 A	45 - 19	707	264
Connector	7-16 female for HPL50-3/8F	C 0051 A	45 - 17		340
Connector	7-16 male elbow for HPL50-3/8F	C 0052 A	45 - 17		340
Connector	7-16 male for HPL50-3/8F	C 0053 A	45 - 17		340
Connector	7-16 male for HPL50-1-5/8F (NV)	C 0054 C	45 - 27	753	308
Connector	7-16 male for HPL50-7/8F	C 0055 A	45 - 23	705	265
Connector	N female for HPL50-1/4F	C 0056 A	45 - 15		351
Connector	N female for HPL50-1-1/4F (NV)	C 0057 C	45 - 25		359
Connector	N male for HPL50-1-1/4F (NV)	C 0058 C	45 - 25		359
Connector	N female for HPL50-1/2F	C 0059 A	45 - 19	714	264
Connector	N male elbow for HPL50-1/2F	C 0060 A	45 - 19		264
Connector	N male for HPL50-1/2F	C 0061 A	45 - 19	709	264
Connector	N female for HPL50-3/8F	C 0062 A	45 - 17		340
Connector	N male elbow for HPL50-3/8F	C 0063 A	45 - 17		340
Connector	N male for HPL50-3/8F	C 0064 A	45 - 17		340
Connector	N male elbow for HPL50-1/4F	C 0065 A	45 - 15		351
Connector	N male for HPL50-1/4F	C 0066 A	45 - 15		351
Connector	N female for HPL50-1-5/8F (NV)	C 0067 C	45 - 27		308
Connector	N male for HPL50-1-5/8F (NV)	C 0068 C	45 - 27		308
Connector	N female for HPL50-7/8F	C 0069 A	45 - 23	715	265
Connector	N male for HPL50-7/8F	C 0070 A	45 - 23	713	265
Connector	EIA 7/8 for HPL50-1/2F	C0079 A	45 - 19		264
Connector	SMA male for HPL50-1/16XF	C 0080 A	39	686	
Connector	SMA female bulkhead for HPL50-1/16XF	C 0081 A	39		
Connector	SMA male elbow for HPL50-1/16XF	C 0082 A	39		

AST : ACOME Technical Specification
ANM : ACOME Assembly Instruction

Type	Product Description	Product code	Page	AST	ANM
Connector	SMA male for HPL50-1/4XF	C 0083 A	39	648	
Connector	Inner connector EIA 7/8	C 0084 A	45		
Connector	EIA 1-5/8 for HPL50-7/8F	C 0085 A	45 - 23		265
Connector	EIA 1-5/8 for HPL50-1-1/4F	C 0086 C	45 - 25		359
Connector	EIA 1-5/8 for HPL50-1-5/8F	C 0087 C	45 - 27		308
Connector	Inner connector EIA 1-5/8	C 0088 A	45		
Connector	Adaptor 7-16 female / N male	C 0089 A	46		
Connector	Adaptor 7-16 female / N female	C 0090 A	46		
Connector	Adaptor 7-16 male / N male	C 0091 A	46		
Connector	Adaptor 7-16 male / N female	C 0092 A	46		
Connector	Adaptor in serie 7-16 female/female	C 0093 A	46		
Connector	Adaptor in-serie N female / female	C 0094 A	46		
Connector	Adaptor in-serie N male / male	C 0095 A	46		
Connector	Adaptor in-serie elbow 7-16 male / female	C 0096 A	46		
Connector	Adaptor in-serie elbow N male / female	C 0097 A	46		
Connector	Adaptor EIA 7/8 / N female	C 0106 A	46		
Connector	N male for HPL50-5/8F	C 0208 A	45 - 21		567
Connector	N male elbow for HPL50-5/8F	C 0209 A	45 - 21		567
Connector	N female for HPL50-5/8F	C 0210 A	45 - 21		567
Connector	7-16 male for HPL50-5/8F	C 0211 A	45 - 21		567
Connector	7-16 female for HPL50-5/8F	C 0212 A	45 - 21		567
Connector	EIA 7/8 for HPL50-5/8F	C 0213 A	45 - 21		567
Connector	EIA 7/8 elbow for HPL50-5/8F	C 0214 A	45 - 21		567
Connector	EIA 7/8 for HPL50-7/8F	C 0217 A	45 - 23		265
Connector	EIA 7/8 elbow for HPL50-7/8F	C 0218 A	45 - 23		265
Connector	EIA 7/8 for HPL50-1-1/4F	C 0219 C	45 - 25		359
Connector	EIA 7/8 for HPL50-1-5/8F	C 0220 C	45 - 27		308
Connector	EIA 7/8 for HPL50-3/8SF	C 0227 A	45 - 33		
Connector	EIA 7/8 for HPL50-1/2SF	C 0228 A	45 - 35		263
Connector	Adaptor in-serie 7-16 male / male	C 0257 A	46		
Connector	N male for HPL50-1/4XF	C 0288 A	39	633	655
Connector	Adaptor SMA male / N female	C 0306 A	46		
Connector	SMA male elbow for HPL50-1/4XF	C 0322 A			
Connector	SMA female bulkhead for HPL50-1/4XF	C 0323 A			
Connector	N male elbow for HPL50-1/4XF	C 0324 A			
Connector	N female bulkhead for HPL50-1/4XF	C 0325 A			
Connector	N male elbow for HPL50-3/8XF	C 0326 A			
Connector	N female bulkhead for HPL50-3/8XF	C 0327 A			
Connector	Adaptor SMA female / N male	C 0349 A	46		
Connector	TNC male for HPL50-3/8XF	C 0370 A			
Connector	TNC male elbow for HPL50-3/8XF	C 0371 A			
Grounding kit	KmT180°-1/4F & 3/8 XF	C 0270 A	48	319	319
Grounding kit	KmT180°-1/2F	C 0271 A	48	319	319
Grounding kit	Kmt 180° compact - 1/2F	C 0271 S	48		043
Grounding kit	KmT180°-7/8F	C 0272 A	48	319	319
Grounding kit	Kmt 180° compact - 7/8F	C 0272 S	48		043
Grounding kit	KmT180°-1 1/4F	C 0273 A	48	319	319
Grounding kit	Kmt 180° compact - 1-1/4F	C 0273 S	48		043

AST : ACOME Technical Specification
ANM : ACOME Assembly Instruction

Type	Product Description	Product code	Page	AST	ANM
Grounding kit	KmT180°-1 5/8F	C 0274 A	48	319	319
Grounding kit	Kmt 180° compact - 1-5/8F	C 0274 S	48		043
Grounding kit	KmT180°-3/8F	C 0291 A	48	319	319
Grounding kit	KmT 180°-5/8F	C 0292 A	48	319	319
Hangers	A4 / 2x1/2F	C 0109 A	50 - 51		
Hangers	A4 / 3 x1/2F	C 0110 A	50 - 51		
Hangers	A4 / 2x7/8F	C 0112 A	50 - 51		
Hangers	A4 / 3x7/8F	C 0113 A	50 - 51		
Hangers	A4 / 2x1-1/4F	C 0115 A	50 - 51		
Hangers	A4 / 3x1-1/4F	C 0116 A	50 - 51		
Hangers	A4 / 2x1-5/8F	C 0118 A	50 - 51		
Hangers	A4 / 3x1-5/8F	C 0119 A	50 - 51		
Hangers	M / 2x1/2F	C 0157 A	50 - 51		
Hangers	M / 3x1/2F	C 0158 A	50 - 51		
Hangers	M / 2x7/8F	C 0160 A	50 - 51		
Hangers	M / 3x7/8F	C 0161 A	50 - 51		
Hangers	M / 2x1-1/4F	C 0163 A	50 - 51		
Hangers	M / 3x1-1/4F	C 0164 A	50 - 51		
Hangers	M / 2x1-5/8F	C 0166 A	50 - 51		
Hangers	M / 3x1-5/8F	C 0167 A	50 - 51		
Hangers	Snap-on for HPL50-7/8F	C 0262 A	50 - 51		
Hangers	Snap-on for HPL50 -1-1/4F	C 0263 A	50 - 51		
Hangers	Snap-on for HPL50-1-5/8	C 0264 A	50 - 51		
Hangers	Snap-on for HPL50-1/2F	C 0265 A	50 - 51		
Hangers	Round tower members for HPL50-1-1/4F&1-5/8F	C 0317 A	50 - 51		
Hangers	Round tower members for HPL50-7/8F	C 0318 A	50 - 51		
Hangers	Round tower members for HPL50-1/2F	C 0319 A	50 - 51		
Hangers	A4 / 2x3/8F	C 0328 A	50 - 51		
Hangers	A4 / 2x5/8F	C 0329 A	50 - 51		
Hangers	A4 / 3x5/8F	C 0330 A	50 - 51		
Hangers	M / 2x5/8F	C 0331 A	50 - 51		
Hangers	M / 4x1/2F	C 0332 A	50 - 51		
Hoisting Grip	Stainless steel for HPL50-1/2F	C 0199 A	49		
Hoisting Grip	Stainless steel for HPL50-5/8F & 7/8F	C 0200 A	49		
Hoisting Grip	Stainless steel for HPL50-1-1/4F	C 0202 A	49		
Hoisting Grip	Stainless steel for HPL50-1-5/8F	C 0203 A	49		
Hoisting Grip	Stainless Steel for HPL50-1/2SF	C 0313 A	49		
Hoisting Grip	Stainless Steel with lace for HPL50-1-1/4F	C 0320 A	49		
Hoisting Grip	Stainless Steel with lace for HPL50-1-5/8F	C 0321 A	49		
Hoisting Grip	Stainless Steel with lace for HPL50-7/8F&5/8F	C 0356 A	49		
HPL50-	1/2F+PE	M 1473 Z	18 - 19	M1473Z	
HPL50-	7/8F+PE	M 1474 Z	22 - 23	M1474Z	
HPL50-	1/2SF+LSOH	M 2830 Z	34 - 35	M2830Z	
HPL50-	1/2F+LSOH	M 2831 Z	18 - 19	M2831Z	
HPL50-	7/8F+LSOH	M 2832 Z	22 - 23	M2832Z	
HPL50-	1/2SF+PE	M 2839 Z	34 - 35	M2839Z	
HPL50-	1/4SF+PE	M 2929 Z	30 - 31	M2929Z	
HPL50-	1/4F+PE	M 2930 Z	14 - 15	M2930Z	

AST : ACOME Technical Specification
ANM : ACOME Assembly Instruction

Type	Product Description	Product code	Page	AST	ANM
HPL50-	1/4SF+LSOH	M 2931 Z	30 - 31	M2931Z	
HPL50-	1/4F+LSOH	M 2932 Z	14 - 15	M2932Z	
HPL50-	3/8SF+PE	M 2933 Z	32 - 33	M2933Z	
HPL50-	3/8F+PE	M 2934 Z	16 - 17	M2934Z	
HPL50-	3/8SF+LSOH	M 2935 Z	32 - 33	M2935Z	
HPL50-	3/8F+LSOH	M 2936 Z	16 - 17	M2936Z	
HPL50-	1-1/4F+PE	M 2937 Z	24 - 25	M2937Z	
HPL50-	1-1/4F+LSOH	M 2938 Z	24 - 25	M2938Z	
HPL50-	1-5/8F+PE	M 2939 Z	26 - 27	M2939Z	
HPL50-	1-5/8F+LSOH	M 2940 Z	26 - 27	M2940Z	
HPL50-	5/8F+PE	M 5038 Z	20 - 21	M5038Z	
HPL50-	5/8F+LSOH	M 5039 Z	20 - 21	M5039Z	
HPL50-	1/4XF+PVC	M 5300 Z	38 - 39	M5300Z	
HPL50-	1/4SF+HFR	M 5302 Z	30 - 31	M5302Z	
HPL50-	3/8SF+HFR	M 5306 Z	32 - 33	M5306Z	
HPL50-	1/2SF+HFR	M 5308 Z	34 - 35	M5308Z	
HPL50-	1/4F+HFR	M 5309 Z	14 - 15	M5309Z	
HPL50-	3/8F+HFR	M 5310 Z	16 - 17	M5310Z	
HPL50-	3/8XF+PVC	M 5312 Z	38 - 39	M5312Z	
HPL50-	1/2F+HFR	M 5322 Z	18 - 19	M5322Z	
HPL50-	7/8F+HFR	M 5323 Z	22 - 23	M5323Z	
HPL50-	1/16XF+PVC	M 5330 Z	38 - 39	M5330Z	
HPL50-	1/16XF+HFR	M 5331 Z	38 - 39	M5331Z	
HPL50-	1/4XF+HFR	M 5332 Z	38 - 39	M5332Z	
HPL50-	3/8XF+HFR	M 5333 Z	38 - 39	M5333Z	
HPL50-	5/8F+HFR	M 5357 Z	20 - 21	M5357Z	
HPL50-	1-1/4F+HFR	M 5358 Z	24 - 25	M5358Z	
HPL50-	1-5/8F+HFR	M 5359 Z	26 - 27	M5359Z	
HPL50-	1/16XF+LSOH	M 5360 Z	38 - 39	M5360Z	
HPL50-	1/4XF+LSOH	M 5361 Z	38 - 39	M5361Z	
HPL50-	3/8XF+LSOH	M 5362 Z	38 - 39	M5362Z	
Install.tool	Stripping tool for HPL50-1/2SF	C 0007 A	47 - 35	665	263
Install.tool	Stripping tool for HPL50-1/2F (NV)	C 0008 C	47 - 19	381	264
Install.tool	Saw guide for HPL50-7/8F	C 0009 A	47 - 23	666	265
Install.tool	Saw guide for HPL50-1-1/4F	C 0010 A	47 - 25	667	359
Install.tool	Saw guide for HPL50-1-5/8F	C 0011 A	47 - 27	668	308
Install.tool	Stripping tool for HPL50-1/4F	C 0029 A	47 - 15		351
Install.tool	Stripping tool for HPL50-3/8F	C 0230 A	47 - 17		340
Install.tool	Stripping tool for HPL50-5/8F	C 0231 A	47 - 21		567
Install.tool	Stripping tool for HPL50-1/4SF	C 0233 A	47 - 31		267
Install.tool	Stripping tool for HPL50-3/8SF	C 0234 A	47 - 33		388
Install.tool	Cutting ring for HPL50-5/8F	C 0235 A	47 - 21		
Install.tool	Flaring tool for HPL50-7/8F	C 0314 A	47 - 23		
Install.tool	Flaring tool for HPL50-1-1/4F	C 0315 A	47 - 25		
Install.tool	Flaring tool for HPL50-1-5/8F	C 0316 A	47 - 27		
Install.tool	Stripping/flaring tool for HPL50-1-1/4F	C 0352 A	47 - 25	748	359
Install.tool	Stripping/flaring tool for HPL50-1-5/8F	C 0353 A	47 - 27	749	308
Install.tool	Stripping tool for HPL50-7/8F	C 0365 A	47 - 23		

AST : ACOME Technical Specification
ANM : ACOME Assembly Instruction

Type	Product Description	Product code	Page	AST	ANM
Jumper	7-16male / 7-16 male - length 100cm - 1/2F	J012FP-DMDM0100 D	42 - 43	B02	C0076*
Jumper	7-16male / 7-16 male - length 150cm - 1/2F	J012FP-DMDM0150 D	42 - 43	B02	C0017*
Jumper	7-16male / 7-16 male - length 200cm - 1/2F	J012FP-DMDM0200 D	42 - 43	B02	C0020*
Jumper	7-16male / 7-16 male - length 250cm - 1/2F	J012FP-DMDM0250 D	42 - 43	B02	C0077*
Jumper	7-16male / 7-16 male - length 300cm - 1/2F	J012FP-DMDM0300 D	42 - 43	B02	C0019*
Jumper	7-16male / 7-16 male - length 400cm - 1/2F	J012FP-DMDM0400 D	42 - 43	B02	C0250*
Jumper	7-16male / 7-16 male - length 500cm - 1/2F	J012FP-DMDM0500 D	42 - 43	B02	C0252*
Jumper	N male / N elbow - length 300cm - 1/2F	J012FP-NMNC0300 D	42 - 43		C0278*
Jumper	N male / N male - length 300cm - 1/2F	J012FP-NMNM0300 D	42 - 43		C0277*
Jumper	7-16male / 7-16 elbow - length 100cm - 1/2SF	J012SP-DMDC0100 D	42 - 43		C0256*
Jumper	7-16male / 7-16 elbow - length 150cm - 1/2SF	J012SP-DMDC0150 D	42 - 43		C0275*
Jumper	7-16male / 7-16 elbow - length 200cm - 1/2SF	J012SP-DMDC0200 D	42 - 43		C0255*
Jumper	7-16male / 7-16 elbow - length 300cm - 1/2SF	J012SP-DMDC0300 D	42 - 43		C0258*
Jumper	7-16male / 7-16 male - length 100cm - 1/2SF	J012SP-DMDM0100 D	42 - 43	B01	C0021*
Jumper	7-16male / 7-16 male - length 150cm - 1/2SF	J012SP-DMDM0150 D	42 - 43	B01	C0016*
Jumper	7-16male / 7-16 male - length 200cm - 1/2SF	J012SP-DMDM0200 D	42 - 43	B01	C0022*
Jumper	7-16male / 7-16 male - length 250cm - 1/2SF	J012SP-DMDM0250 D	42 - 43	B01	C0023*
Jumper	7-16male / 7-16 male - length 300cm - 1/2SF	J012SP-DMDM0300 D	42 - 43	B01	C0018*
Jumper	7-16male / 7-16 male - length 400cm - 1/2SF	J012SP-DMDM0400 D	42 - 43	B01	C0246*
Jumper	7-16male / 7-16 male - length 500cm - 1/2SF	J012SP-DMDM0500 D	42 - 43	B01	C0248*
Jumper	7-16 male / N elbow - length100cm - 1/2SF	J012SP-DMNC0100 D	42 - 43		C0312*
Jumper	7-16 male / N male - length100cm - 1/2SF	J012SP-DMNM0100 D	42 - 43		C0311*
Jumper	7-16 male / N male - length 150cm - 1/2SF	J012SP-DMNM0150 D	42 - 43		C0293*
Jumper	7-16 male / N male - length 200cm - 1/2SF	J012SP-DMNM0200 D	42 - 43		C0294*
Jumper	7-16 male / N male - length 300cm - 1/2SF	J012SP-DMNM0300 D	42 - 43		C0295*
Jumper	N male / N male - length 100cm - 1/2SF	J012SP-NMNM0100 D	42 - 43		C0024*
Jumper	N male / N male - length 150cm - 1/2SF	J012SP-NMNM0150 D	42 - 43		C0025*
Jumper	N male / N male - length 200cm - 1/2SF	J012SP-NMNM0200 D	42 - 43		C0026*
Jumper	N male / N male - length 250cm - 1/2SF	J012SP-NMNM0250 D	42 - 43		C0027*
Jumper	N male / N male - length 300cm - 1/2SF	J012SP-NMNM0300 D	42 - 43		C0028*
KE.	Weatherproofing Kit	C 0244 A	49		
Wall entries	Single entry Plate PMS0	C 0333 A	51		047
Wall entries	Dual entry Plate PMS2	C 0334 A	51		047
Wall entries	Multiple entry Plate PMS2x2	C 0335 A	51		047
Wall entries	Multiple entry Plate PMS2x3	C 0336 A	51		047
Wall entries	Sectorial boot GSR 1x1/4	C 0337 A	51		
Wall entries	Sectorial boot GSR 1x1/2	C 0338 A	51		
Wall entries	Sectorial boot GSR 1x7/8	C 0339 A	51		
Wall entries	Sectorial boot GSR 2x1/2	C 0340 A	51		
Wall entries	Sectorial blind boot GST90	C 0341 A	51		
Wall entries	Round boot GR 1x1.1/4	C 0342 A	51		
Wall entries	Round boot GR 1x1.5/8	C 0343 A	51		
Wall entries	Round boot GR 4x7/8F	C 0344 A	51		
Wall entries	Blind boot GT17	C 0345 A	51		
Wall entries	Blind boot GT28	C 0346 A	51		

AST : ACOME Technical Specification
ANM : ACOME Assembly Instruction

*previous reference

Product code	Type	Product Description	Page	AST	ANM
C 0001 A	Connector	7/16 female for HPL50-1/2F	45 - 19	678	264
C 0002 A	Connector	7/16 female for HPL50-7/8F	45 - 23	679	265
C 0003 C	Connector	7/16 female for HPL50-1-1/4F(NV)	45 - 25	684	359
C 0004 C	Connector	7/16 female for HPL50-1-5/8F (NV)	45 - 27	682	308
C 0005 A	Connector	7/16 male for HPL50-1/2SF	45 - 35	669	263
C 0006 A	Connector	7/16 male for HPL50-1/2F	45 - 19	677	264
C 0007 A	Install.tool	Stripping tool for HPL50-1/2SF	47 - 35	665	263
C 0008 C	Install.tool	Stripping tool for HPL50-1/2F (NV)	47 - 19	381	264
C 0009 A	Install.tool	Saw guide for HPL50-7/8F	47 - 23	666	265
C 0010 A	Install.tool	Saw guide for HPL50-1-1/4F	47 - 25	667	359
C 0011 A	Install.tool	Saw guide for HPL50-1-5/8F	47 - 27	668	308
C 0029 A	Install.tool	Stripping tool for HPL50-1/4F	47 - 15		351
C 0031 A	Connector	7-16 male elbow for HPL50-1/2SF	45 - 35	704	263
C 0032 A	Connector	7-16 female for HPL50-1/2SF	45 - 36	706	263
C 0033 A	Connector	7-16 male for HPL50-3/8SF	45 - 33		388
C 0034 A	Connector	7-16 male elbow for HPL50-3/8SF	45 - 33		388
C 0035 A	Connector	7-16 female for HPL50-3/8SF	45 - 33		388
C 0036 A	Connector	N male for HPL50- 1/4SF	45 - 31		267
C 0037 A	Connector	N male elbow for HPL50-1/4SF	45 - 31		267
C 0038 A	Connector	N female for HPL50-1/4SF	45 - 31		267
C 0039 A	Connector	N male for HPL50-3/8SF	45 - 33		388
C 0040 A	Connector	N male elbow for HPL50-3/8SF	45 - 33		388
C 0041 A	Connector	N female for HPL50-3/8SF	45 - 33		388
C 0042 A	Connector	N male for HPL50-1/2SF	45 - 35	708	263
C 0043 A	Connector	N male elbow for HPL50-1/2SF	45 - 35	712	263
C 0044 A	Connector	N female for HPL50-1/2SF	45 - 35	711	263
C 0045 A	Connector	N male for HPL50- 3/8XF	39		045
C 0046 A	Connector	7-16 male for HPL50-3/8XF	39		
C 0049 C	Connector	7-16 male for HPL50-1-1/4F(NV)	45 - 25	731	359
C 0050 A	Connector	7-16 male elbow for HPL50-1/2F	45 - 19	707	264
C 0051 A	Connector	7-16 female for HPL50-3/8F	45 - 17		340
C 0052 A	Connector	7-16 male elbow for HPL50-3/8F	45 - 17		340
C 0053 A	Connector	7-16 male for HPL50-3/8F	45 - 17		340
C 0054 C	Connector	7-16 male for HPL50-1-5/8F (NV)	45 - 27	753	308
C 0055 A	Connector	7-16 male for HPL50-7/8F	45 - 23	705	265
C 0056 A	Connector	N female for HPL50-1/4F	45 - 15		351
C 0057 C	Connector	N female for HPL50-1-1/4F (NV)	45 - 25		359
C 0058 C	Connector	N male for HPL50-1-1/4F (NV)	45 - 25		359
C 0059 A	Connector	N female for HPL50-1/2F	45 - 19	714	264
C 0060 A	Connector	N male elbow for HPL50-1/2F	45 - 19		264
C 0061 A	Connector	N male for HPL50-1/2F	45 - 19	709	264
C 0062 A	Connector	N female for HPL50-3/8F	45 - 17		340
C 0063 A	Connector	N male elbow for HPL50-3/8F	45 - 17		340
C 0064 A	Connector	N male for HPL50-3/8F	45 - 17		340
C 0065 A	Connector	N male elbow for HPL50-1/4F	45 - 15		351
C 0066 A	Connector	N male for HPL50-1/4F	45 - 15		351
C 0067 C	Connector	N female for HPL50-1-5/8F (NV)	45 - 27		308
C 0068 C	Connector	N male for HPL50-1-5/8F (NV)	45 - 27		308

AST : ACOME Technical Specification
ANM : ACOME Assembly Instruction

Product code	Type	Product Description	Page	AST	ANM
C 0069 A	Connector	N female for HPL50-7/8F	45 - 23	715	265
C 0070 A	Connector	N male for HPL50-7/8F	45 - 23	713	265
C 0079 A	Connector	EIA 7/8 for HPL50-1/2F	45 - 19		264
C 0080 A	Connector	SMA male for HPL50-1/16XF	39	686	
C 0081 A	Connector	SMA female bulkhead for HPL50-1/16XF	39		
C 0082 A	Connector	SMA male elbow for HPL50-1/16XF	39		
C 0083 A	Connector	SMA male for HPL50-1/4XF	39	648	
C 0084 A	Connector	Inner connector EIA 7/8	45		
C 0085 A	Connector	EIA 1-5/8 for HPL50-7/8F	45 - 23		265
C 0086 C	Connector	EIA 1-5/8 for HPL50-1-1/4F	45 - 25		359
C 0087 C	Connector	EIA 1-5/8 for HPL50-1-5/8F	45 - 27		308
C 0088 A	Connector	Inner connector EIA 1-5/8	45		
C 0089 A	Connector	Adaptor 7-16 female / N male	46		
C 0090 A	Connector	Adaptor 7-16 female / N female	46		
C 0091 A	Connector	Adaptor 7-16 male / N male	46		
C 0092 A	Connector	Adaptor 7-16 male / N female	46		
C 0093 A	Connector	Adaptor in serie 7-16 female/female	46		
C 0094 A	Connector	Adaptor in-serie N female / female	46		
C 0095 A	Connector	Adaptor in-serie N male / male	46		
C 0096 A	Connector	Adaptor in-serie elbow 7-16 male / female	46		
C 0097 A	Connector	Adaptor in-serie elbow N male / female	46		
C 0106 A	Connector	Adaptor EIA7/8 / N female	46		
C 0109 A	Hangers	A4 / 2x1/2F	50 - 51		
C 0110 A	Hangers	A4 / 3 x1/2F	50 - 51		
C 0112 A	Hangers	A4 / 2x7/8F	50 - 51		
C 0113 A	Hangers	A4 / 3x7/8F	50 - 51		
C 0115 A	Hangers	A4 / 2x1.1/4F	50 - 51		
C 0116 A	Hangers	A4 / 3x1.1/4F	50 - 51		
C 0118 A	Hangers	A4 / 2x1.5/8F	50 - 51		
C 0119 A	Hangers	A4 / 3x1.5/8F	50 - 51		
C 0157 A	Hangers	M / 2x1/2F	50 - 51		
C 0158 A	Hangers	M / 3x1/2F	50 - 51		
C 0160 A	Hangers	M / 2x7/8F	50 - 51		
C 0161 A	Hangers	M / 3x7/8F	50 - 51		
C 0163 A	Hangers	M / 2x1.1/4F	50 - 51		
C 0164 A	Hangers	M / 3x1.1/4F	50 - 51		
C 0166 A	Hangers	M / 2x1.5/8F	50 - 51		
C 0167 A	Hangers	M / 3x1.5/8F	50 - 51		
C 0199 A	Hoisting Grip	Stainless steel for HPL50-1/2F	49		
C 0200 A	Hoisting Grip	Stainless steel for HPL50-5/8F & 7/8F	49		
C 0202 A	Hoisting Grip	Stainless steel for HPL50-1-1/4F	49		
C 0203 A	Hoisting Grip	Stainless steel for HPL50-1-5/8F	49		
C 0208 A	Connector	N male for HPL50-5/8F	45 - 21		567
C 0209 A	Connector	N male elbow for HPL50-5/8F	45 - 21		567
C 0210 A	Connector	N female for HPL50-5/8F	45 - 21		567
C 0211 A	Connector	7-16 male for HPL50-5/8F	45 - 21		567
C 0212 A	Connector	7-16 female for HPL50-5/8F	45 - 21		567
C 0213 A	Connector	EIA 7/8 for HPL50-5/8F	45 - 21		567

AST : ACOME Technical Specification
ANM : ACOME Assembly Instruction

Product code	Type	Product Description	Page	AST	ANM
C 0214 A	Connector	EIA 7/8 elbow for HPL50-5/8F	45 - 21		567
C 0217 A	Connector	EIA 7/8 for HPL50-7/8F	45 - 23		265
C 0218 A	Connector	EIA 7/8 elbow for HPL50-7/8F	45 - 23		265
C 0219 C	Connector	EIA 7/8 for HPL50-1-1/4F	45 - 25		359
C 0220 C	Connector	EIA 7/8 for HPL50-1-5/8F	45 - 27		308
C 0227 A	Connector	EIA 7/8 for HPL50-3/8SF	45 - 33		
C 0228 A	Connector	EIA 7/8 for HPL50-1/2SF	45 - 35		263
C 0230 A	Install.tool	Stripping tool for HPL50-3/8F	47 - 17		340
C 0231 A	Install.tool	Stripping tool for HPL50-5/8F	47 - 21		567
C 0233 A	Install.tool	Stripping tool for HPL50-1/4SF	47 - 31		267
C 0234 A	Install.tool	Stripping tool for HPL50-3/8SF	47 - 33		388
C 0235 A	Install.tool	Cutting ring for HPL50-5/8F	47 - 21		
C 0244 A	KE.	Weatherproofing Kit	49		
C 0257 A	Connector	Adaptor in-serie 7-16 male / male	46		
C 0262 A	Hangers	Snap-on for HPL50-7/8F	50 - 51		
C 0263 A	Hangers	Snap-on for HPL50-1-1/4F	50 - 51		
C 0264 A	Hangers	Snap-on for HPL50-1-5/8	50 - 51		
C 0265 A	Hangers	Snap-on for HPL50-1/2F	50 - 51		
C 0270 A	Grounding kit	KmT180°-1/4F & 3/8 XF	48	319	319
C 0271 A	Grounding kit	KmT180°-1/2F	48	319	319
C 0271 S	Grounding kit	Kmt 180° compact-1/2F	48		043
C 0272 A	Grounding kit	KmT180°-7/8F	48	319	319
C 0272 S	Grounding kit	Kmt 180° compact-7/8F	48		043
C 0273 A	Grounding kit	KmT180°-1 1/4F	48	319	319
C 0273 S	Grounding kit	Kmt 180° compact-1-1/4F	48		043
C 0274 A	Grounding kit	KmT180°-1 5/8F	48	319	319
C 0274 S	Grounding kit	Kmt 180° compact-1-5/8F	48		043
C 0288 A	Connector	N male for HPL50-1/4XF	39	633	655
C 0291 A	Grounding kit	KmT180°-3/8F	48	319	319
C 0292 A	Grounding kit	KmT180°-5/8F	48	319	319
C 0306 A	Connector	Adaptor SMA male / N female	46		
C 0313 A	Hoisting Grip	Stainless Steel for HPL50-1/2SF	49		
C 0314 A	Install.tool	Flaring tool for HPL50-7/8F	47 - 23		
C 0315 A	Install.tool	Flaring tool for HPL50-1-1/4F	47 - 25		
C 0316 A	Install.tool	Flaring tool for HPL50-1-5/8F	47 - 27		
C 0317 A	Hangers	Round tower members for HPL50-1-1/4F&1-5/8F	50 - 51		
C 0318 A	Hangers	Round tower members for HPL50-7/8F	50 - 51		
C 0319 A	Hangers	Round tower members for HPL50-1/2F	50 - 51		
C 0320 A	Hoisting Grip	Stainless Steel with lace for HPL50-1-1/4F	49		
C 0321 A	Hoisting Grip	Stainless Steel with lace for HPL50-1-5/8F	49		
C 0322 A	Connector	SMA male elbow for HPL50-1/4XF			
C 0323 A	Connector	SMA female bulkhead for HPL50-1/4XF			
C 0324 A	Connector	N male elbow for HPL50-1/4XF			
C 0325 A	Connector	N female bulkhead for HPL50-1/4XF			
C 0326 A	Connector	N male elbow for HPL50-3/8XF			
C 0327 A	Connector	N female bulkhead for HPL50-3/8XF			
C 0328 A	Hangers	A4 / 2x3/8F	50 - 51		
C 0329 A	Hangers	A4 / 2x5/8F	50 - 51		

AST : ACOME Technical Specification
ANM : ACOME Assembly Instruction

Product code	Type	Product Description	Page	AST	ANM
C 0330 A	Hangers	A4 / 3x5/8F	50 - 51		
C 0331 A	Hangers	M / 2x5/8F	50 - 51		
C 0332 A	Hangers	M / 4x1/2F	50 - 51		
C 0333 A	Wall entries	Single entry Plate PMS0	51		047
C 0334 A	Wall entries	Dual entry Plate PMS2	51		047
C 0335 A	Wall entries	Multiple entry Plate PMS2x2	51		047
C 0336 A	Wall entries	Multiple entry Plate PMS2x3	51		047
C 0337 A	Wall entries	Sectorial boot GSR 1x1/4	51		
C 0338 A	Wall entries	Sectorial boot GSR 1x1/2	51		
C 0339 A	Wall entries	Sectorial boot GSR 1x7/8	51		
C 0340 A	Wall entries	Sectorial boot GSR 2x1/2	51		
C 0341 A	Wall entries	Sectorial blind boot GST90	51		
C 0342 A	Wall entries	Round boot GR 1x1.1/4	51		
C 0343 A	Wall entries	Round boot GR 1x1.5/8	51		
C 0344 A	Wall entries	Round boot GR 4x7/8F	51		
C 0345 A	Wall entries	Blind boot GT17	51		
C 0346 A	Wall entries	Blind boot GT28	51		
C 0349 A	Connector	Adaptor SMA female / N male	46		
C 0352 A	Install.tool	Stripping/flaring tool for HPL50-1-1/4F	47 - 25	748	359
C 0353 A	Install.tool	Stripping/flaring tool for HPL50-1-5/8F	47 - 27	749	308
C 0356 A	Hoisting Grip	Stainless Steel with lace for HPL50-7/8F & 5/8F	49		
C 0365 A	Install.tool	Stripping tool for HPL50-7/8F	47 - 23		
C 0370 A	Connector	TNC male for HPL50-3/8XF			
C 0371 A	Connector	TNC male elbow for HPL50-3/8XF			
J012FP-DMDM0100 D	Jumper	7-16male / 7-16 male - length 100cm - 1/2F	42 - 43	B02	C0076*
J012FP-DMDM0150 D	Jumper	7-16male / 7-16male - length 150cm - 1/2F	42 - 43	B02	C0017*
J012FP-DMDM0200 D	Jumper	7-16male / 7-16male - length 200cm - 1/2F	42 - 43	B02	C0020*
J012FP-DMDM0250 D	Jumper	7-16male / 7-16 male - length 250cm - 1/2F	42 - 43	B02	C0077*
J012FP-DMDM0300 D	Jumper	7-16male / 7-16male - length 300cm - 1/2F	42 - 43	B02	C0019*
J012FP-DMDM0400 D	Jumper	7-16male / 7-16 male - length 400cm - 1/2F	42 - 43	B02	C0250*
J012FP-DMDM0500 D	Jumper	7-16male / 7-16 male - length 500cm - 1/2F	42 - 43	B02	C0252*
J012FP-NMNC0300 D	Jumper	N male / N elbow - length 300cm - 1/2F	42 - 43		C0278*
J012FP-NMNM0300 D	Jumper	N male / N male - length 300cm - 1/2F	42 - 43		C0277*
J012SP-DMDC0100 D	Jumper	7-16male / 7-16 elbow - length 100cm - 1/2SF	42 - 43		C0256*
J012SP-DMDC0150 D	Jumper	7-16male / 7-16 elbow - length 150cm - 1/2SF	42 - 43		C0275*
J012SP-DMDC0200 D	Jumper	7-16male / 7-16 elbow - length 200cm - 1/2SF	42 - 43		C0255*
J012SP-DMDC0300 D	Jumper	7-16male / 7-16 elbow - length 300cm - 1/2SF	42 - 43		C0258*
J012SP-DMDM0100 D	Jumper	7-16male / 7-16male - length 100cm - 1/2SF	42 - 43	B01	C0021*
J012SP-DMDM0150 D	Jumper	7-16male / 7-16male - length 150cm - 1/2SF	42 - 43	B01	C0016*
J012SP-DMDM0200 D	Jumper	7-16male / 7-16male - length 200cm - 1/2SF	42 - 43	B01	C0022*
J012SP-DMDM0250 D	Jumper	7-16male / 7-16male - length 250cm - 1/2SF	42 - 43	B01	C0023*
J012SP-DMDM0300 D	Jumper	7-16male / 7-16male - length 300cm - 1/2SF	42 - 43	B01	C0018*
J012SP-DMDM0400 D	Jumper	7-16male / 7-16 male - length 400cm - 1/2SF	42 - 43	B01	C0246*
J012SP-DMDM0500 D	Jumper	7-16male / 7-16 male - length 500cm - 1/2SF	42 - 43	B01	C0248*
J012SP-DMNC0100 D	Jumper	7-16 male / N elbow - length100cm - 1/2SF	42 - 43		C0312*
J012SP-DMNM0100 D	Jumper	7-16 male / N male - length100cm - 1/2SF	42 - 43		C0311*
J012SP-DMNM0150 D	Jumper	7-16 male / N male - length 150cm - 1/2SF	42 - 43		C0293*
J012SP-DMNM0200 D	Jumper	7-16 male / N male - length 200cm - 1/2SF	42 - 43		C0294*

AST : ACOME Technical Specification
ANM : ACOME Assembly Instruction

*previous reference

HYPERCELL®

Numerical index

Product code	Type	Product Description	Page	AST	ANM
J012SP-DMNM0300 D	Jumper	7-16 male / N male - length 300cm - 1/2SF	42 - 43		C0295*
J012SP-NMNM0100 D	Jumper	N male / N male - length 100cm - 1/2SF	42 - 43		C0024*
J012SP-NMNM0150 D	Jumper	N male / N male - length 150cm - 1/2SF	42 - 43		C0025*
J012SP-NMNM0200 D	Jumper	N male / N male - length 200cm - 1/2SF	42 - 43		C0026*
J012SP-NMNM0250 D	Jumper	N male / N male - length 250cm - 1/2SF	42 - 43		C0027*
J012SP-NMNM0300 D	Jumper	N male / N male - length 300cm - 1/2SF	42 - 43		C0028*
M 1473 Z	HPL50-	1/2F+PE	18 - 19	M1473Z	
M 1474 Z	HPL50-	7/8F+PE	22 - 23	M1474Z	
M 2830 Z	HPL50-	1/2SF+LSOH	34 - 35	M2830Z	
M 2831 Z	HPL50-	1/2F+LSOH	18 - 19	M2831Z	
M 2832 Z	HPL50-	7/8F+LSOH	22 - 23	M2832Z	
M 2839 Z	HPL50-	1/2SF+PE	34 - 35	M2839Z	
M 2929 Z	HPL50-	1/4SF+PE	30 - 31	M2929Z	
M 2930 Z	HPL50-	1/4F+PE	14 - 15	M2930Z	
M 2931 Z	HPL50-	1/4SF+LSOH	30 - 31	M2931Z	
M 2932 Z	HPL50-	1/4F+LSOH	14 - 15	M2932Z	
M 2933 Z	HPL50-	3/8SF+PE	32 - 33	M2933Z	
M 2934 Z	HPL50-	3/8F+PE	16 - 17	M2934Z	
M 2935 Z	HPL50-	3/8SF+LSOH	32 - 33	M2935Z	
M 2936 Z	HPL50-	3/8F+LSOH	16 - 17	M2936Z	
M 2937 Z	HPL50-	1-1/4F+PE	24 - 25	M2937Z	
M 2938 Z	HPL50-	1-1/4F+LSOH	24 - 25	M2938Z	
M 2939 Z	HPL50-	1-5/8F+PE	26 - 27	M2939Z	
M 2940 Z	HPL50-	1-5/8F+LSOH	26 - 27	M2940Z	
M 5038 Z	HPL50-	5/8F+PE	20 - 21	M5038Z	
M 5039 Z	HPL50-	5/8F+LSOH	20 - 21	M5039Z	
M 5300 Z	HPL50-	1/4XF+PVC	38 - 39	M5300Z	
M 5302 Z	HPL50-	1/4SF+HFR	30 - 31	M5302Z	
M 5306 Z	HPL50-	3/8SF+HFR	32 - 33	M5306Z	
M 5308 Z	HPL50-	1/2SF+HFR	34 - 35	M5308Z	
M 5309 Z	HPL50-	1/4F+HFR	14 - 15	M5309Z	
M 5310 Z	HPL50-	3/8F+HFR	16 - 17	M5310Z	
M 5312 Z	HPL50-	3/8XF+PVC	38 - 39	M5312Z	
M 5322 Z	HPL50-	1/2F+HFR	18 - 19	M5322Z	
M 5323 Z	HPL50-	7/8F+HFR	22 - 23	M5323Z	
M 5330 Z	HPL50-	1/16XF+PVC	38 - 39	M5330Z	
M 5331 Z	HPL50-	1/16XF+HFR	38 - 39	M5331Z	
M 5332 Z	HPL50-	1/4XF+HFR	38 - 39	M5332Z	
M 5333 Z	HPL50-	3/8XF+HFR	38 - 39	M5333Z	
M 5357 Z	HPL50-	5/8F+HFR	20 - 21	M5357Z	
M 5358 Z	HPL50-	1-1/4F+HFR	24 - 25	M5358Z	
M 5359 Z	HPL50-	1-5/8F+HFR	26 - 27	M5359Z	
M 5360 Z	HPL50-	1/16XF+LSOH	38 - 39	M5360Z	
M 5361 Z	HPL50-	1/4XF+LSOH	38 - 39	M5361Z	
M 5362 Z	HPL50-	3/8XF+LSOH	38 - 39	M5362Z	

AST : ACOME Technical Specification
ANM : ACOME Assembly Instruction

*previous reference

HYPERCELL®

Conversion table

Return loss / Reflection Coefficient / VSWR

r	VSWR	R/L (dB)
0.005	1.010	46.0
0.010	1.020	40.0
0.015	1.030	36.5
0.020	1.041	34.0
0.025	1.051	32.0
0.030	1.062	30.5
0.035	1.073	29.1
0.040	1.083	28.0
0.45	1.094	26.9
0.050	1.105	26.0
0.060	1.128	24.4
0.070	1.151	23.1
0.080	1.174	21.9
0.090	1.198	20.9
0.100	1.222	20.0
0.110	1.247	19.2
0.120	1.273	18.4
0.130	1.299	17.7
0.140	1.326	17.1
0.150	1.353	16.5
0.160	1.381	15.9
0.170	1.410	15.4
0.180	1.439	14.9
0.190	1.439	14.9
0.200	1.500	14.0
0.210	1.532	13.6
0.220	1.564	13.2
0.230	1.597	12.8
0.240	1.632	12.4
0.250	1.667	12.0

VSWR	r	R/L (dB)
1.01	0.005	46.0
1.02	0.010	40.0
1.03	0.015	36.5
1.04	0.020	34.0
1.05	0.024	32.4
1.06	0.029	30.8
1.07	0.034	29.4
1.08	0.039	28.3
1.09	0.043	27.3
1.10	0.048	26.4
1.11	0.052	25.7
1.12	0.057	24.9
1.13	0.061	24.3
1.14	0.065	23.7
1.15	0.070	23.1
1.16	0.074	22.6
1.17	0.078	22.1
1.18	0.083	21.7
1.19	0.087	21.2
1.20	0.091	20.8
1.21	0.095	20.4
1.22	0.099	20.1
1.23	0.103	19.7
1.24	0.107	19.4
1.25	0.111	19.1
1.26	0.115	18.8
1.27	0.119	18.5
1.28	0.123	18.2
1.29	0.127	18.0
1.30	0.130	17.7

R/L (dB)	r	VSWR
10	0.316	1.925
11	0.282	1.785
12	0.251	1.671
13	0.224	1.577
14	0.200	1.499
15	0.178	1.433
16	0.159	1.377
17	0.141	1.329
18	0.126	1.288
19	0.112	1.253
20	0.100	1.222
21	0.089	1.196
22	0.079	1.173
23	0.071	1.152
24	0.063	1.135
25	0.056	1.119
26	0.050	1.106
27	0.045	1.094
28	0.040	1.083
29	0.036	1.074
30	0.032	1.065
31	0.028	1.058
32	0.025	1.052
33	0.022	1.046
34	0.020	1.041
35	0.018	1.036
36	0.016	1.032
37	0.014	1.029
38	0.013	1.026
39	0.011	1.023
40	0.010	1.020

Return Loss : $20 \log \frac{U_2}{U_1}$

Reflexion Coefficient : $r = \frac{U_2}{U_1}$

VSWR : $\frac{1+r}{1-r}$

U_2= Reflected Voltage Modulus
U_1= Incident Voltage Modulus

ACOME Factories

Mortain France
Xintai China
Irati Brazil

ACOME Offices

Germany
UK
Italy
Spain

ACOME Rep and distributors

Finland
Baltic Republics
Poland
Romania
Holland
Denmark
CIS
Sweden
Norway
Belgium
Lebanon
Groenland
Portugal
Chile
Korea
Malaysia
India
Thailand
Singapore
Mexico
Argentina
Greece
Turkey
Spain

Visit us on the internet at www.acome.com

ACOME

DIVISION RADIO VIDEOCOMMUNICATION - 52, rue du Montparnasse - 75014 Paris - France - Tel.: +(33) 1 42 79 14 00 - Fax: +(33) 1 42 79 15 00
E-Mail: DRDV@acome.fr - Site: www.acome.com

© ACOME - Réf. DRDV 12/2001 - 133 An - Conception-Realisation: P.I.C. +(33) 1 40 26 13 10 - Photo crédits : Imagebank, A. Becker - In the purpose to improve constatly the perforance of its products, ACOME reserves the right to modify and mentionned characterictics whitout prior notice
ACOME SCOP with a variable capital R.C.S. Paris B 562 123 513 - Siret 562 123 513 00011 - 14 rue de Marignan - 75008 Paris - France

PM 810/9-30

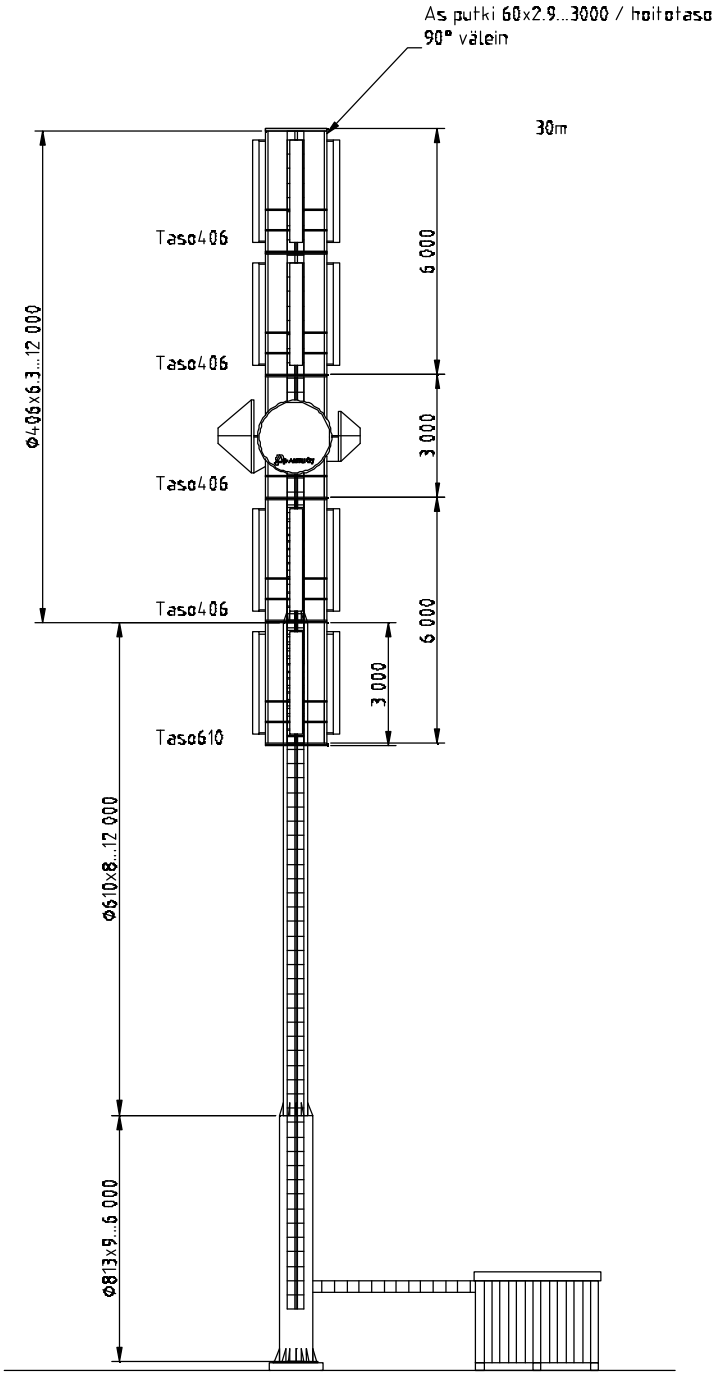

Aerial Oy
Box 22
04401 Järvenpää
Finland
Tel. +358 9 2790 120
Fax +358 9 2910 210
http://www.aerial.fi
aerial@aerial.fi

PM 610/8-30

Aerial Oy

Box 22
04401 Järvenpää
Finland

Tel. +358 9 2790 120
Fax +358 9 2910 210

http://www.aerial.fi
aerial@aerial.fi

PM 406/6-24

Aerial Oy

Box 22
04401 Järvenpää
Finland

Tel. +358 9 2790 120
Fax +358 9 2910 210

http://www.aerial.fi
aerial@aerial.fi

Gyued tube mast PM219-42

Aerial Oy

Box 22
04401 Järvenpää
Finland

Tel. +358 9 2790 120
Fax +358 9 2910 210

http://www.aerial.fi
aerial@aerial.fi

Al-mast 440/55-32

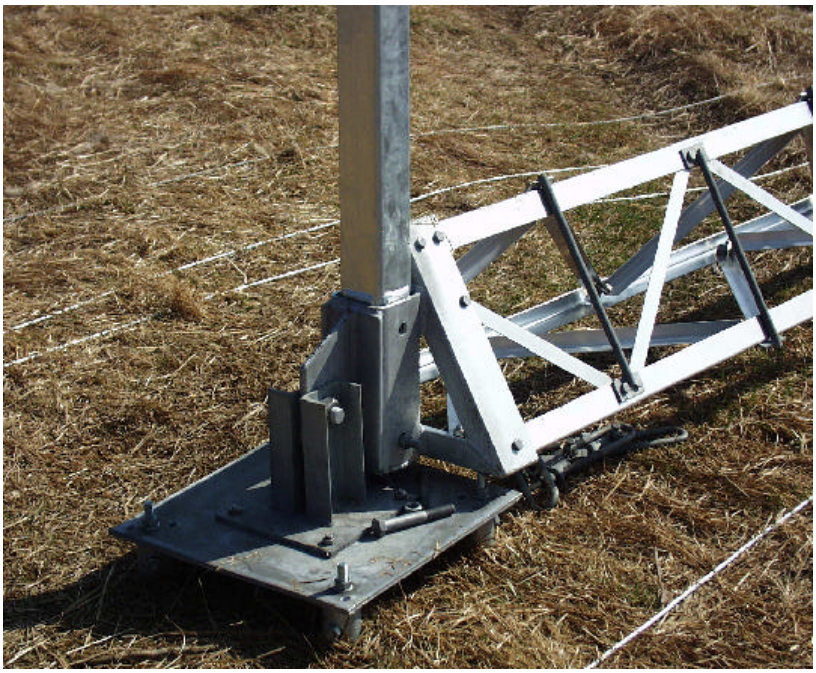

Aerial Oy

Box 22
04401 Järvenpää
Finland

Tel. +358 9 2790 120
Fax +358 9 2910 210

http://www.aerial.fi
aerial@aerial.fi

M2500/101-20

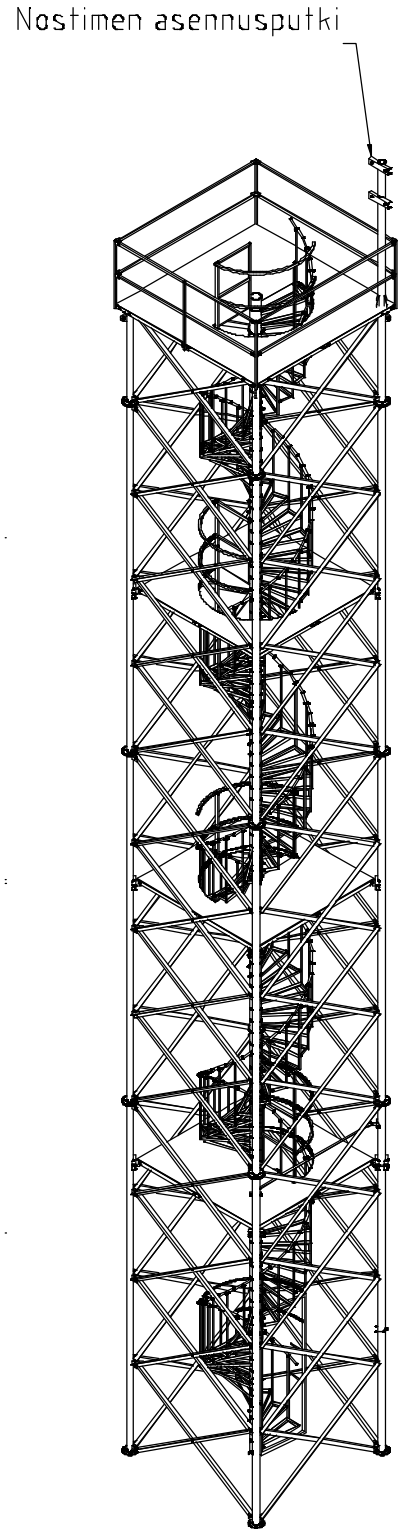

Aerial Oy

Box 22
04401 Järvenpää
Finland

Tel. +358 9 2790 120
Fax +358 9 2910 210

http://www.aerial.fi
aerial@aerial.fi

Tower 3000/89-22

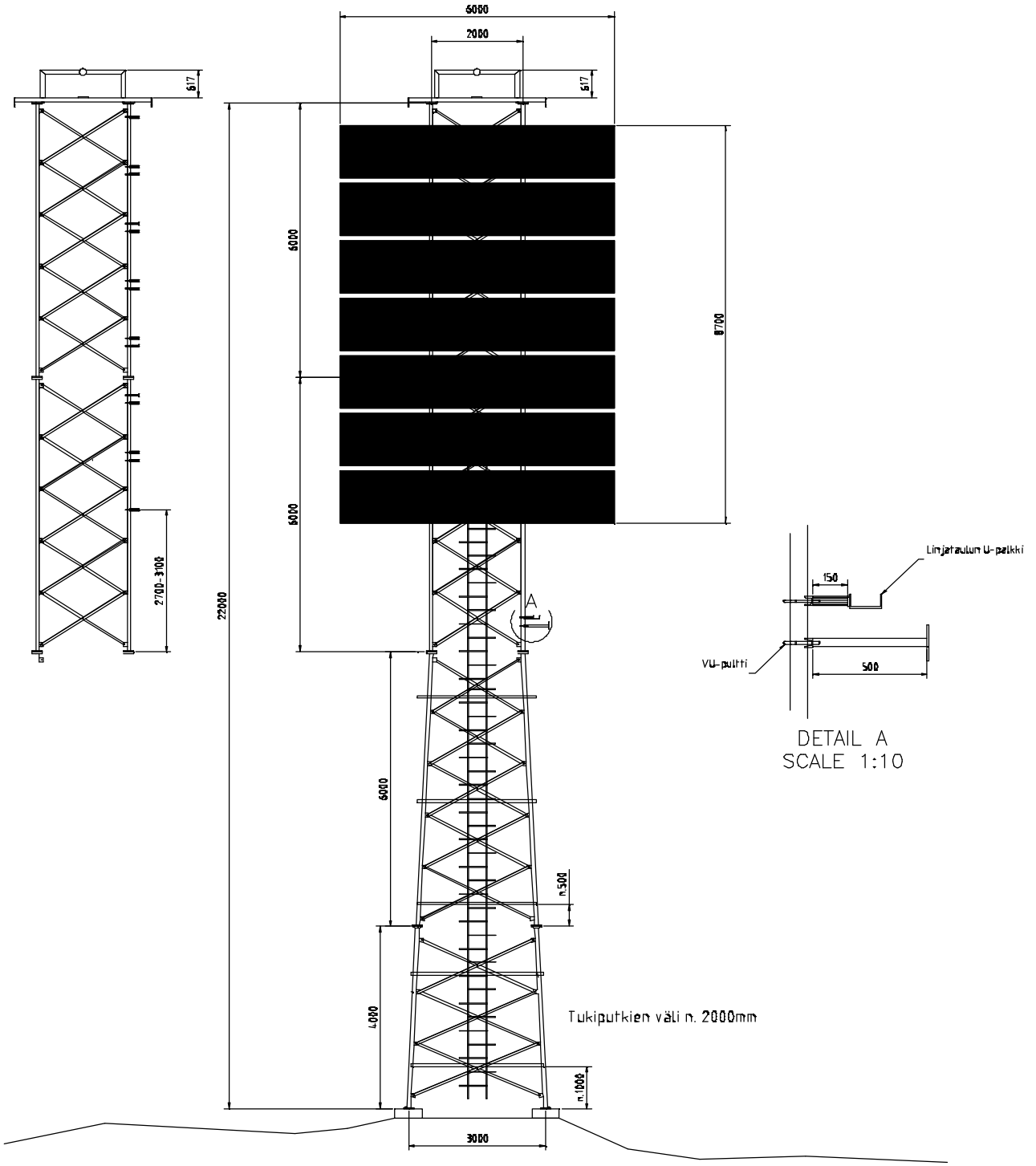

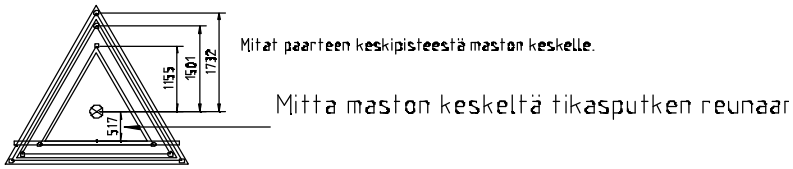

Aerial Oy
Box 22
04401 Järvenpää
Finland
Tel. +358 9 2790 120
Fax +358 9 2910 210
http://www.aerial.fi
aerial@aerial.fi

Mast 1200/76-10

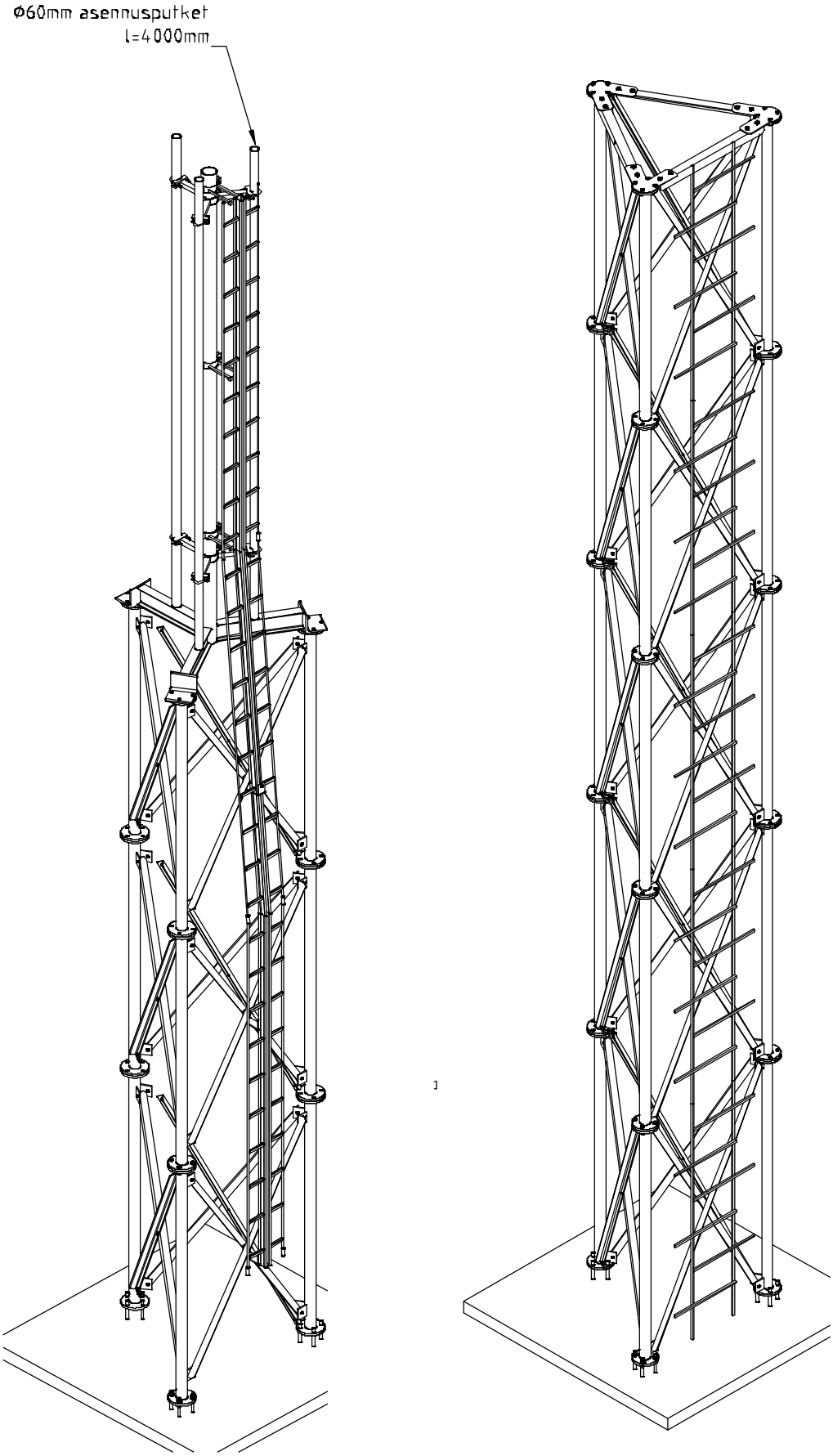

Aerial Oy
Box 22
04401 Järvenpää
Finland
Tel. +358 9 2790 120
Fax +358 9 2910 210
http://www.aerial.fi
aerial@aerial.fi

Bridge 1400/60-160m

Aerial Oy

Box 22
04401 Järvenpää
Finland

Tel. +358 9 2790 120
Fax +358 9 2910 210

http://www.aerial.fi
aerial@aerial.fi